(12) INTERNATIONAL APPLICATION PUBLISHED UNDER THE PATENT COOPERATION TREATY (PCT)

(19) World Intellectual Property Organization
International Bureau

(43) International Publication Date
30 January 2025 (30.01.2025)

WIPO | PCT

(10) International Publication Number
WO 2025/022331 A1

(51) International Patent Classification:
A24B 3/00 (2006.01) *B01D 53/02* (2006.01)
A24B 3/10 (2006.01) *B01D 53/04* (2006.01)
A24B 3/12 (2006.01) *B01D 51/10* (2006.01)
A24B 3/14 (2006.01)

(21) International Application Number:
PCT/IB2024/057187

(22) International Filing Date:
24 July 2024 (24.07.2024)

(25) Filing Language: English

(26) Publication Language: English

(30) Priority Data:
23386071.7 27 July 2023 (27.07.2023) EP

(71) Applicant: **PHILIP MORRIS PRODUCTS S.A.** [CH/CH]; Quai Jeanrenaud 3, 2000 Neuchâtel (CH).

(72) Inventors: **DI GIACOMO, Michele**; Avenue de Rhodanie 50, 1007 Lausanne (CH). **CARMONA FRANCO, Manuel Salvador**; C/ Altagracia, 50, 13071 Ciudad Real Ciudad Real (ES). **RODRÍGUEZ ROMERO, Juan Francisco**; C/ Altagracia, 50, 13071 Ciudad Real Ciudad Real (ES). **WĄS, Krzysztof**; C/ Altagracia, 50, 13071 Ciudad Real Ciudad Real (ES). **SARLIKIOTI, Vaia**; Avenue de Rhodanie 50, 1007 Lausanne (CH). **BAYUAJI, Bimo**; Jalan Rungkut Industri Raya No. 18, Surabaya, 60293 (ID).

(81) Designated States *(unless otherwise indicated, for every kind of national protection available)*: AE, AG, AL, AM, AO, AT, AU, AZ, BA, BB, BG, BH, BN, BR, BW, BY, BZ, CA, CH, CL, CN, CO, CR, CU, CV, CZ, DE, DJ, DK, DM, DO, DZ, EC, EE, EG, ES, FI, GB, GD, GE, GH, GM, GT, HN, HR, HU, ID, IL, IN, IQ, IR, IS, IT, JM, JO, JP, KE, KG, KH, KN, KP, KR, KW, KZ, LA, LC, LK, LR, LS, LU, LY, MA, MD, MG, MK, MN, MU, MW, MX, MY, MZ, NA, NG, NI, NO, NZ, OM, PA, PE, PG, PH, PL, PT, QA, RO, RS, RU, RW, SA, SC, SD, SE, SG, SK, SL, ST, SV, SY, TH, TJ, TM, TN, TR, TT, TZ, UA, UG, US, UZ, VC, VN, WS, ZA, ZM, ZW.

WO 2025/022331 A1

(54) Title: RECOVERING ALKALOIDS FROM TOBACCO DRYING PROCESSES

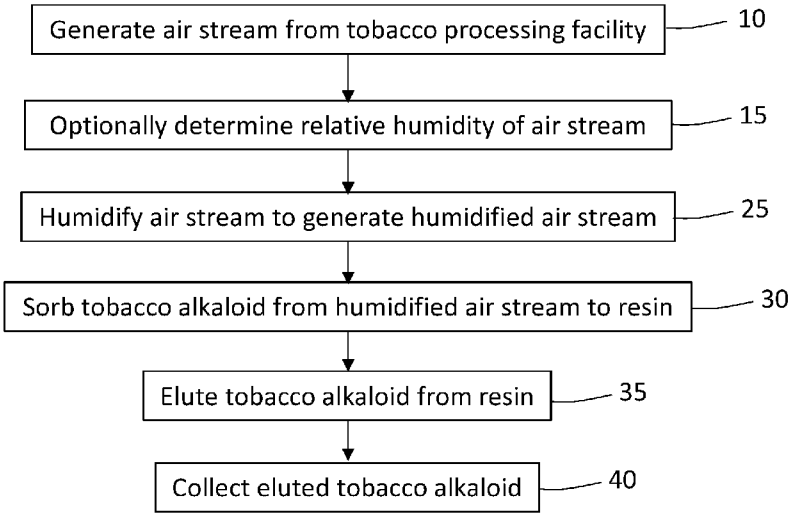

FIG. 1

(57) Abstract: A method for recovering tobacco alkaloids from an air stream from a tobacco processing facility includes generating a stream of air from the tobacco processing facility. The stream of air comprises the one or more tobacco alkaloids. The process includes humidifying the stream of air to generate a humidified air stream. The process further includes passing the humidified air stream across a first strong cation resin to sorb the one or more tobacco alkaloids and to generate a post-sorption air stream. The process further includes eluting the one or more tobacco alkaloids from the resin and collecting the eluted one or more tobacco alkaloids.

[Continued on next page]

(84) Designated States *(unless otherwise indicated, for every kind of regional protection available)*: ARIPO (BW, CV, GH, GM, KE, LR, LS, MW, MZ, NA, RW, SC, SD, SL, ST, SZ, TZ, UG, ZM, ZW), Eurasian (AM, AZ, BY, KG, KZ, RU, TJ, TM), European (AL, AT, BE, BG, CH, CY, CZ, DE, DK, EE, ES, FI, FR, GB, GR, HR, HU, IE, IS, IT, LT, LU, LV, MC, ME, MK, MT, NL, NO, PL, PT, RO, RS, SE, SI, SK, SM, TR), OAPI (BF, BJ, CF, CG, CI, CM, GA, GN, GQ, GW, KM, ML, MR, NE, SN, TD, TG).

Published:

— *with international search report (Art. 21(3))*
— *before the expiration of the time limit for amending the claims and to be republished in the event of receipt of amendments (Rule 48.2(h))*
— *in black and white; the international application as filed contained color or greyscale and is available for download from PATENTSCOPE*

RECOVERING ALKALOIDS FROM TOBACCO DRYING PROCESSES

The present disclosure relates to, among other things, processes and systems for recovering tobacco alkaloids, such as nicotine, from tobacco processing facilities.

Nicotine and other tobacco alkaloids are released to the atmosphere during the processing of tobacco. Recovery of the released tobacco alkaloids may reduce the amount of tobacco alkaloids released to the environmental, and the recovered tobacco alkaloids may be used in, among other things, tobacco or tobacco-derived products.

WO2022162564A1 discloses an environmentally advantageous process for recovering nicotine from condensed liquids captured from tobacco curing barns. The process of WO2022162564A1 includes passing the condensed liquid through an ion exchange column. However, condensing liquids requires cooling of exhaust air from the curing barns, which may require a substantial amount of energy and may make the process economically or financially unfeasible.

The present invention relates to processes and systems that provide for recovery of tobacco alkaloids from tobacco processing facilities in an energy-efficient manner.

According to aspects, the present invention provides a process for recovering one or more tobacco alkaloids from a tobacco processing facility. The process includes generating a stream of air from the tobacco processing facility. The stream of air comprises the one or more tobacco alkaloids. The process includes humidifying the stream of air to generate a humidified air stream. The process further includes passing the humidified air stream across a first strong cation exchange resin to sorb the one or more tobacco alkaloids and to generate a post-sorption air stream. The process further includes eluting the one or more tobacco alkaloids from the resin and collecting the eluted one or more tobacco alkaloids.

As demonstrated in the present disclosure, recovery yields of tobacco alkaloids from humidified air streams are surprisingly similar to yields from processes that cool air to condense liquids and recover the tobacco alkaloids from the condensed liquids. Advantageously, humidifying an air stream is more energy efficient than cooling air to condense liquids. As such, processes of the present invention may result in similar yields and may be more energy efficient than previously described processes for recovering tobacco alkaloids.

Due, at least in part, to the energy-efficient recovery of tobacco alkaloids, the processes and systems of the present invention may feasibly be applied to any suitable tobacco processing facilities in which tobacco is subjected to conditions that result in release of moisture containing a tobacco alkaloid from the tobacco. Processes in which moisture containing tobacco alkaloids are released from tobacco include processes in which the tobacco is subjected to heat and may include processes in which the tobacco is not subjected to heat. Processes in which moisture

containing tobacco alkaloids are released from tobacco may include tobacco drying processes. Tobacco drying processes include leaf drying processes, cut filler or cut rag drying processes, stem drying processes, and tobacco curing processes. Processes in which moisture containing tobacco alkaloids are released from tobacco may include cast leaf manufacturing processes, such as a cast leaf drying processes.

According to aspects, the present invention provides a system for recovering one or more tobacco alkaloids from a tobacco processing facility. The system comprises a fan to generate a stream of air comprising the one or more tobacco alkaloids. The system also comprises a humidifier to humidify the stream of air and to generate a humidified air stream. The system further comprises a first ion exchange column comprising a strong cation resin through which the humidified air stream may be passed to sorb the tobacco alkaloids.

Subjecting the sorbed tobacco alkaloids to further processing as described herein may result in recovery of high concentrations of the tobacco alkaloids. For example, nicotine may be recovered at concentrations of 70 percent by weight or greater, such as 75 percent by weight or greater. Such processes may result in little or no waste, with the main by-products being water and fertilizer.

Advantageously, the present invention may allow capture of tobacco alkaloids from tobacco processing facilities, such as processing facilities that dry the tobacco at elevated temperatures, in an environmentally friendly and energy efficient manner.

The systems and processes of the present disclosure include generating a stream of air from a tobacco processing facility. The stream of air comprises one or more tobacco alkaloid. Tobacco alkaloids, such as nicotine, are released from tobacco with water vapor at various stages of tobacco processing, such as processes in which the tobacco is subjected to heat. Processes in which tobacco is subjected to heat include tobacco drying processes. Tobacco drying processes include tobacco leaf drying processes, cut filler or cut rag drying processes, tobacco stem drying processes, and tobacco curing processes.

A system for recovering one or more tobacco alkaloids from a tobacco drying process may include components associated with tobacco drying. For example, the system may comprise a heater to heat air that contacts the tobacco. The system may comprise a fan to circulate air in contact with the tobacco. The system may comprise a heater and a fan to facilitate drying of the tobacco.

Tobacco may be heated in any suitable manner during a drying process. In some examples, air in contact with the tobacco during a drying process is heated to a temperature in a range from 40 degrees Celsius to 100 degrees Celsius, such as from 50 degrees Celsius to 100 degrees Celsius, from 60 degrees Celsius to 100 degrees Celsius, from 70 degrees Celsius to 100 degrees

Celsius, from 80 degrees Celsius to 100 degrees Celsius, or from 85 degrees Celsius to 100 degrees Celsius. The temperature may be varied during the drying process.

The tobacco alkaloids released together with water vapor from the tobacco during processing of the tobacco is entrained in an air stream. The air stream comprising the tobacco alkaloids may be generated in any suitable manner. In some examples, the air stream is generated by one or more fans. The fans may be positioned and configured to exhaust air from the tobacco processing facility to and across a first strong cation resin to sorb one or more tobacco alkaloids. A conduit may carry the air stream from the tobacco processing facility to an apparatus, such as an ion exchange column, comprising the first strong cation resin.

The air stream is humidified to generate a humidified air stream prior to being passed across the first strong cation resin. The air stream may be humidified in any suitable manner. For example, a humidifier may be used to introduce moisture to the air stream. In some embodiments a humidifier for adding moisture to the air stream includes a pump and a water source. The water may be pumped from a water source into the air stream. The water is preferably introduced into the air stream in droplets. Preferably, the water droplets are in the form of a fine spray or mist. Water droplets may be generated in any suitable manner. Preferably, the water enters the gas phase. Preferably, the water adiabatic humidifies the air. The air may supply the energy required for transforming the liquid water to vapor, which may decrease the temperature of the gas phase. The water droplets may be formed, by example, pumping water through a nozzle. In some examples, an atomizer may be used to generate water droplets. In some examples, the atomizer is a hydrolytic atomizer. In some examples, the atomizer is a pneumatic atomizer.

Preferably, the humidified air stream is saturated with water. Preferably, the humidified air stream does not contain an amount of water in excess of that needed to saturate the air stream. The system may comprise a hygrometer operatively coupled to, for example, a pump via a controller to adjust the amount of water added to the air stream. The pump may be coupled to a source of water and may be configured to pump the water into the air stream. To saturate the air stream with water, a sufficient amount of water may be added to the air stream. Excess water, if any, that does not remain in the air stream may extract one or more tobacco alkaloids from the air stream, diluting the concentration of the one or more tobacco alkaloids in the air stream. Accordingly, the amount of water added to the air stream should be just sufficient to saturate the air stream. Any excess water that may be added to the air stream and that comes out of the air stream may be passed across the strong cation resin.

A saturated humidified air stream may prevent drying of the strong cation resin, which may otherwise occur with passing air having elevated temperatures across the resin. Drying of the strong cation resin may inhibit penetration of tobacco alkaloids into the resin. A saturated air

stream may also ensure appropriate ionization of tobacco alkaloids in the air stream for efficient capture by the strong cation resin.

The humidity level of the air stream may be measured to determine how much moisture to be added to the air stream to saturate the humidified air stream with water. Any suitable humidity meter may be used to determine the level of humidity in the air stream. In some examples, a hygrometer is used to measure the humidity level. In some examples, the temperature and humidity of the air stream are measured to determine relative humidity and to determine the amount of water to be added to the air stream to saturate the air stream or the temperature to which the air stream should be cooled to saturate the air stream. A controller may be operably coupled to a pump configured to pump water from a source into the air stream. The humidity or relative humidity of the air stream may be determined by measuring humidity in the air stream or by measuring humidity in the tobacco processing facility from which the air stream is generated.

The humidity level or relative humidity of the humidified air stream may be measured to verify that the humidified air stream is saturated with water. If the humidified air stream is not saturated with water, the amount of water added to the air stream may be increased.

The concentration of tobacco alkaloid in the air stream or the humidified air stream may vary depending on, for example, the type of tobacco processed and the conditions in which the tobacco is processed. In some examples, the air stream or the humidified air stream may comprise from 10 parts per million nicotine to 5000 parts per million nicotine, such as from 50 parts per million nicotine to 4000 parts per million nicotine, such as from 100 parts per million nicotine to 3000 parts per million nicotine, or from 100 parts per million to 1500 parts per million.

The humidified air stream may be passed through a resin to sorb the tobacco alkaloid. Any suitable resin may be used to sorb the tobacco alkaloid. Preferably, the resin is a strong cation exchange resin. Any suitable strong cation exchange resin may be used. A strong cation exchange resin is a resin that attracts and retains cations with little or no variation in ion exchange capacity over a large pH range, such as from a pH of 1 to a pH of 14, such as from a pH of 2 to a pH of 12. A strong cation resin may comprise a strong acid functional group. For example, the strong cation resin may comprise a sulfonic group ($-SO_3^-$).

The resin may comprise any suitable substrate. The substrate may comprise a polymer. Preferably, the polymer is capable of being functionalized to contain a strong acid moiety. For example, the polymer may be functionalized to comprise a sulfonic group. In some examples, the resin comprises polystyrene. In some examples, the polystyrene is a polystyrene copolymer crosslinked with divinylbenzene.

Examples of commercially available strong cation resins that may be used to sorb tobacco alkaloids from the first aqueous solution are AMBERLITE™ IR-120, SR1L Na, IR-122 Na, and FPC23 H ion exchange resins; BESTION® BC120, BC121, and BC122 ion exchange resins;

LEWATIT® C 249 ion exchange resin; GC8 ion exchange resin available from ResinTech; and PUROLITE® C100 and C100E ion exchange resins.

Any suitable apparatus may comprise the strong cation resin. Preferably, an ion exchange column comprises the strong cation resin. The column may be packed with the resin, and the humidified air stream may be passed through the column so that the one or more tobacco alkaloids may sorb to the resin. Preferably, the resin in the column has sufficient capacity to sorb all the tobacco alkaloids from the humidified air stream. The sorption capacity of a resin in a column may depend on the degree of functionalization, such as the density of sulfonic groups, of the resin and the packing density or amount of resin in the column.

More than one column may be used to sorb the tobacco alkaloids from the humidified air stream. One or more valves and conduits may be used to divert the humidified air stream from a first column to a second column when, for example, a threshold has been met. The threshold may be determined by, for example, the cumulative amount of tobacco alkaloids in the humidified air stream that has passed through the first column, the concentration of a tobacco alkaloid in the post-sorption air stream after passing through the first column, the passage of a predetermined amount of time, or the like. As used herein, “post-sorption air stream" means an air stream after passing across a sorption resin or after passing through a column comprising a sorption resin.

Preferably, the flow of the humidified air stream is diverted from the first column to the second column before or when the first column has reached its tobacco alkaloid sorption capacity. In some examples, the flow of the humidified air stream is diverted from the first column to the second column soon after an increase in concentration of a tobacco alkaloid is detected in the post-sorption air stream. When the concentration of tobacco alkaloid in the post-sorption air stream begins to rise, it tends to rise rapidly. In some examples, the flow of the humidified air stream is diverted from the first column to the second column when the post-sorption air stream has a concentration of a tobacco alkaloid that is 15% or less than the concentration of the tobacco alkaloid in the humidified air stream before passing across the resin. In some examples, the column through which the humidified air stream is switched when the post-sorption air stream has a concentration of a tobacco alkaloid that is 14% or less, 13% or less, 12% or less, 11% or less, 10% or less, 9% or less, 8% or less, 7% or less, 6% or less, or 5% or less, 4% or less, 3% or less, 2% or less, or 1% or less than the concentration of the tobacco alkaloid in the humidified air stream before passing across the resin.

In some examples, the column through which the humidified air stream is passed is switched when the post-sorption air stream has a concentration of a tobacco alkaloid that meets or exceeds a threshold concentration. Any suitable concentration of tobacco alkaloid in the post-sorption air stream may be used as the threshold. In some examples, the threshold concentration of tobacco alkaloid in the post-sorption air stream is 500 parts per million (ppm) or less, such as

400 ppm or less, 300 ppm or less, 200 ppm or less, 100 ppm or less, 50 ppm or less, 40 ppm or less, 30 ppm or less, 20 ppm or less, 10 ppm or less, or 5 ppm or less. The threshold concentration of tobacco alkaloid in the post-sorption air stream will typically be 0.5 ppm or greater, such as 1 ppm or greater.

The concentration of a tobacco alkaloid in the post-sorption air stream may be determined in any suitable manner. In some examples, the post-sorption air stream is passed through or across a sensor configured to detect the concentration of the tobacco alkaloid. In some examples, the concentration of the tobacco alkaloid in the post-sorption air stream is spectrophotometrically determined. For example, the post-sorption air stream may pass through a conduit equipped with a spectrophotometer and a suitable source of light depending on the tobacco alkaloid being detected. In some examples, an infrared or near infrared spectrophotometer is used to detect nicotine. In some examples, nicotine concentrations may be measured at a wavelength from about 257 nanometers to about 261 nanometers, such as 258.5 nanometers or 259 nanometers.

It may be important to prevent condensation of water from the post-sorption air stream on a surface of a sensor, depending on the type of sensor employed to determine the concentration of the tobacco alkaloid in the post-sorption air stream. To prevent condensation, the post-sorption air stream may be heated, a surface of the sensor may be heated, or the post-sorption air stream and the surface of the sensor may be heated. The post-sorption air stream, the surface of the sensor, or both the post-sorption air stream and the surface of the sensor may be heated at a temperature of 100 degrees Celsius or greater, such as 120 degrees Celsius or greater, 140 degrees Celsius or greater, 160 degrees Celsius or greater, 170 degrees Celsius or greater, 180 degrees Celsius or greater, 190 degrees Celsius or greater, or 200 degrees Celsius or greater. The post-sorption air stream, the surface of the sensor, or both the post-sorption air stream and the surface of the sensor will generally be heated at a temperature of 250 degrees or less. In addition, or alternatively, a source of dry air may be combined with the post-sorption air stream upstream of the sensor to dilute the post-sorption air stream and reduce the humidity of the post-sorption air stream. The “dry” air has a relative humidity less than the post-sorption air stream to which the dry air is added. In some examples, the dry air has a relative humidity of 30 percent or less, 20 percent or less, 10 percent or less, or 5 percent or less. The dilution resulting from the source of dry air may be accounted for in determining the concentration of the tobacco alkaloid in post-sorption air stream.

When the concentration of the tobacco alkaloid in the post-sorption air stream is determined to meet or exceed a threshold, the flow of humidified air may be diverted from one column to another column. The ion exchange column through which the humidified air stream is passed may be manually switched or may be automatically switched.

The tobacco alkaloid concentration sensor may be operatively coupled with an alarm or other indicator to prompt a system engineer to manually switch the column through which the humidified air stream is passed. For example, the system engineer may actuate a valve or other suitable element to cause the humidified air stream to flow through a different column.

The tobacco alkaloid concentration sensor may be operatively coupled with a valve through, for example, a controller. The controller may cause actuation of the valve to cause the humidified air stream to flow through a different column.

The concentration of a tobacco alkaloid in the humidified air stream and the flow rate of the humidified air stream through the column may affect the time at which the humidified air stream should be diverted from one column to another. In some examples, the flow of the humidified air stream is diverted after a certain amount of time has passed regardless of the concentration of the tobacco alkaloid in the post-sorption air stream. The system may be configured such that an alarm or other indicator is provided to a system engineer to prompt the engineer to manually actuate a valve or other element to divert the flow of the humidified air stream from one column to another. In some examples, the system is configured such that a controller causes actuation of a valve to divert the flow of the humidified air stream from one column to another after the passage of a certain amount of time.

The humidified air stream may be flowed across the strong cation resin or through the column at any suitable flow rate. Slower flow rates tend to result in more efficient sorption of the tobacco alkaloids to the strong cation resin. At very low flow rates, the concentration of a tobacco alkaloid in the post-sorption air stream may remain close to zero for some time prior to relatively rapidly increasing. Higher flow rates allow for more rapid processing. To accommodate higher flow rates and maintain sorption efficiency, the cross-sectional area of the column may be increased. Accordingly, the flow rate of the humidified air stream through the column may depend on, among other things, column design and desired sorption efficiency.

In some examples, the humidified air stream is flowed across the strong cation resin or through the column at a liner flow rate from 5 centimetres per second to 50 centimetres per second, such from 10 centimetres per second to 30 centimetres per second, or 15 centimetres per second.

The one or more tobacco alkaloids sorbed to the strong cation resin may be eluted from the resin by passing a first aqueous solution comprising ammonium hydroxide through or across the resin to which the nicotine is sorbed. Ammonium ions are exchanged for the tobacco alkaloid to form a second aqueous solution comprising the tobacco alkaloid and ammonium hydroxide. The resin may be regenerated with, for example, nitric acid and washing with water. Washing the column with nitric acid results in an ammonium nitrate solution that may be used as a fertilizer, which may be treated to adjust pH.

While the tobacco alkaloid is eluted and the resin is regenerated, the humidified air flow may be stopped or diverted to another column so that the tobacco alkaloids may be sorbed by resin in the other column.

The ammonium hydroxide may be stripped from the second aqueous solution to provide a solution comprising one or more recaptured tobacco alkaloids. The stripped ammonium hydroxide may be fed into the regeneration and wash effluent to form fertilizer. The solution comprising the one or more recaptured tobacco alkaloids may be further processed.

The systems and processes described herein may be used to recapture any suitable tobacco alkaloid or tobacco alkaloids from a tobacco processing facility. Nicotine is typically the most abundant tobacco alkaloid in tobacco plants and parts of tobacco plants, such as leaves, stems, lamina, cut filler/cut rag. However, the processes described herein may also recapture other tobacco alkaloids including, for example, nornicotine, anatabine, and anabasine, nicotyrine, myosmine, 2,3-bipyridine, cotinine, nicotelline, and N-formylnornicotine. Preferably, the one or more tobacco alkaloids captured by the systems and methods of the present invention comprise, consist of, or consist essentially of nicotine, anatabine, or nicotine and anatabine.

For purposes of illustration, a more detailed discussion of recapture and processing of nicotine is provided below beginning with elution of the sorbed nicotine from the resin. However, it will be understood that one or more of the process steps described below may be applied to recapture of other tobacco alkaloids. It will also be understood that some process steps described below, such a thermostatic settling to concentrate nicotine, may not be effective or as effective for other tobacco alkaloids. It will be further understood that some process steps described below, such as ammonium hydroxide stripping, should be similarly effective for other tobacco alkaloids as for nicotine.

Regarding nicotine processing, the sorbed nicotine may be eluted from the resin by passing a first aqueous solution comprising ammonium hydroxide through or across the resin to which the nicotine is sorbed. Ammonium ions are exchanged for the nicotine to form a second aqueous solution comprising nicotine and ammonium hydroxide. The eluted nicotine in its neutral form at a pH value lower than 12.

The concentration of ammonium hydroxide in the first aqueous solution and the flow rate of the first aqueous solution through the resin are preferably suitable to result in a nicotine concentration in the second aqueous solution sufficient to cause separation of nicotine into high and low concentrations during subsequent settling. Preferably, the concentration of nicotine in the second aqueous solution is 1.3 percent by weight or greater. For example, the concentration of nicotine in the second aqueous solution may be from 2 percent by weight to 20 percent by weight. Preferably, the concentration of nicotine in the second aqueous solution is from 10 percent by weight to 20 percent by weight.

The concentration of ammonium hydroxide in the first aqueous solution may be from 2 percent by weight to 20 percent by weight, preferably from 5 percent by weight to 10 percent by weight. The flow rate of the first aqueous solution through or across the resin may depend on the concentration of the ammonium hydroxide. In some examples, the flow rate of the first aqueous solution through or across the resin is from 0.1 bed volumes per hour to 3 bed volumes per hour, such as from 0.5 bed volumes per hour to 2 bed volumes per hour. In some examples, the concentration of ammonium hydroxide in the first aqueous solution is from 5 percent by weight to 10 percent by weight, and the flow rate of the first aqueous solution through the resin is from 0.5 bed volumes per hour to 2 bed volumes per hour. Any suitable total volume of the first aqueous solution may be passed through the column or flowed across the resin to elute the tobacco alkaloids. A majority of the tobacco alkaloids may be eluted after passing three to five bed volumes of the first aqueous solution through the column or across the resin. In some embodiments, a total of 8 to 10 bed volumes of the first aqueous solution is passed through the column or flowed across the resin.

Ammonium hydroxide may be removed from the second aqueous solution in any suitable manner to produce a third aqueous solution comprising nicotine. Preferably, the ammonium hydroxide is removed from the second aqueous solution by an ammonia stripping process. Ammonium hydroxide is in equilibrium with ammonia in water according to the following equation: $NH_4^+ + OH^- \leftrightarrow H_20 + NH_3$. Accordingly, removal of ammonia (NH_3) from the second aqueous solution drives the equilibrium towards production of more ammonia and removes the ammonium hydroxide from the second aqueous solution.

Ammonia may be stripped from the second aqueous solution in any suitable manner. For example, the second aqueous solution may be contacted with a stream of gas in which ammonia is soluble. The stream of gas may comprise any suitable gas in which ammonia is soluble. In some examples, the gas is air or nitrogen (N_2).

The stream of gas may be contacted with the second aqueous solution in any suitable manner. For example, the stream of gas may be contacted with the second aqueous solution in a counter current or a crossflow manner.

For example, the second aqueous solution may be pumped into the top of a stripping column. The stripping column may be packed with appropriate material or objects, such as beads. In some examples, the column is filled with Raschig rings. The stream of gas may enter through openings in the bottom of the column. As droplets of the second aqueous solution fall through the column, the stream of gas may contact the droplets in a counter current manner and exit an opening in the top of the column to carry away ammonia. The solution may be fed continuously or recirculated one or more times through the column until a desired amount of ammonia is removed.

The second aqueous solution, the gas stream, or the second aqueous solution and the gas stream may be heated to facilitate ammonia stripping. Preferably, the second aqueous solution is heated. Preferably, the second aqueous solution is heated prior to being introduced into the stripping column. The second aqueous solution may be heated to any suitable temperature. In some examples, the second aqueous solution is heated to a temperature from 20 degrees Celsius to 60 degrees Celsius.

The solution coming off the stripping column may be recirculated through the stripping column or subsequent stripping column until the concentration of ammonium hydroxide is sufficiently reduced to produce the third aqueous solution comprising nicotine. The third aqueous solution may comprise some residual ammonium hydroxide. Preferably, the third aqueous solution is free of, or substantially free of, ammonium hydroxide. For example, the concentration of ammonium hydroxide in the third aqueous solution may be sufficiently low such that the third aqueous solution has a pH of 9.5 or less or 9 or less.

The third aqueous solution may then be incubated at a temperature in a range from 60 degrees Celsius to 210 degrees Celsius to cause the third aqueous solution to separate into a fourth aqueous solution comprising a first concentration of nicotine and a fifth aqueous solution comprising a second concentration of nicotine. The first concentration of nicotine is greater than the second concentration of nicotine. The third aqueous solution may be incubated in any suitable manner to cause separation. For example, the third aqueous solution may be introduced into a settler for incubation and separation. The third aqueous solution may be introduced into any suitable settler. A suitable settler may be any container where the third aqueous solution may calmly rest.

The temperature within the settler may be controlled in any suitable manner. For example, the settler may comprise heating elements, such as a heated water jacket or resistive or inductive heating elements, to control temperature within the settler. The heating elements may be in a container in which the third aqueous solution is held, may be external to the container in which the third aqueous solution is held, or may be in and external to the container in which the third aqueous solution is held. The temperature of the settler may be controlled with a water jacket surrounding the container in which the third solution is held. Heated water may flow through the water jacket to control the temperature within the container. For purposes of the present disclosure, a settler for which temperature may be controlled is a “thermostatic” settler.

Preferably, the third aqueous solution is incubated at a temperature in a range from 60.8 degrees Celsius to 208 degrees Celsius to cause separation. Preferably, the third aqueous solution is incubated at a temperature below 100 degrees Celsius More preferably, the third aqueous solution is incubated at a temperature in a range from 80 degrees Celsius to 100 degrees Celsius, such as in a range from 80 degrees Celsius to 90 degrees Celsius.

The third aqueous solution may be incubated at an appropriate temperature for any suitable period of time to cause separation into the fourth aqueous solution comprising the first concentration of nicotine and the fifth aqueous solution comprising the second concentration of nicotine. For example, the third aqueous solution may be incubated for 10 minutes or more. In some examples, the third aqueous solution is incubated at the appropriate temperature for a duration from 10 minutes to 120 minutes, such as from 10 minutes to 60 minutes, or from 15 minutes to 30 minutes.

A system may comprise more than one settler so that a second settler may be filled with the third aqueous solution while the third aqueous solution is incubating in a first settler.

The first concentration of nicotine in the fourth aqueous solution is greater than the concentration of nicotine in the third aqueous solution, and the second concentration of nicotine in the fifth aqueous solution is less than the concentration of nicotine in the third solution. The first concentration of nicotine may be 70 percent by weight or greater, such as 75 percent by weight or greater.

The fourth aqueous solution may be collected to recover a concentrated nicotine from the tobacco curing process. For example, the fourth aqueous solution may be removed from the settler. For example, the fourth aqueous solution may be removed from the bottom of the settler through a stopper valve.

The fifth aqueous solution comprising the second concentration of nicotine may be recycled within the process. For example, the fifth aqueous solution may be used as a source of water to humidity the air stream, may be returned to a settler to be separated again, or may be used as a source of water to humidity the air stream and returned to a settler to be separated again.

Some water may be evaporated from the fifth aqueous solution to concentrate the nicotine to a similar concentration as the third aqueous solution prior to returning the fifth aqueous solution to the settler. The fifth aqueous solution may be heated to facilitate evaporation and concentration of the nicotine.

A sixth aqueous solution comprising an acid may be passed through the strong cation resin to regenerate the resin. Once regenerated, the resin may be reused to sorb additional tobacco alkaloids from the humidified air stream. Any suitable acid may be used to regenerate the resin. Preferably, the acid reacts with ammonium to generate a fertilizer. Examples of acids that may react with ammonium to generate a fertilizer include nitric acid, sulfuric acid, and phosphoric acid.

The concentration of the acid, such as nitric acid, sulfuric acid, or phosphoric acid, in the sixth aqueous solution and the flow rate of the sixth aqueous solution through the resin are preferably suitable to completely, or nearly completely, regenerate the resin. In some examples,

the concentration of the acid, such as nitric acid, sulfuric acid, or phosphoric acid, in the sixth aqueous solution is from 1 percent by weight to 10 percent by weight, such as 5 percent by weight to 10 percent by weight, 3 percent by weight to 7 percent by weight, or 5 percent by weight. The flow rate of the sixth aqueous solution through the resin may depend on the concentration of the acid, such as nitric acid, sulfuric acid, or phosphoric acid. In some examples, the flow rate of the sixth aqueous solution through the resin is from 0.1 bed volumes per hour to 3 bed volumes per hour, such as from 0.5 bed volumes per hour to 3 bed volumes per hour. In some examples, the concentration of the acid, such as nitric acid, sulfuric acid, or phosphoric acid, in the sixth aqueous solution is from 5 percent by weight to 10 percent by weight, and the flow rate of the sixth aqueous solution through the resin is from 0.5 bed volumes per hour to 3 bed volumes per hour.

As the sixth aqueous solution is passed through the resin, proton ions (H^+) present in the sixth aqueous solution due to the acid may exchange with the ammonium ions that sorbed to the resin after passing the first aqueous solution through the resin to elute the nicotine. Thus, the resin may be regenerated. As the sixth aqueous solution is passed through the resin, the acid may react with the ammonium to produce a seventh aqueous solution comprising a fertilizer compound. For example, if the acid is nitric acid, sulfuric acid, or phosphoric acid, the fertilizer compound may be ammonium nitrate, ammonium sulphate, or ammonium phosphate. The seventh aqueous solution may be stored in a by-product tank. The seventh aqueous solution may be used as a fertilizer after adjusting pH if needed or desired.

The seventh aqueous solution may comprise excess acid, such as nitric acid, sulfuric acid, or phosphoric acid. The seventh aqueous solution comprising excess acid may be contacted with the gas stream comprising stripped ammonia. Contacting the seventh aqueous solution comprising excess acid with the gas comprising ammonia may result in removal of ammonia from the gas stream and production of additional fertilizer compound.

After regenerating the column with the sixth aqueous solution, the column may be rinsed with water to remove excess acid from the resin. The resulting aqueous solution may comprise residual acid. This resulting solution may be contacted with the gas stream comprising stripped ammonia.

The gas stream with ammonia removed may be recycled or collected for producing the solution comprising the fertilizer compound.

A system for recovering tobacco alkaloids from tobacco processing facilities may comprise any suitable components. The system may comprise a fan for generating an air stream from the tobacco processing facility. A fan is any suitable apparatus for moving air, such a blower. The

fan may include blades or may be bladeless. The air stream may comprise one or more tobacco alkaloid.

The system may comprise a humidifier to introduce moisture into the air stream or to cool the air stream to generate the humidified air stream. A humidifier may be any suitable apparatus for increasing absolute or relative humidity. In some examples, the humidifier comprises source of water and a pump operatively coupled to the source of water and configured to introduce the moisture into the air stream. The humidifier may comprise a nozzle, which may be an atomizing nozzle, through which the water is pumped to introduce the moisture to the air stream as fine droplets or a mist. In some examples, the humidifier comprises a cooler to reduce the temperature of the air stream to increase the relative humidity of the air stream. The system may comprise a humidity sensor positioned and configured to detect a humidity level or relative humidity of the air stream. The humidifier may be operatively coupled to the humidity sensor so that a sufficient amount of water may be added to the air stream, or the air stream may be sufficiently cooled, to saturate the humidified air stream with water.

The system may comprise an ion exchange column comprising a strong cation resin. The humidified air stream may be passed through the ion exchange column to sorb the one or more tobacco alkaloids.

The system may comprise source of an aqueous solution comprising ammonium hydroxide. The aqueous solution comprising ammonium hydroxide may be the first aqueous solution. The system may comprise a pump operatively coupled to the source of the aqueous solution comprising ammonium hydroxide and to the ion exchange column. The pump may be configured to pump the ammonium hydroxide solution through the resin to elute the one or more tobacco alkaloids from the resin. The solution comprising the eluted one or more tobacco alkaloids, as well as ammonium hydroxide, may be the second aqueous solution.

The system may comprise a stripping apparatus configured to receive an aqueous solution comprising the one or more tobacco alkaloids and the ammonium hydroxide that has passed through the resin. The stripping apparatus may be operatively couplable to a source of gas. The stripping apparatus and gas may be configured to remove ammonia evolved from the ammonium hydroxide in the aqueous solution comprising the nicotine and the ammonium hydroxide. The ammonia may be carried away in a stream of the gas.

The stripping apparatus may be configured such that the gas flows in a counter current manner or a crossflow manner relative to the aqueous solution comprising the one or more tobacco alkaloid and the ammonium hydroxide. The stripping apparatus may comprise a column packed with appropriate material or objects, such as beads. In some examples, the column is

filled with Raschig rings. In a counter current stripping apparatus, the stream of gas may enter through openings in the bottom of the column. As droplets of the second aqueous solution fall through the column, the stream of gas may contact the droplets in a counter current manner and exit an opening in the top of the column to carry away ammonia. The resulting aqueous solution exiting the stripping apparatus, from which the ammonia has been removed, may be the third aqueous solution.

The system may comprise a storage tank configured to receive the aqueous solution comprising the one or more tobacco alkaloid and the ammonium hydroxide that has passed through the resin. The system may comprise a pump operatively coupled to the storage tank and the stripping apparatus. The pump may be configured to pump the aqueous solution comprising the one or more tobacco alkaloid and the ammonium hydroxide from the storage tank to the stripping apparatus.

The system may comprise a thermostatic settler for concentrating one or more tobacco alkaloid, such as nicotine, amenable to thermostatic concentration. The thermostatic settler may be operably coupled to the stripping apparatus and configured to receive an aqueous solution exiting the stripping apparatus. The aqueous solution exiting the stripping apparatus comprises the one or more tobacco alkaloids eluted from the ion exchange column from which the ammonium hydroxide has been removed in the stripping apparatus. The thermostatic separator may be configured to incubate the aqueous solution comprising the eluted one or more tobacco alkaloids from which the ammonium hydroxide has been removed at a temperature between 60 degrees Celsius and 210 degrees Celsius to cause separation of the incubated aqueous solution into an aqueous solution comprising a first concentration of tobacco alkaloid, such as nicotine, and an aqueous solution comprising a second concentration of the one or more tobacco alkaloids. The first concentration of tobacco alkaloid is greater than the second concentration of the tobacco alkaloid. The aqueous solution comprising the first concentration of tobacco alkaloid may be collected to recover a concentrated tobacco alkaloid. The aqueous solution comprising the first concentration of tobacco alkaloid may be the fourth aqueous solution.

The system may further comprise a source of an aqueous solution comprising nitric acid. The system may comprise a pump operably couplable to the ion exchange column and the source of the aqueous solution comprising nitric acid. The pump may be configured to pump the aqueous solution comprising nitric acid through the strong cation resin. The nitric acid may elute ammonium from the resin to regenerate the resin. The nitric acid reacts with the ammonium to produce an aqueous solution comprising ammonium nitrate. The system may comprise by-product tank to which the aqueous solution comprising ammonium nitrate is directed. The aqueous solution comprising ammonium nitrate may be used as a fertilizer.

Components of the system may be made from any suitable material. Preferably, surfaces that contact the various aqueous solutions are compatible with the aqueous solutions. For example, compounds of the aqueous solutions preferably do not unintendedly react with surfaces of the system components that the aqueous solutions contact. Preferably, compounds of the aqueous solutions do not unintendedly sorb to surfaces of the system components that the aqueous solutions contact. Some plastic materials, such a polyethylene materials, polypropylene materials, and polyvinylchloride materials may sorb nicotine or other tobacco alkaloids. While such plastic material may be used for aqueous solutions contacting surfaces, such plastic materials are not preferred.

As used herein, the singular forms “a,” “an,” and “the” also encompass embodiments having plural referents, unless the content clearly dictates otherwise.

The words “preferred” and “preferably” refer to embodiments of the invention that may afford certain benefits, under certain circumstances. However, other embodiments may also be preferred, under the same or other circumstances. Furthermore, the recitation of one or more preferred embodiments does not imply that other embodiments are not useful and is not intended to exclude other embodiments from the scope of the disclosure, including the claims.

As used herein, “tobacco” means plant material, such as leaves, stems, or other portions of any of several plants belonging to the genus *Nicotiana*, such as of the species *N. tabacum*. Preferably, tobacco includes leaves, stems or leaves and stems.

As used herein, an “aqueous solution” is a composition comprising water that is fluid at 20 degrees Celsius. The composition may be a solution, suspension, or the like.

As used herein, “elution” is the process of extracting one material for another by washing with a solvent. An example of elution is the exchange of a first ion for a second ion on an ion-exchange resin by washing the resin with a solution comprising a solvent and the second ion, wherein the first ion is soluble in the solvent, and removal of the first ion from the column in the solvent.

As used herein, “sorption” refers to retention of a molecule or ion in a gas or liquid to a surface or in a bulk phase. Sorption includes adsorption, absorption, and retention by chemical reaction. A molecule or ion retained by chemical reaction may be eluted provided that a subsequent chemical reaction may release the molecule during the elution process.

As used herein, a “controller” is one or more hardware devices, one or more software or firmware programs, or one or more hardware devices and software or firmware programs that manages or directs flow of data between two or more entities. The controller may include a memory, an Application-Specific Integrated Circuit (ASIC) state machine, a digital signal

processor, a gate array, a microprocessor, or equivalent discrete or integrated logic circuitry. A controller may include memory that contains instructions that cause one or more components of the circuitry to carry out a function or aspect of the controller. Functions attributable to a controller in this disclosure may be embodied as one or more of software, firmware, and hardware. The controller may include a microprocessor. The operation of one or more controller of a system may be coordinated by an overarching system controller.

As used herein, “through” and “across” are used interchangeably in the context of passing or flowing an air stream relative to a resin in a manner that results in a tobacco alkaloid being sorbed by the resin from the air stream.

As used herein, “bed volume” of a column refers to the volume of resin in the column. For example, a column has a be volume of 20 litres if the column contains 20 litres of resin.

As used herein, “incubate” means to maintain under certain conditions for a period of time, preferably to produce an intended effect. For example, incubating an aqueous solution comprising a tobacco alkaloid at a temperature between 60 degrees Celsius and 210 degrees Celsius may include maintaining the aqueous solution within the temperature range for a sufficient period of time for the incubated solution to separate into an aqueous solution comprising a first concentration of a tobacco alkaloid and an aqueous solution comprising a second concentration of the tobacco alkaloid.

Below there is provided a non-exhaustive list of non-limiting examples. Any one or more of the features of these examples may be combined with any one or more features of another example, embodiment, or aspect described herein.

Example Ex1 A process for recovering one or more tobacco alkaloids from a tobacco processing facility, comprising: (i) generating an air stream from the tobacco processing facility, wherein the air stream comprises the one or more tobacco alkaloids; (ii) humidifying the air stream to generate a humidified air stream comprising the one or more tobacco alkaloids; (iii) passing the humidified air stream across a first strong cation resin to sorb the one or more tobacco alkaloids and to generate a post-sorption air stream; eluting the one or more tobacco alkaloids from the resin; and collecting the eluted one or more tobacco alkaloids.

Example Ex2 A process according to Ex1, wherein the humidified air stream is saturated with water.

Example Ex3 A process according to Ex1 or Ex2, further comprising detecting humidity of the air stream to determine an amount of moisture to add to the air stream to generate the humidified air stream.

Example Ex4 A process according to any one of Ex1 to Ex3, wherein the post-sorption air stream comprises a mixture of air that has passed across the first strong cation resin and air having a relative humidity less than the relative humidity of the air that has passed across the first strong cation resin.

Example Ex5 A process according to any one of Ex1 to Ex4, comprising detecting a concentration of a tobacco alkaloid in the post-sorption air stream.

Example Ex6 A process according to Ex5, comprising heating the post-sorption air stream before detecting the concentration of the tobacco alkaloid, as the concentration of the tobacco alkaloid is being detected, or before and as the concentration of the tobacco alkaloid is being detected.

Example Ex7 A process according to Ex5 or Ex6, wherein the concentration of the tobacco alkaloid in the post-sorption air stream is spectrophotometrically detected.

Example Ex8 A process according to any one of Ex4 to Ex7, comprising diverting the humidified air stream to a second strong cation resin if the detected concentration of the tobacco alkaloid in the post-sorption air steam meets or exceeds a threshold.

Example Ex9 A process according to any one of Ex1 to Ex8, wherein the tobacco processing facility is a stem drying facility, a leaf drying facility, a cutfiller/cutrag drying facility, or a curing barn.

Example Ex10 A process according to any one of Ex1 to Ex8, wherein the tobacco processing facility is a stem drying facility.

Example Ex11 A process according to any one of Ex1 to Ex10, further comprising heating tobacco in the tobacco processing facility to cause moisture comprising the one or more tobacco alkaloids to be released from the tobacco into the tobacco processing facility.

Example Ex12 A process according to any one of Ex1 to Ex11, wherein the one or more tobacco alkaloids comprise, consists or, or consists essentially of nicotine.

Example Ex13 A process according to any one of the Ex1 to Ex12, wherein eluting the one or more tobacco alkaloids from the first strong cation resin comprises passing a first aqueous solution comprising ammonium hydroxide across the first strong cation resin to which the one or more tobacco alkaloids are sorbed to elute the one or more tobacco alkaloids from the first strong cation resin to form a second aqueous solution comprising one or more tobacco alkaloids and ammonium hydroxide.

Example Ex14 A process according to Ex13, wherein collecting the eluted one or more tobacco alkaloids comprises collecting the second aqueous solution.

Example Ex15 A process according to Ex13, comprising removing ammonium hydroxide from the second aqueous solution to generate a third aqueous solution comprising one or more tobacco alkaloids.

Example Ex16 A process according to Ex15, wherein collecting the eluted one or more tobacco alkaloids comprises collecting the third aqueous solution.

Example Ex17 A process according to Ex15, comprising incubating the third aqueous solution at a temperature between 60 degrees Celsius and 210 degrees Celsius to cause the third aqueous solution to separate into a fourth aqueous solution comprising a first concentration of one or more tobacco alkaloids and a fifth aqueous solution comprising a second concentration of one or more tobacco alkaloids, wherein the first concentration of one or more tobacco alkaloids is greater than the second concentration of one or more tobacco alkaloids.

Example Ex18 A process according to Ex17, wherein the third aqueous solution is incubated at a temperature between 80 degrees Celsius and 150 degrees Celsius.

Example Ex19 A process according to Ex17 or Ex18, wherein collecting the eluted one or more tobacco alkaloids comprises collecting the fourth aqueous solution.

Example Ex20 A process according to any one of Ex13 to Ex19, comprising passing a sixth aqueous solution comprising nitric acid, sulfuric acid, or phosphoric acid through the first strong cation resin to regenerate the first strong cation resin and elute the ammonium hydroxide and to generate a seventh aqueous solution comprising ammonium nitrate, ammounium sulphate, or ammonium phosphate.

Example Ex21 A system for recovering one or more tobacco alkaloids from a tobacco processing facility, comprising: (i) a fan to generate an air stream comprising one or more tobacco alkaloids; (ii) a humidifier to humidify the stream of air and to generate a humidified air stream; and (iii) a first ion exchange column positioned and configured to allow passage of the humidified air stream therethrough, the first ion exchange column comprising a strong cation resin configured to sorb the one or more tobacco alkaloid from the humidified air stream as the humidified air stream passes through the first ion exchange column.

Example Ex22 A system according to Ex21, comprising: (i) a tobacco alkaloid detection sensor configured to detect the concentration of a tobacco alkaloid in a post-sorption air stream resulting from the humidified air stream passing through the first ion exchange column; (ii) a second ion exchange column positioned and configured to allow passage of the humidified air stream therethrough, the second ion exchange column comprising a strong cation resin configured to sorb the one or more tobacco alkaloid from the humidified air stream as the humidified air stream passes through the second ion exchange column; (iii) a valve operable to direct the humidified air stream through the first ion exchange column or the second ion exchange column; (iv) a controller operably coupled to the tobacco alkaloid detection sensor and the valve and configured to cause the humidified air stream to be directed through the

second ion exchange column if the detected concentration of the tobacco alkaloid meets or exceeds a threshold.

Example Ex23 A system according to Ex22, wherein the tobacco alkaloid detection sensor comprises a spectrophotometer.

Example Ex24 A system according to Ex22 or Ex23, comprising a heater configured to heat the post-sorption air stream upstream of, or at, the tobacco alkaloid detection sensor.

Example Ex25 A system according to any one of Ex21 to Ex24, comprising a first pump operatively couplable to a source of aqueous ammonium hydroxide and the first ion exchange column and configured to pump the aqueous ammonium hydroxide through the strong cation resin to elute the one or more tobacco alkaloids from the resin.

Example Ex26 A system according to Ex25, comprising a stripping apparatus configured to receive an aqueous solution comprising the one or more tobacco alkaloids and the ammonium hydroxide that has passed through the resin, wherein the stripping apparatus is operatively couplable to a source of gas, wherein the stripping apparatus and gas are configured to remove ammonia evolved from the ammonium hydroxide in the aqueous solution comprising the one or more tobacco alkaloids and the ammonium hydroxide, wherein the ammonia is carried away in a stream of the gas.

Example Ex27 A system according to Ex26, comprising a thermostatic settler operably coupled to the stripping apparatus and configured to receive an aqueous solution exiting the stripping apparatus, wherein the aqueous solution exiting the stripping apparatus comprises the one or more tobacco alkaloids eluted from the ion exchange column from which the ammonium hydroxide has been removed in the stripping apparatus, wherein the thermostatic settler is configured to incubate the aqueous solution comprising the eluted one or more tobacco alkaloids from which the ammonium hydroxide has been removed at a temperature between 60 degrees Celsius and 210 degrees Celsius to cause separation of the incubated aqueous solution into an aqueous solution comprising a first concentration of one or more tobacco alkaloids and an aqueous solution comprising a second concentration of one or more tobacco alkaloids, wherein the first concentration of one or more tobacco alkaloids is greater than the second concentration of one or more tobacco alkaloids.

Examples will now be further described with reference to the figures in which:

FIGS. 1-3 are flow diagram illustrating methods according to embodiments of the present invention;

FIG. 4 is schematic block diagram illustrating a system according to an embodiment of the present invention;

FIGS. 5-7 are a schematic block diagrams of a systems that may be used with the system of **FIG. 4** according to embodiments of the present invention;

FIGS. 8-9 are schematic drawings of bench-top systems developed to simulate a humidified air stream from a tobacco processing facility in which the humidified air stream comprises nicotine;

FIG. 10 is a graph of nicotine concentration in an air stream over time after the air stream exited a column with and without a strong cationic resin to capture nicotine in the air stream;

FIG. 11 is a graph of nicotine concentration in an air stream over time after the air stream was passed through a column with a strong cationic resin at different flow rates;

FIG. 12 is a graph of nicotine concentration in an air stream over time after the air stream was passed through a column with a strong cationic resin to capture the nicotine;

FIG. 13 is a graph of nicotine concentration in a strong cationic column as increased bed volumes of ammonium hydroxide solution are used to elute the nicotine from the column; and

FIG. 14 is a graph showing the capacity of a strong cationic resin to sorb nicotine after several rounds of elution with ammonium hydroxide solution and regeneration with nitric acid solution.

FIG. 1 illustrates an overview of a method according to an embodiment of the present invention. The method includes generating an air stream from a tobacco processing facility (**10**). Air in the tobacco processing facility comprises one or more tobacco alkaloid, and thus the air stream comprises one or more tobacco alkaloid. The tobacco processing facility may be a facility in which tobacco is heated to enhance release of the one or more tobacco alkaloid into the air of the processing facility. The tobacco processing facility may be a stem drying facility, a leaf drying facility, a cut filler/cut rag drying facility, or a curing barn. The tobacco processing facility may be a cast leaf manufacturing facility. The cast leaf manufacturing facility may be equipped to perform cast leaf drying. The method may optionally include determining the relative humidity (**15**) of the air stream. Determining the relative humidity of the air stream may include determining the temperature and humidity level of the air stream. The method includes humidifying the air stream to generate a humidified air stream (**25**). The amount of moisture added to the air stream may be determined or controlled by the relative humidity of the air stream. Preferably, a sufficient amount of moisture is added to the air stream to saturate the humidified air stream with water. The method further includes sorbing the one or more tobacco alkaloid in the humidified air stream to a resin (**30**). The resin may be in an ion exchange column, and the humidified air stream may be flowed through the column. The resin may be a strong cation resin. The method also includes eluting the one or more tobacco alkaloid from the resin (**35**) and collecting the one or more eluted tobacco resin (**40**).

FIG. 2 illustrates an overview of a method similar to that shown in **FIG. 1**. Steps **10**, **15**, **25**, and **30** in **FIG. 2** are the same as in **FIG. 1** and are not further specifically described regarding **FIG. 2**. In the method of **FIG. 2**, the one or more tobacco alkaloid is eluted from the resin with a

solution comprising ammonium hydroxide (**36**). Ammonium ions will replace the one or more tobacco alkaloid on the resin, and the solution comprising the eluted tobacco alkaloid will comprise excess ammonium hydroxide. The ammonium hydroxide may be stripped from the eluted aqueous solution comprising the one or more tobacco alkaloid (**45**). An ammonia stripping column may be used to strip ammonia, which results in removal of ammonium hydroxide, in a stream of gas. The aqueous solution comprising the one or more tobacco alkaloid, from which the ammonium hydroxide has been removed, may be collected (**50**).

The process of **FIG. 2** may also include regenerating the resin with an aqueous solution comprising nitric acid (**55**) which results in the exchange for proton ions for ammonium ions and regeneration of the resin. The regenerated resin may then be used to sorb one or more tobacco alkaloid (**30**) from additional humidified air stream (**25**). Passing an aqueous solution comprising nitric acid through the resin results in the production of ammonium nitrate (**65)** due to reaction of the ammonium with nitric acid. The produced ammonium nitrate may be collected (**70**) and used as fertilizer. The regenerated resin may be washed with water (**60**) to remove excess acid and lower the pH prior to the resin being reused. The water wash (**60**) may result in a solution comprising a low concentration of nitric acid.

A gas stream carrying ammonia from the stripping step (**45**) may be contacted with the resulting water solution from the water wash step (**60**) or resulting solution from the nitric acid resin regeneration step (**55**), which may produce additional ammonium nitrate (**65**) and remove ammonia from the gas stream prior to the gas stream being recycled or released to atmosphere. This may also deplete residual nitric acid.

As a result of the process depicted in **FIG. 2**, an aqueous solution comprising one or more tobacco alkaloid may be collected (**125**) from an air stream from a tobacco processing facility with an aqueous solution comprising ammonium nitrate (**70**), which may be used as a fertilizer, as a by-product with little or no other waste produced. Thus, the process provides an environmentally friendly way to capture one or more tobacco alkaloid from a tobacco processing facility without a substantial consumption of energy as may be required with processes that utilize condensed liquid rather than humidified air streams.

FIG. 3 illustrates an overview of a method similar to that shown in **FIG. 1**. Steps **10**, **15**, **25** in **FIG. 3** are the same as in **FIG. 1** and are not further specifically described regarding **FIG. 3**. In **FIG. 3**, the one or more tobacco alkaloid in the humidified air stream comprises nicotine. The nicotine from the humidified air stream is sorbed to the resin (**31**) and is eluted from the resin with an aqueous solution comprising ammonium hydroxide (**37**). Ammonium ions will replace the nicotine on the resin, and the solution comprising the eluted nicotine will comprise excess ammonium hydroxide. The ammonium hydroxide may be stripped from the eluted aqueous solution comprising the one or more tobacco alkaloid (**45**). An ammonia stripping column may be

used to strip ammonia, which results in removal of ammonium hydroxide, in a stream of gas. The aqueous solution comprising the nicotine, from which the ammonium hydroxide has been removed, may be settled to allow nicotine phase separation (**75**). When settled at an appropriate temperature, the nicotine will separate into a concentrated nicotine phase and a less concentrated aqueous phase. The high concentration nicotine phase is collected (**85**).

The low concentration nicotine phase may be recycled within the process (**80**). For example, an aqueous solution comprising the low concentration nicotine phase may be resettled to cause further phase separation (**75**), may be used to humidify the air stream (**25**), may be collected and pumped through a strong cation resin to sorb the nicotine to the resin (**37**), or may be reintroduced at any other suitable step of the process. If the concentration of the aqueous solution comprising the low concentration nicotine phase is not sufficiently high to settle, some of the water may be evaporated to concentrate the nicotine prior to resettling.

The process of **FIG. 3** also includes regenerating the resin with an aqueous solution comprising nitric acid (**55**) which results in the exchange for hydronium ions for ammonium ions and regenerated the resin. The regenerated resin may then be used to sorb addition nicotine (**37**) from the humidified air stream. Passing an aqueous solution comprising nitric acid through the resin results in the production of ammonium nitrate (**65)** due to reaction of the ammonium with nitrate. The produced ammonium nitrate may be collected (**70**) and used as fertilizer. The regenerated resin may be washed with water (**60**) to remove excess acid and lower the pH prior to the resin being reused. The water wash (**60**) may result in a solution comprising a low concentration of nitric acid.

A gas stream carrying ammonia from the stripping step (**46**) may be contacted with the resulting water solution from the water wash step (**60**) or resulting solution from the nitric acid resin regeneration step (**55**), which may produce additional ammonium nitrate (**65**) and remove ammonia from the gas stream prior to the gas stream being recycled or released to atmosphere. This may also deplete residual nitric acid.

As a result of the process depicted in **FIG. 3**, an aqueous solution comprising high concentration nicotine may be collected (**85**) from an air stream from a tobacco processing facility with an aqueous solution comprising ammonium nitrate (**70**), which may be used as a fertilizer, as a by-product with little or no other waste produced. Thus, the process provides an environmentally friendly way to capture high concentration from a tobacco processing facility without a substantial consumption of energy as may be required with processes that utilize condensed liquid rather than humidified air streams.

FIG. 4 illustrates an overview of a system **200A** configured to sorb one or more tobacco alkaloid from air in a tobacco processing facility. The system **200A** includes one or more fans **300** to generate an air stream from the tobacco processing facility, a humidifier to introduce water into

the air stream and produce a humidified air stream. The humidifier comprises a source of water **310**, a pump **320**, and a valve or nozzle **330**. The pump **320** is configured to pump water from the source **310** through the nozzle **330** to introduce the water into the air stream. The system **200A** depicted in **FIG. 4** includes a humidity sensor **350** to sense the relative humidity of the air stream or humidified air stream. The humidity sensor **350** may be operatively coupled to a controller **340** configured to control the amount of water added to the air stream to ensure that the humidified air stream is saturated with water. The controller **340** may be operatively coupled to a valve or nozzle **330** or the pump **320** to control the amount of water added to the air stream. The system further comprises a first ion exchange column **230** and a second ion exchange column **231** through with the humidified air stream may flow. The first **230** and second **231** ion exchange columns contain strong cation resins configured to bind one or more tobacco alkaloids. The post-sorption air stream (the air stream that has passed through the first **230** or second **231** column) may be released to the external atmosphere or recycled.

The system **200A** in **FIG. 4** includes a tobacco alkaloid detection sensor **380** configured to detect a concentration of a tobacco alkaloid in the post-sorption air stream. The sensor **380** is operatively coupled to a controller **380** that is operatively coupled to a valve **360** configured to direct the flow of the humidified air stream through the first **230** or second **231** ion exchange column. If the concentration of the tobacco alkaloid in the post sorption air stream after leaving the first ion exchange column **230**, as measured by sensor **380**, meets or exceeds a threshold, controller **370** will cause valve **360** to divert flow of the humidified air stream through the second ion exchange column **231**. Such diversion of the humidified air stream ensures that the concentration of the tobacco alkaloid in the post-sorption air stream, which may be released to the external environment, is low.

While the humidified air stream flows through the second column, the tobacco alkaloid may be eluted from the first column and the first column may be regenerated.

FIG. 5 illustrates a system **200B** for eluting and collecting the tobacco alkaloid and regenerating the resin. The system **200B** of **FIG. 5** may be used in connection with the system **200A** shown in **FIG. 4** and includes the first **230** and second **231** ion exchange columns. The system **200B** of **FIG. 5** includes storage containers **202**, **203**, **241**, and **250**, and pumps **211** and **212**. Storage container **202** contains an aqueous solution comprising ammonium hydroxide. Pump **211** is configured to pump solution comprising ammonium hydroxide through the first **230** or second **231** ion exchange column and to storage container **250** where the eluted tobacco alkaloid may be stored. Valves **223**, **220**, and **221** direct the flow of the ammonium hydroxide solution through either the first **230** or second **231** ion exchange column and to storage container **250**. After the tobacco alkaloid is eluted from either the first **230** or second **231** ion exchange column, the column may be regenerated.

In **FIG. 5**, storage container **203** contains an aqueous solution comprising nitric acid. Pump **212** is configured to pump solution comprising nitric acid through the first **230** or second **231** ion exchange column to regenerate the strong cation resins in the column. As the nitric acid solution passes through the resin, proton ions are exchanged for ammonium ions, the ammonium ions are eluted, and the resulting solution is stored in container **241**. The resulting solution comprises ammonium nitrate produced from a reaction of nitric acid with the aqueous ammonia and may contain excess nitric acid. The solution stored in container **241** may be used as fertilizer. Valves **224**, **220**, and **221** direct the flow of the nitric solution through either the first **230** or second **231** ion exchange column and direct the resulting solution to storage container **241**.

FIG. 6 illustrates a system **200B** containing components of the system **200B** shown in **FIG. 5** and also containing components that may be used for stripping ammonium hydroxide from the solution in storage container **250**, which contains the eluted tobacco alkaloid. The components that are similar between **FIG. 5** and **FIG. 6** are components for elution and regeneration of the columns **230**, **231**. Reference is made to the discussion regarding **FIG. 5** for those common components that are not specifically discussed regarding **FIG. 6**.

In the system **200B** of **FIG. 6**, pump **213** is operatively coupled to the storage container **250** and is configured to pump the solution comprising ammonium hydroxide and the tobacco alkaloid through heat exchanger **280**, which heats the solution, and to the ammonia stripping column **260**. As the solution passes through the ammonia stripping column **260**, a stream of gas from source storage container **204** contacts the solution to remove ammonia, which generates an aqueous solution comprising the tobacco alkaloid with reduced ammonium hydroxide, which is stored in container **240**.

As illustrated in **FIG. 6**, the stream of gas containing ammonia that exits the stripping column **260** may be brough into contact with the solution resulting from regeneration of the resin from container **241** so that the ammonia in the gas stream may react with excess nitric acid in the solution to produce additional ammonium nitrate. Thus, ammonium in the gas stream may be depleted prior to venting the gas stream to the environment, and excess nitric acid in the solution resulting from regeneration of the resins may be depleted prior to using the aqueous ammonium nitrate as fertilizer.

FIG. 7 illustrates a system **200B** containing components of the system **200B** shown in **FIG. 6** and also containing components that may be used for concentrating a tobacco alkaloid, such as nicotine. The components that are similar between **FIG. 7** and **FIG. 6** are components for elution and regeneration of the columns **230**, **231** and stripping of ammonia. Reference is made to the discussion regarding **FIG. 5** and **FIG. 6** for those common components that are not specifically discussed regarding **FIG. 7**.

The system **200B** of **FIG. 7** includes a thermostatic settler **270**. The solution comprising the eluted tobacco alkaloid, such as nicotine, that has been passed through the ammonia stripping column **260** may flow to the thermostatic settler **270**. The solution in the thermostatic settler **270** is incubated for a sufficient time at a sufficient temperature to separate into a high concentration tobacco alkaloid (e.g., nicotine) solution and a low concentration tobacco alkaloid (e.g., nicotine) solution. The high concentration tobacco alkaloid solution is collected in product storage container **240**.

Pump **214** is operatively coupled to the thermostatic settler and is configured to pump the low concentration tobacco alkaloid solution to a storage container **201**. Pump **210** in connection with valve **222** is configured to cause the low concentration tobacco alkaloid solution to flow through the first **230** or second **231** ion exchange columns to sorb the tobacco alkaloid, which may be processed as described above regarding processing of tobacco alkaloid sorbed from the humidified air stream.

Non-limiting examples illustrating sorption and recapture of nicotine from an air stream employing various steps of methods of the invention are provided below. The non-limiting examples reflect initial experimental testing to illustrate proof of concept of one or more aspects of the invention.

Examples

1. Simulation of air stream from tobacco processing facility

Bench scale systems were developed to generate an air stream comprising nicotine to determine if an ion exchange column comprising a strong cation resin can sorb the nicotine from the air stream. Multiple systems were developed to produce a humid air stream comprising nicotine. Two examples are shown schematically in **FIG. 8** and **FIG. 9**. **FIG. 8** shows a heated jack column in which an aqueous nicotine solution contacts air to produce a humid air stream comprising nicotine. The humid air stream comprising nicotine produce by a system as shown in **FIG. 8** was passed through an ion exchange column comprising a strong cation resin and nicotine was effectively recovered from the column, demonstrating that it was possible to recover nicotine from the vapour phase without condensation.

In the system shown in **FIG. 9**, dry air is pumped through a fixed volume of aqueous nicotine solution to produce a humid air stream comprising nicotine. The system shown in **FIG. 9** was more efficient and controllable than the system in **FIG. 8**.

2. Measuring nicotine sorption from air stream

Water-saturated air comprising nicotine (generated as discussed in Example 1) was flowed through an ion exchange bed column of AMBERLITE™ IRC120 H strong cation resin at

various flow rates. The post-sorption air stream was condensed at +0.1 degrees Celsius to form a liquid from which nicotine concentrations were determined.

In a preliminary study, nicotine concentrations were determined when flowed through a column with and without resin. Results are presented in **FIG. 10**. As shown in **FIG. 10**, the concentration of nicotine in the collected samples was 2200 ppm as indicated by the concentration with no resin. With resin the initial concentration of nicotine in the post-ion exchanged saturated air stream was approximately zero, demonstrating that the resin was able to remove efficiently the nicotine from the vapour phase. As time progressed and the resin approached its saturation capacity, the concentration of nicotine in the post- treated air stream increased.

Additional experiments were conducted with humidified air streams comprising 700 ppm, 1000 ppm, and 1500 ppm nicotine with similar results (data not shown), demonstrating that a strong cation resin is capable of capturing nicotine at both low and high concentrations from the vapour phase.

FIG. 11 shows concentrations of nicotine in a condensate of the post-sorption air stream after passing through the ion exchange column at different flow rates. As expected, at lower flow rates (1.5 litres per minute) breakthrough concentrations were seen later than with higher flow rates (2.5 litres per minute).

FIG. 12 shows a detailed illustration of nicotine concentration change in post-sorption air stream over time.

Once saturation of the column is reached, the column may be treated with ammonium hydroxide solution to elute the nicotine as described herein or as described in for example, published PCT application no. WO 2022162564A1, as illustrated in **FIG. 13**.

Materials:

AMBERLITE™ IRC120 H	IRC120 H is a strong acid cation exchange resin. This resin has been used in the treatment of the vapor gas to capture resin
Ammonia solution	Necessary for the nicotine elution from the resin.
Nitric acid	Necessary for resin regeneration and preparation
Pure water	As nitric acid and ammonia are sold in high concentration, pure water source is necessary for their dilution, and washing of the resin after regeneration.

The robustness of the process has been checked several times, observing that the column can be reused for alkaloid removal in a new step without loss of the resin capacity after the column is regenerated (**FIG. 14**). The sorption capacity observed and shown in **FIG. 14** is similar, but overall slightly lower, than sorption capacity observed when nicotine was flowed across the resin in an aqueous solution.

Thus, the ability to capture nicotine from a saturated air stream with a strong cationic resin has been shown. Ammonia stripping and concentration of nicotine should also be possible without undue experimentation.

3. Tobacco alkaloid capture from relatively dry air stream

Experiments using relatively dry air stream have been carried out (data not shown). Air with a relative humidity of 22 to 25 percent at 90 to 95 degrees Celsius, containing 540 parts per million of nicotine was passed at a flow rate of 1 litre/minute (of dry air at 25 degrees Celsius) through a resin bed column having a volume of 4.0 millilitres, which was maintained at a temperature of 90 to 95 degrees Celsius. After 5 hours of testing, the concentration in the gas phase did not substantially vary, indicating that the resin was not able to remove the nicotine from dry environments. Without intending to be bound by theory, it is believed that higher moisture levels are required to form a layer of a water around the resin bead or nicotine which allows the diffusion of the mixture nicotine-water to the internal part of the beads, promoting the nicotine uptake.

For the purpose of the present description and of the appended claims, except where otherwise indicated, all numbers expressing amounts, quantities, percentages, and so forth, are to be understood as being modified in all instances by the term "about". Also, all ranges include the maximum and minimum points disclosed and include any intermediate ranges therein, which may or may not be specifically enumerated herein. In this context, therefore, a number A is understood as A ± 2% of A. Within this context, a number A may be considered to include numerical values that are within general standard error for the measurement of the property that the number A modifies. The number A, in some instances as used in the appended claims, may deviate by the percentages enumerated above provided that the amount by which A deviates does not materially affect the basic and novel characteristic(s) of the claimed invention. Also, all ranges include the maximum and minimum points disclosed and include any intermediate ranges therein, which may or may not be specifically enumerated herein.

CLAIMS

1. A process for recovering one or more tobacco alkaloids from a tobacco processing facility, comprising:

generating an air stream from the tobacco processing facility, wherein the air stream comprises the one or more tobacco alkaloids;

humidifying the air stream to generate a humidified air stream comprising the one or more tobacco alkaloids;

passing the humidified air stream across a first strong cation resin to sorb the one or more tobacco alkaloids and to generate a post-sorption air stream;

eluting the one or more tobacco alkaloids from the resin; and

collecting the eluted one or more tobacco alkaloids.

2. A process according to claim 1, wherein the humidified air stream is saturated with water.

3. A process according to claim 1 or 2, further comprising detecting humidity of the air stream to determine an amount of moisture to add to the air stream to generate the humidified air stream.

4. A process according to any one of claims 1 to 3, wherein the post-sorption air stream comprises a mixture of air that has passed across the first strong cation resin and air having a relative humidity less than the relative humidity of the air that has passed across the first strong cation resin.

5. A process according to any one of claims 1 to 4, comprising detecting a concentration of a tobacco alkaloid in the post-sorption air stream.

6. A process according to claim 5, comprising heating the post-sorption air stream before detecting the concentration of the tobacco alkaloid, as the concentration of the tobacco

alkaloid is being detected, or before and as the concentration of the tobacco alkaloid is being detected.

7. A process according to claim 5 or 6, wherein the concentration of the tobacco alkaloid in the post-sorption air stream is spectrophotometrically detected.

8. A process according to any one of claims 4 to 7, comprising diverting the humidified air stream to a second strong cation resin if the detected concentration of the tobacco alkaloid in the post-sorption air steam meets or exceeds a threshold.

9. A process according to any one of claims 1 to 8, wherein the tobacco processing facility is a stem drying facility, a leaf drying facility, a cut filler/cut rag drying facility, a curing barn, or a cast leaf manufacturing facility.

10. A process according to any one of claims 1 to 8, wherein the tobacco processing facility is a stem drying facility.

11. A process according to any one of claims 1 to 10, further comprising heating tobacco in the tobacco processing facility to cause moisture comprising the one or more tobacco alkaloids to be released from the tobacco into the tobacco processing facility.

12. A process according to any one of claims 1 to 11, wherein the one or more tobacco alkaloids comprise, consists or, or consists essentially of nicotine.

13. A process according to any one of claims 1 to 12, wherein eluting the one or more tobacco alkaloids from the resin comprises flowing 8 to 10 bed volumes of an aqueous solution comprising ammonium hydroxide across the resin.

14. A system for recovering one or more tobacco alkaloids from a tobacco processing facility, comprising:

a fan to generate an air stream comprising one or more tobacco alkaloids;

a humidifier to humidify the stream of air and to generate a humidified air stream; and

a first ion exchange column positioned and configured to allow passage of the humidified air stream therethrough, the first ion exchange column comprising a strong cation resin configured to sorb the one or more tobacco alkaloid from the humidified air stream as the humidified air stream passes through the first ion exchange column.

15. A system according to claim 14, comprising:

a tobacco alkaloid detection sensor configured to detect the concentration of a tobacco alkaloid in a post-sorption air stream resulting from the humidified air stream passing through the first ion exchange column;

a second ion exchange column positioned and configured to allow passage of the humidified air stream therethrough, the second ion exchange column comprising a strong cation resin configured to sorb the one or more tobacco alkaloid from the humidified air stream as the humidified air stream passes through the second ion exchange column;

a valve operable to direct the humidified air stream through the first ion exchange column or the second ion exchange column;

a controller operably coupled to the tobacco alkaloid detection sensor and the valve and configured to cause the humidified air stream to be directed through the second ion exchange column if the detected concentration of the tobacco alkaloid meets or exceeds a threshold.

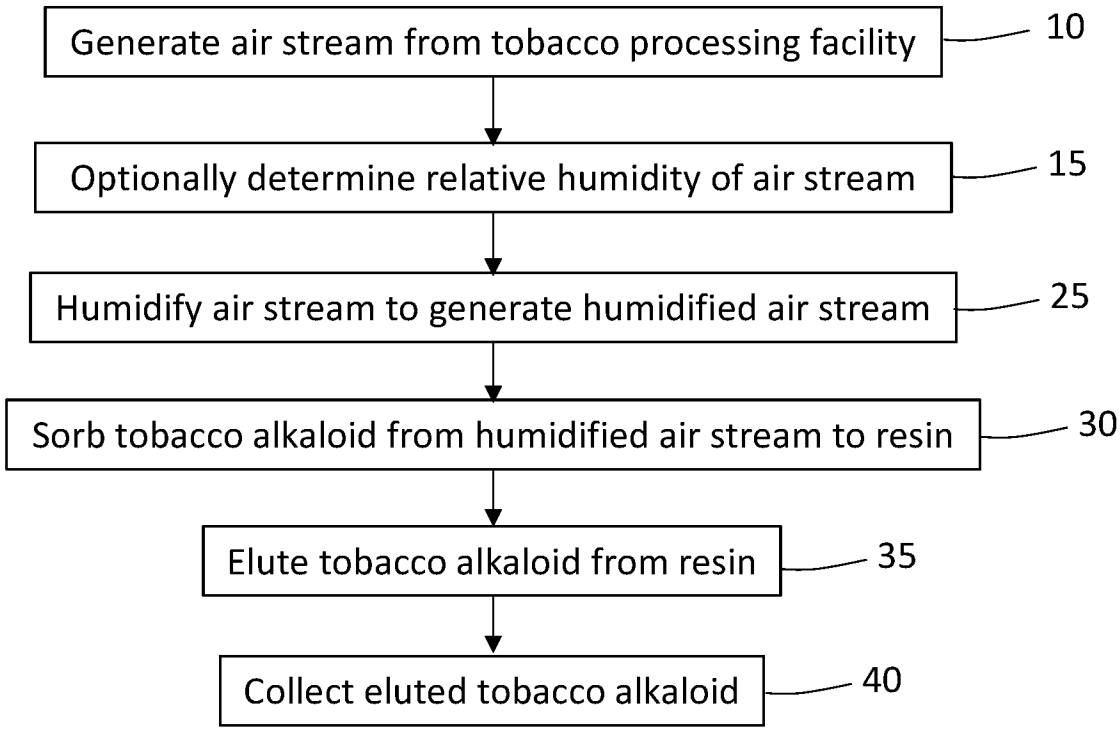
Generate air stream from tobacco processing facility
10
Optionally determine relative humidity of air stream
15
Humidify air stream to generate humidified air stream
25
Sorb tobacco alkaloid from humidified air stream to resin
30
Elute tobacco alkaloid from resin
35
Collect eluted tobacco alkaloid
40

FIG. 1

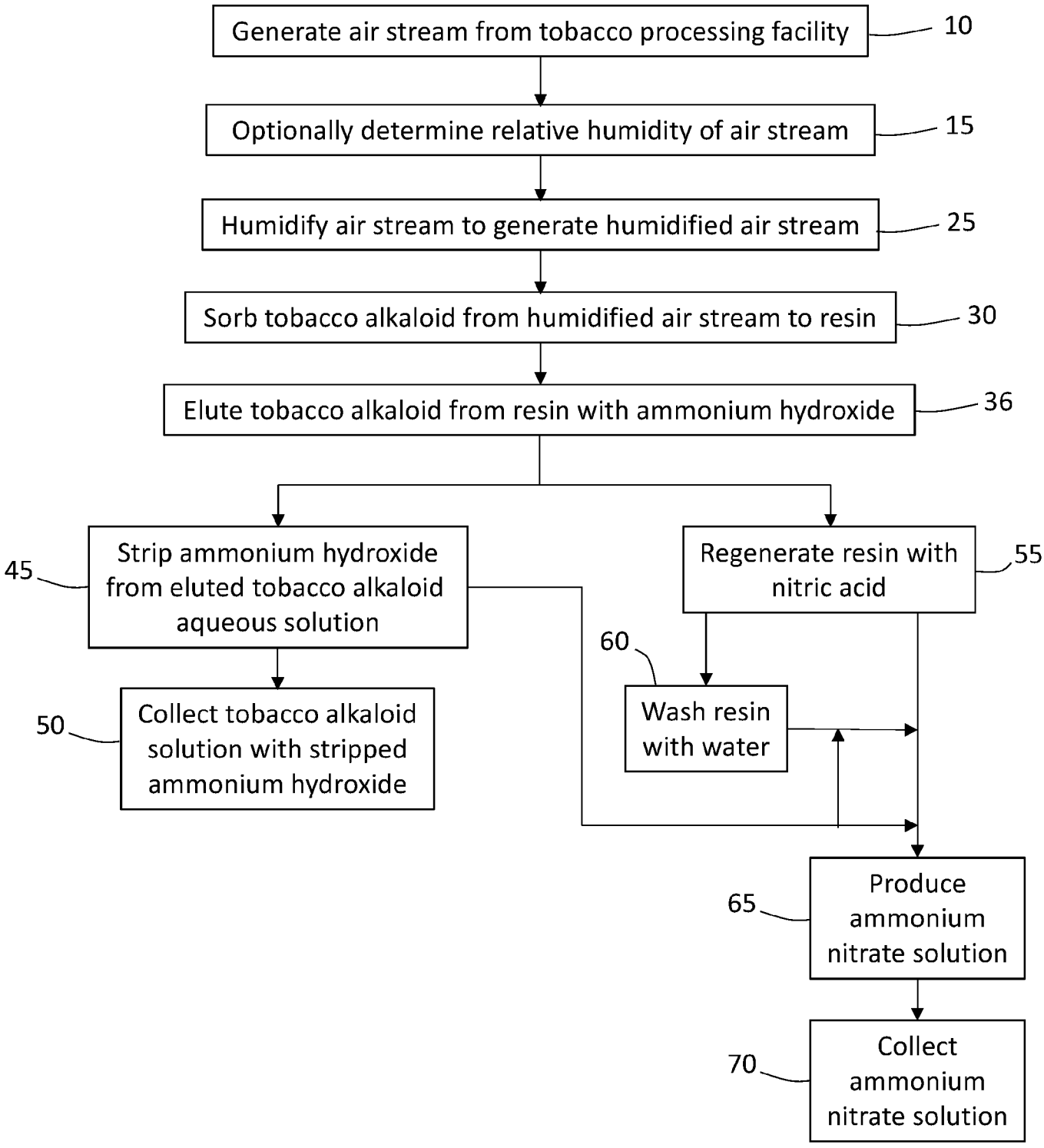
Generate air stream from tobacco processing facility
10
Optionally determine relative humidity of air stream
15
Humidify air stream to generate humidified air stream
25
Sorb tobacco alkaloid from humidified air stream to resin
30
Elute tobacco alkaloid from resin with ammonium hydroxide
36
45
Strip ammonium hydroxide from eluted tobacco alkaloid aqueous solution
50
Collect tobacco alkaloid solution with stripped ammonium hydroxide
Regenerate resin with nitric acid
55
60
Wash resin with water
65
Produce ammonium nitrate solution
70
Collect ammonium nitrate solution

FIG. 2

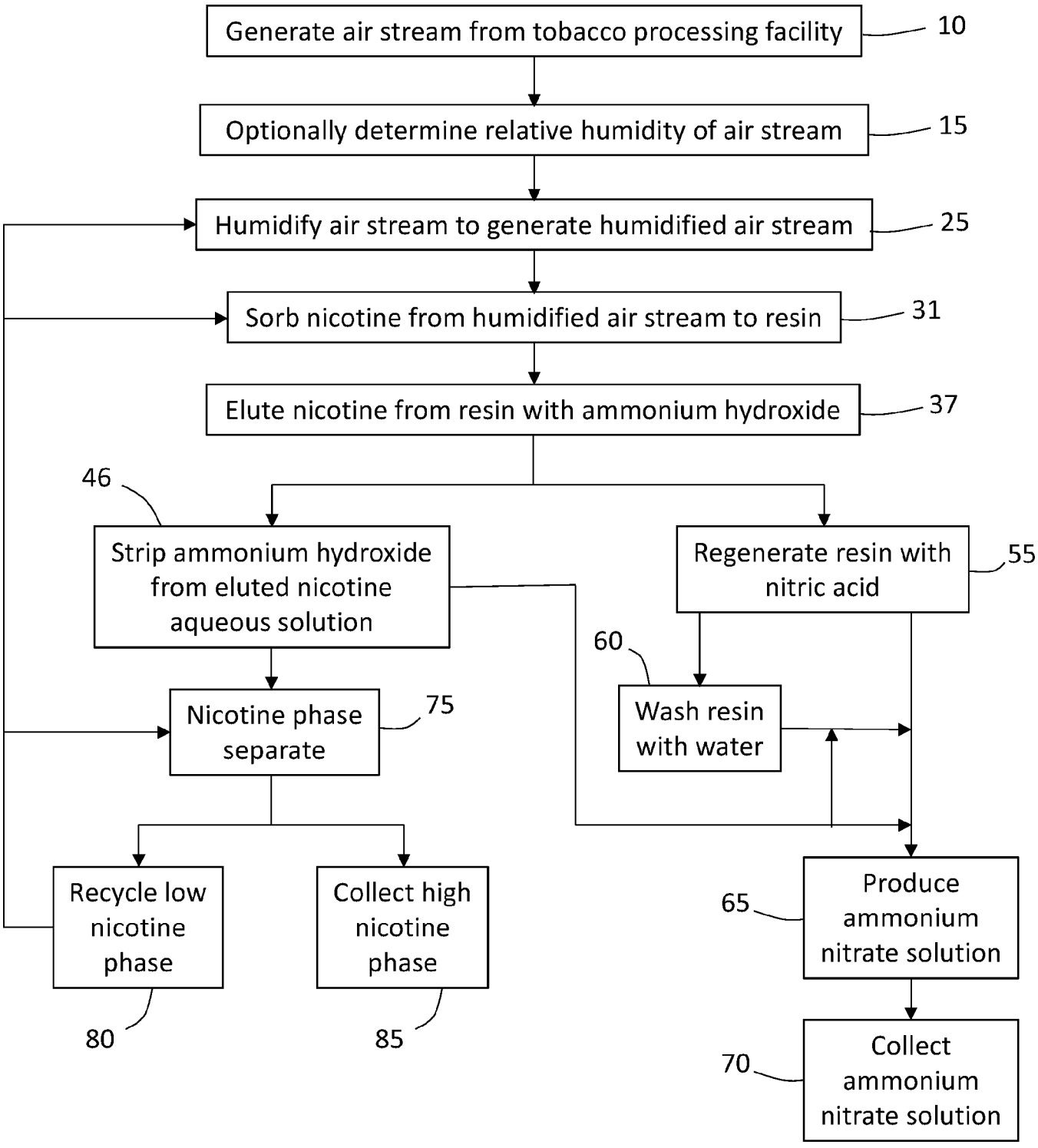
Generate air stream from tobacco processing facility
10
Optionally determine relative humidity of air stream
15
Humidify air stream to generate humidified air stream
25
Sorb nicotine from humidified air stream to resin
31
Elute nicotine from resin with ammonium hydroxide
37
46
Strip ammonium hydroxide from eluted nicotine aqueous solution
Regenerate resin with nitric acid
55
60
Wash resin with water
Nicotine phase separate
75
Recycle low nicotine phase
Collect high nicotine phase
Produce ammonium nitrate solution
65
Collect ammonium nitrate solution
70
80
85

FIG. 3

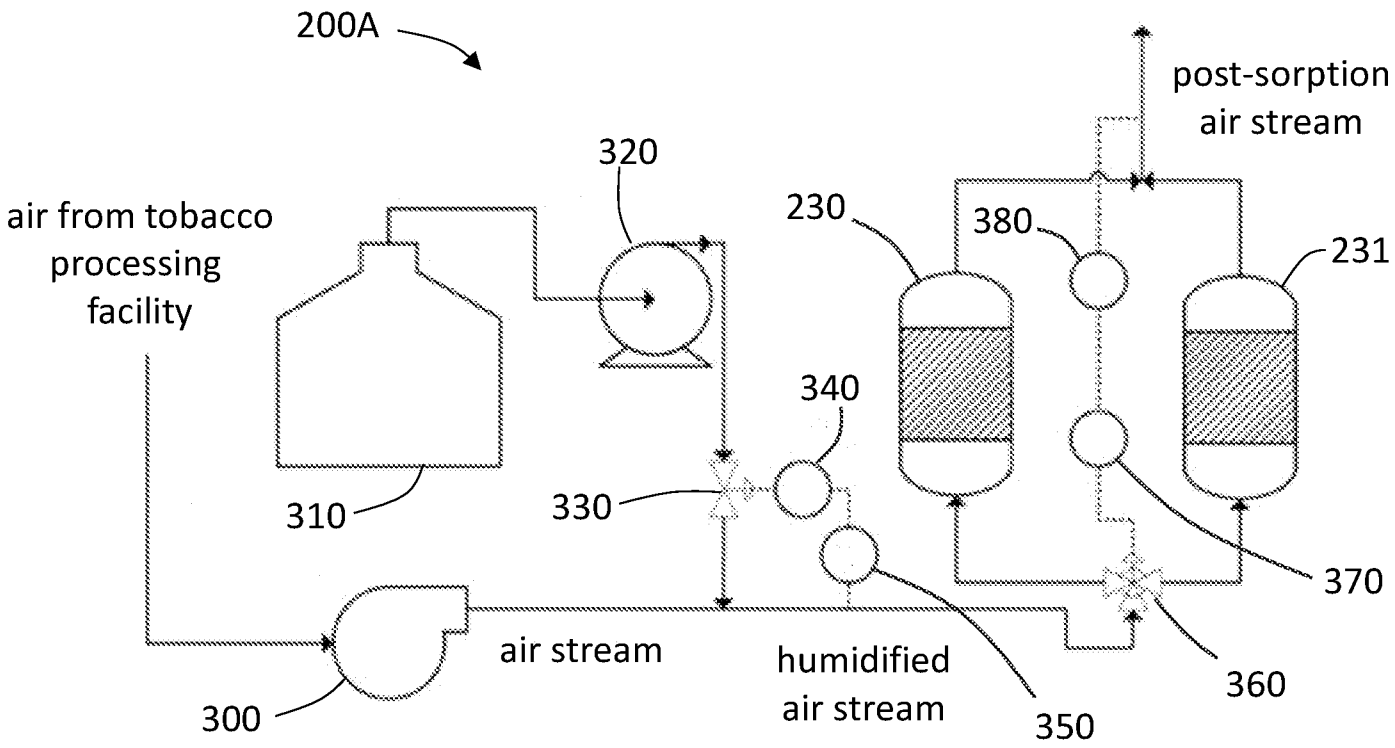
200A
post-sorption
air stream
320
air from tobacco
processing
facility
230
380
231
340
330
310
370
air stream
humidified
air stream
360
300
350

FIG. 4

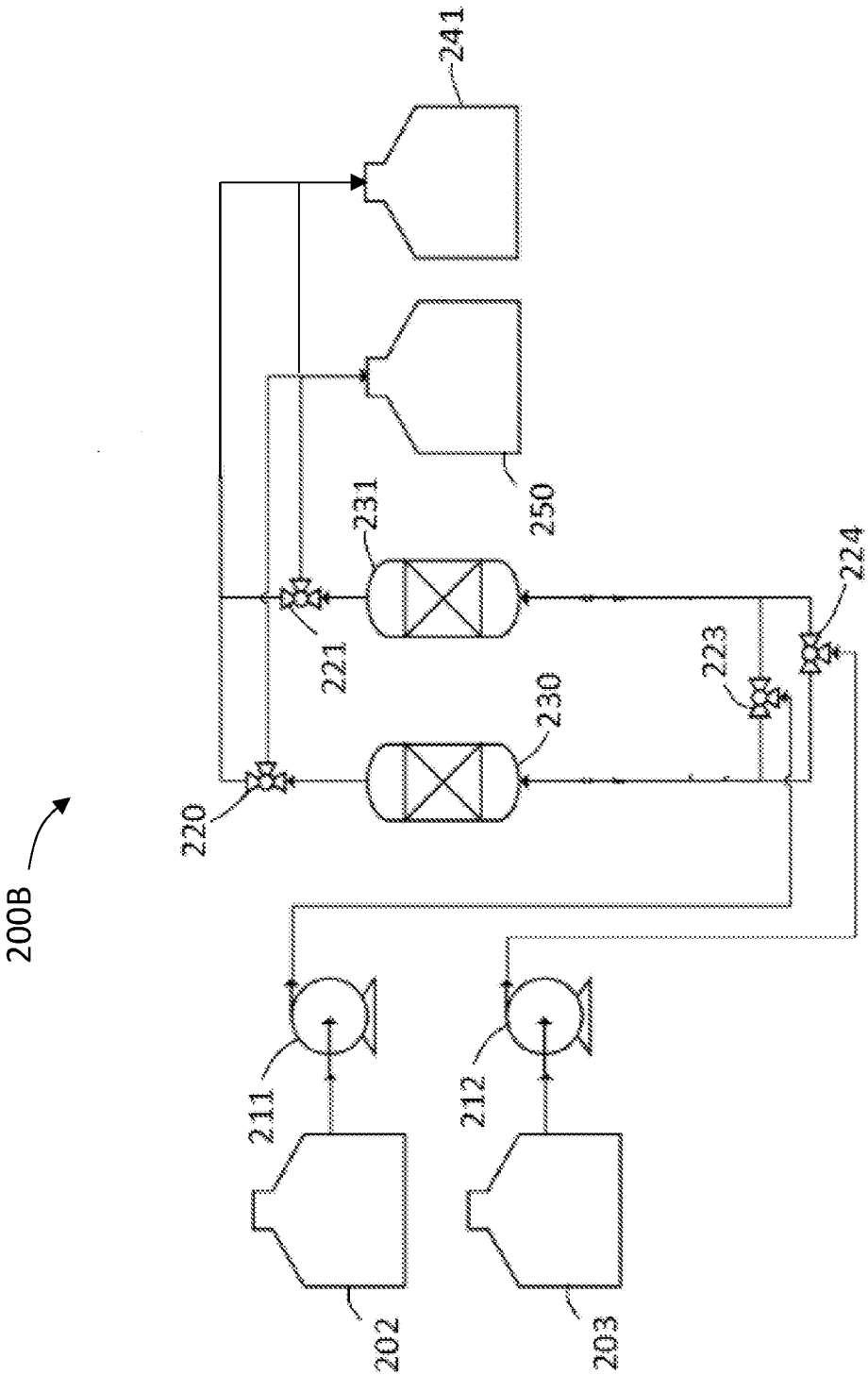

FIG. 5

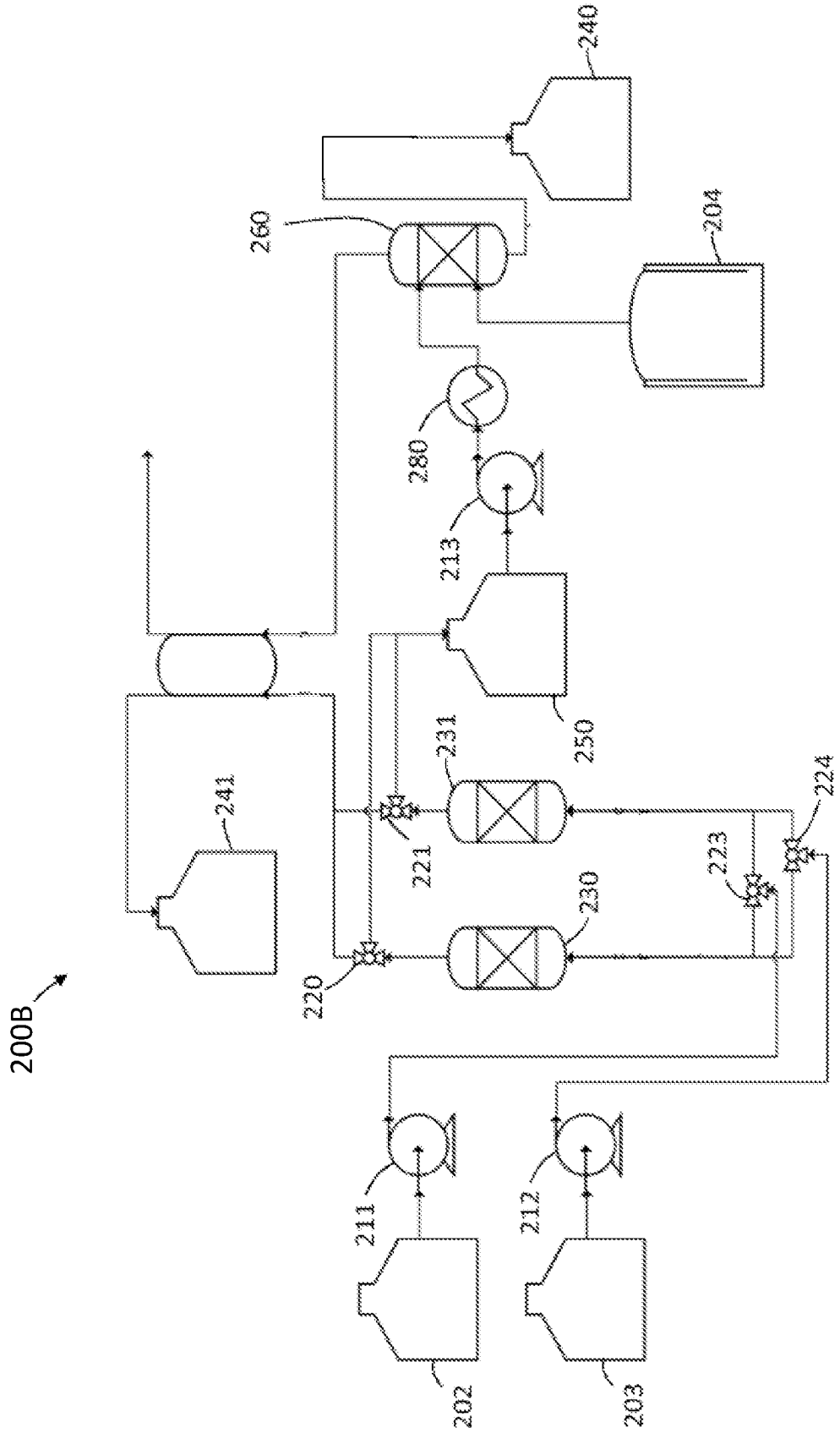
200B
202
203
204
211
212
213
220
221
223
224
230
231
240
241
250
260
280

FIG. 6

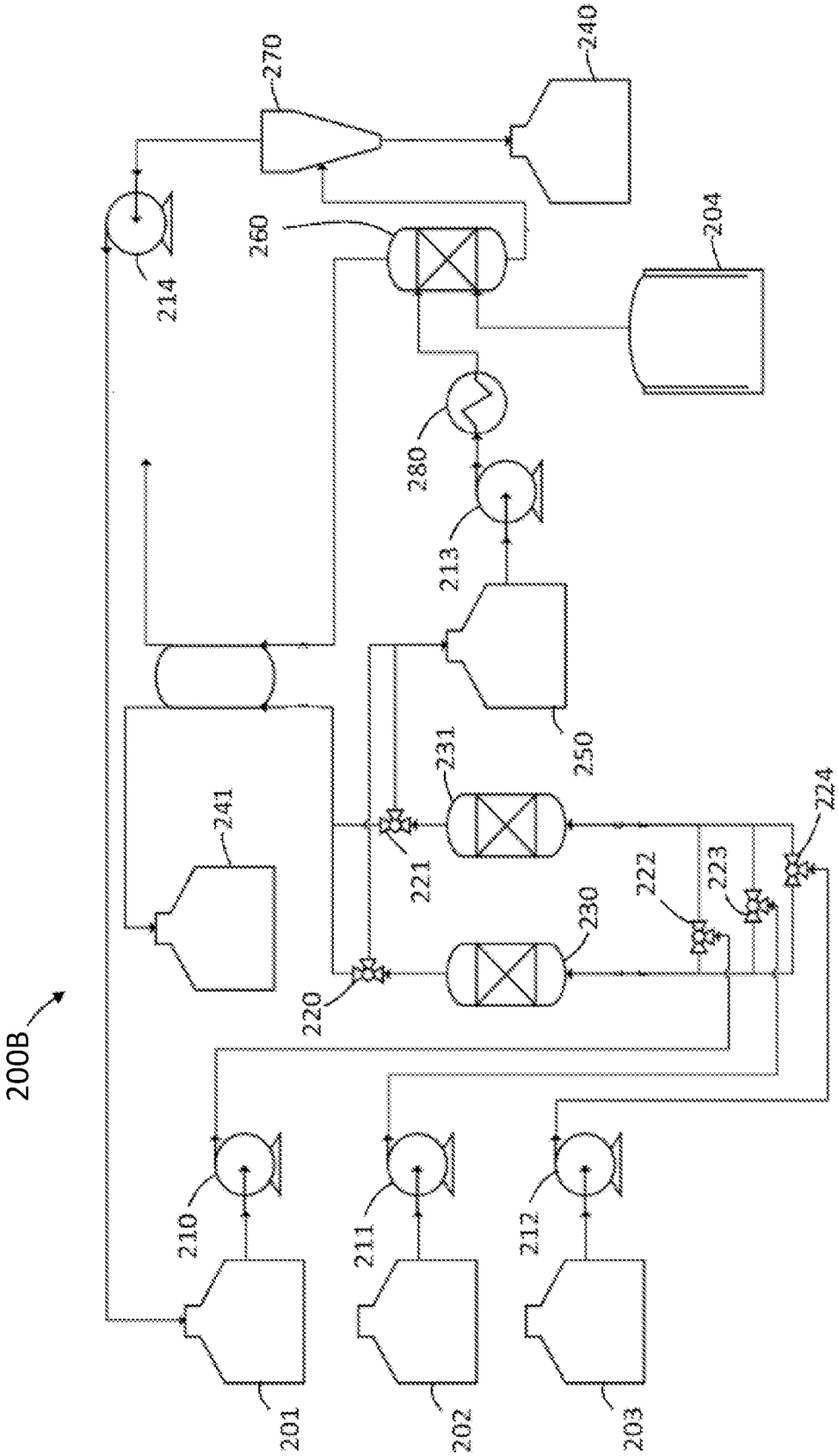
200B
201
202
203
210
211
212
214
220
221
222
223
224
230
231
240
241
250
260
270
280
204
213

FIG. 7

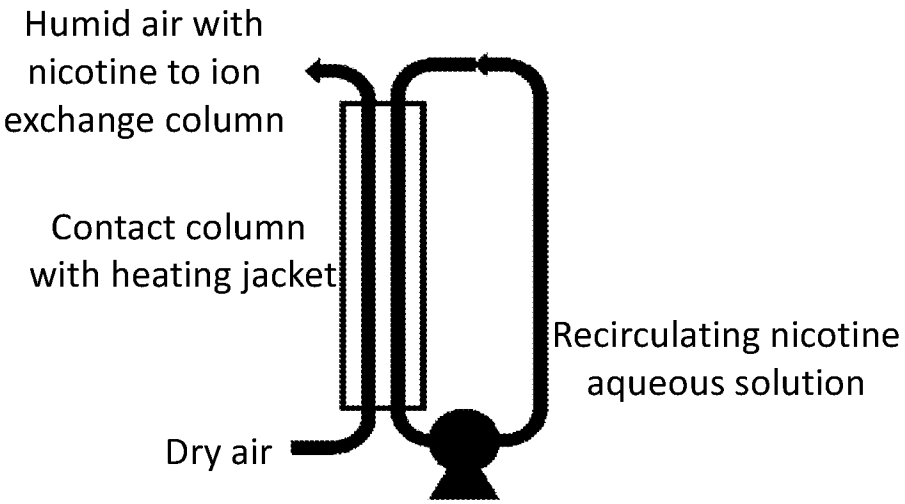
Humid air with nicotine to ion exchange column
Contact column with heating jacket
Recirculating nicotine aqueous solution
Dry air

FIG. 8

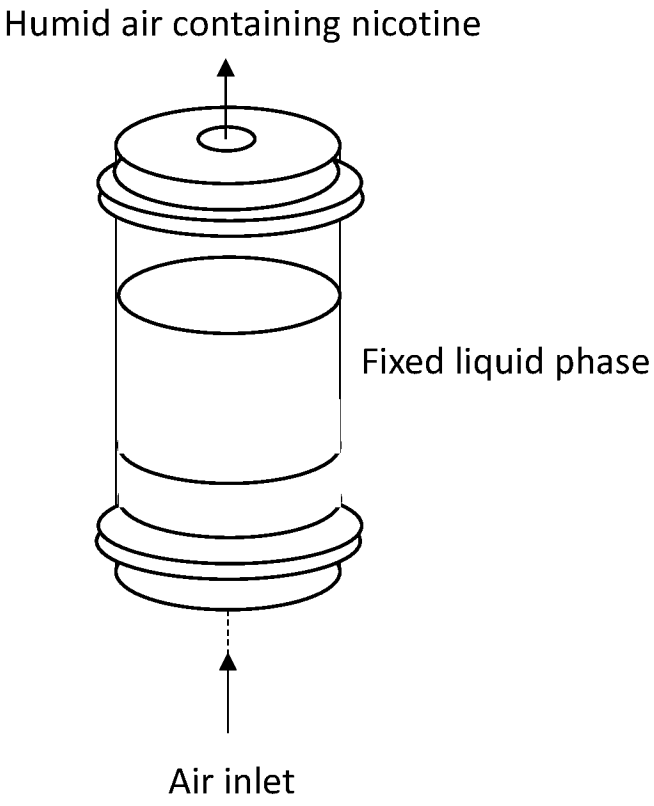
Humid air containing nicotine
Fixed liquid phase
Air inlet

FIG. 9

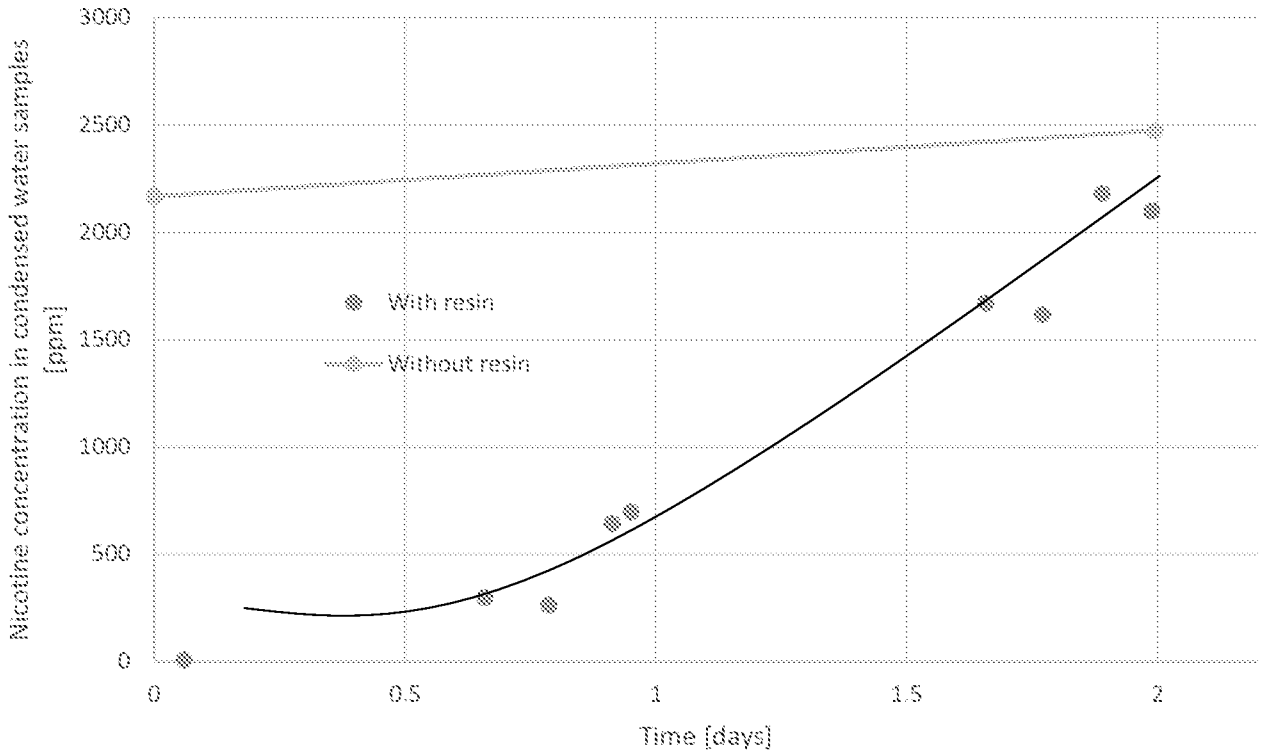
Nicotine concentration in condensed water samples [ppm]
3000
2500
2000
1500
1000
500
0
With resin
Without resin
0
0.5
1
1.5
2
Time [days]

FIG. 10

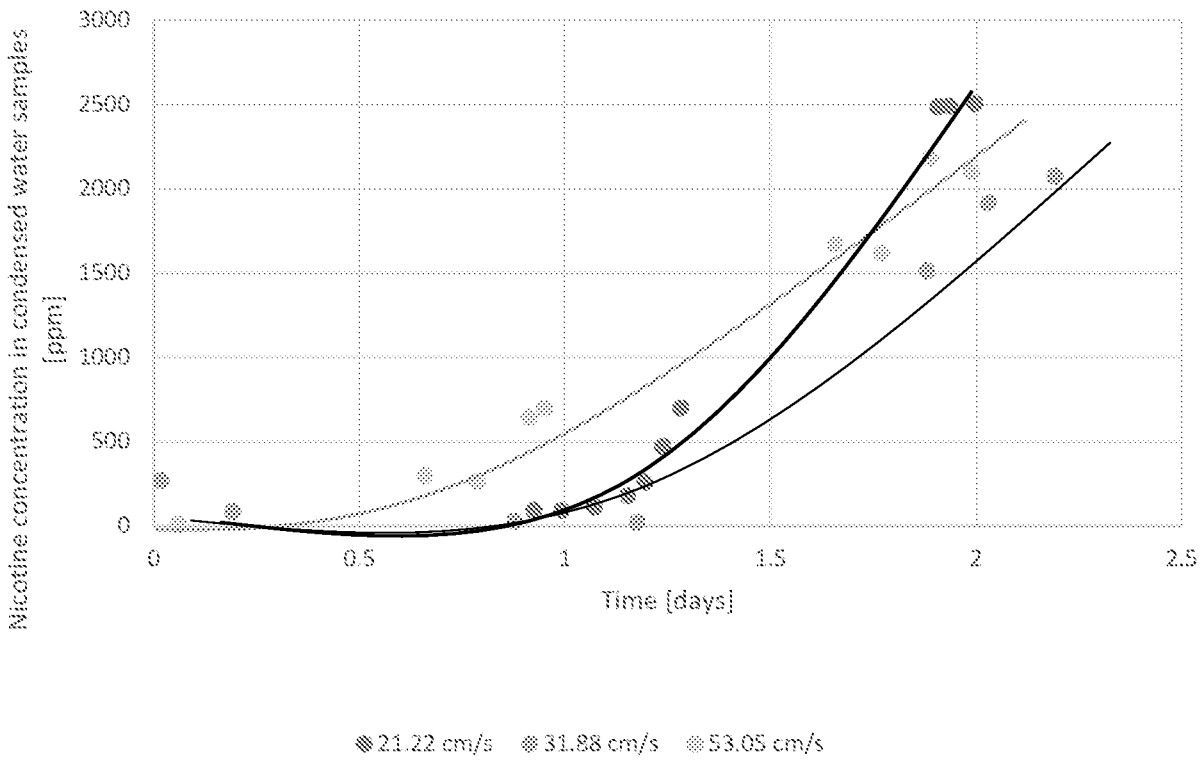
Nicotine concentration in condensed water samples [ppm]
3000
2500
2000
1500
1000
500
0
0
0.5
1
1.5
2
2.5
Time [days]
21.22 cm/s
31.88 cm/s
53.05 cm/s

FIG. 11

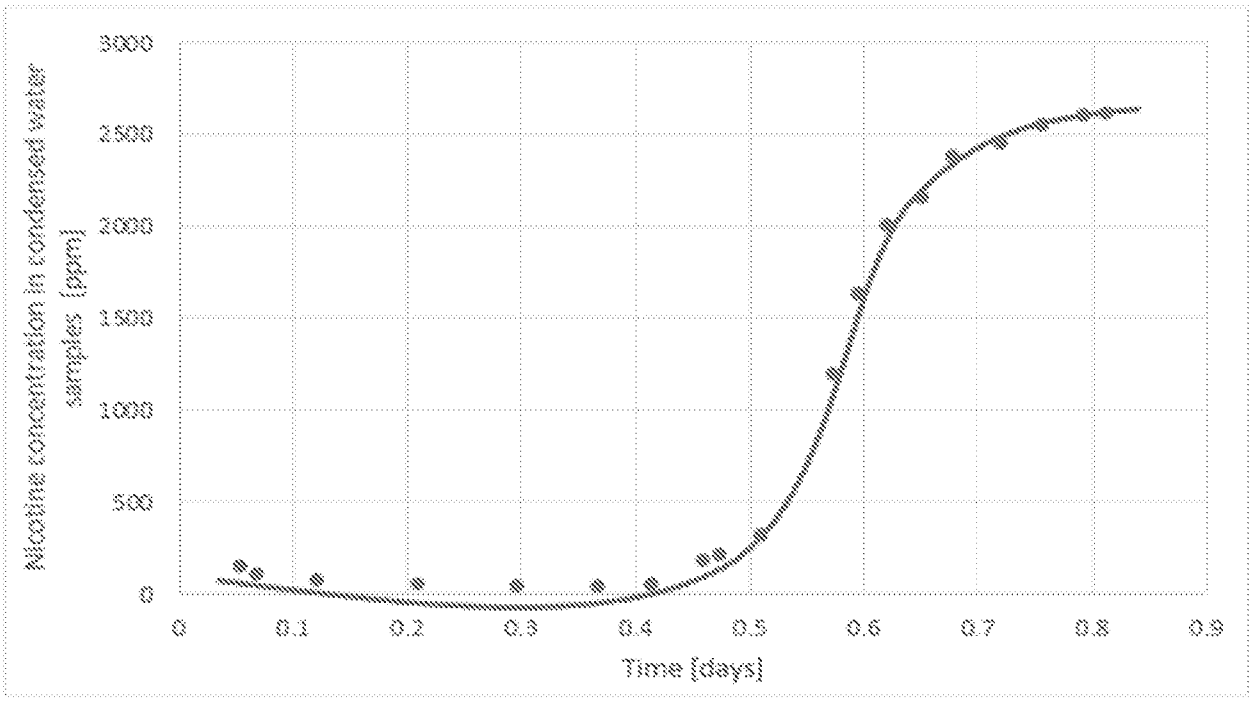
Nicotine concentration in condensed water samples [ppm]
3000
2500
2000
1500
1000
500
0
0
0.1
0.2
0.3
0.4
0.5
0.6
0.7
0.8
0.9
Time [days]

FIG. 12

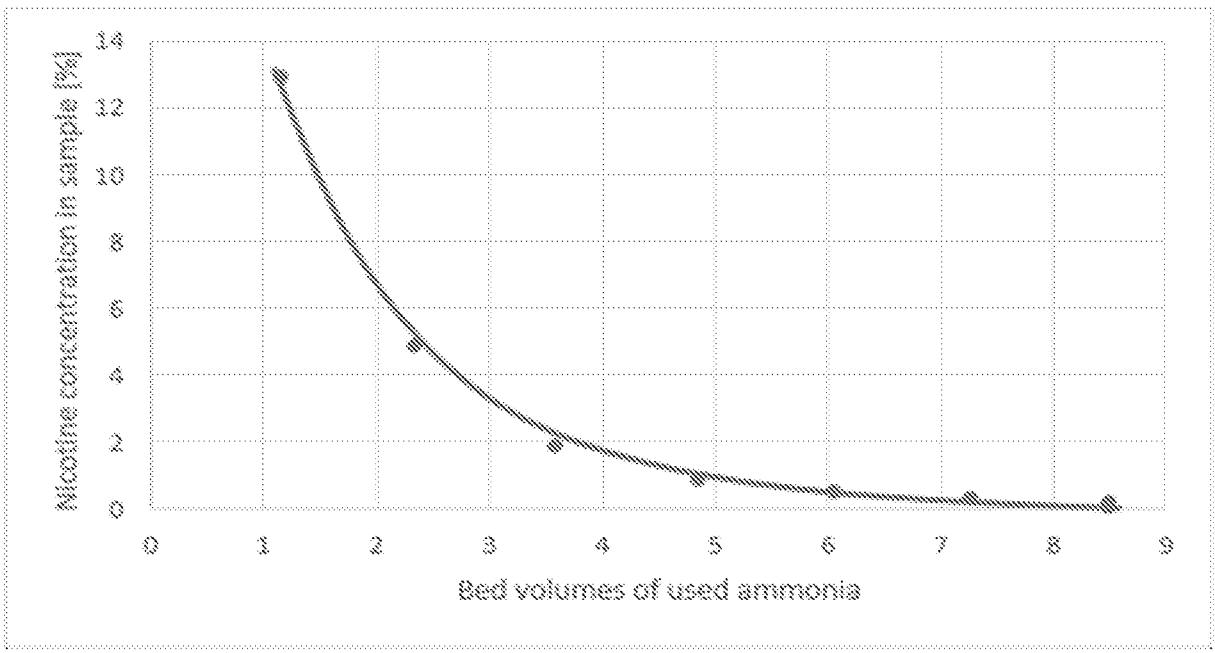
Nicotine concentration in sample [%]
14
12
10
8
6
4
2
0
0
1
2
3
4
5
6
7
8
9
Bed volumes of used ammonia

FIG. 13

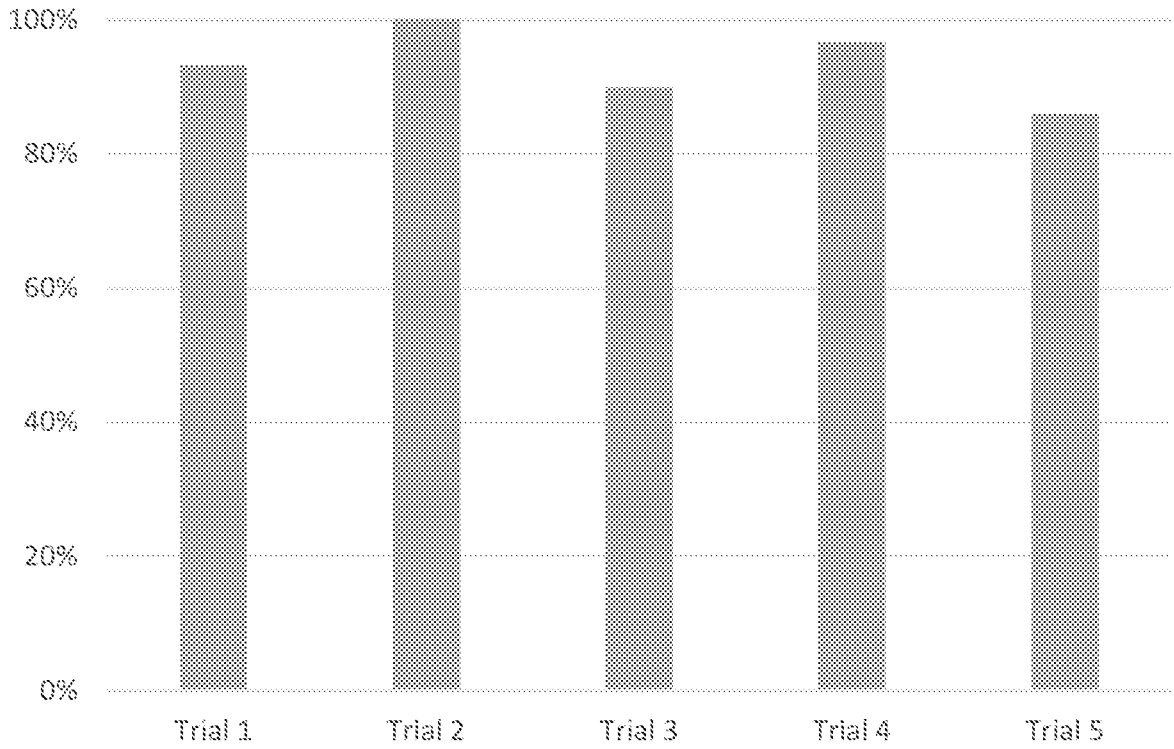

FIG. 14

INTERNATIONAL SEARCH REPORT

International application No
PCT/IB2024/057187

A. CLASSIFICATION OF SUBJECT MATTER

INV. A24B3/00 A24B3/10 A24B3/12 A24B3/14 B01D53/02
B01D53/04 B01D51/10
ADD.

According to International Patent Classification (IPC) or to both national classification and IPC

B. FIELDS SEARCHED

Minimum documentation searched (classification system followed by classification symbols)

A24B B01D A24F

Documentation searched other than minimum documentation to the extent that such documents are included in the fields searched

Electronic data base consulted during the international search (name of data base and, where practicable, search terms used)

EPO-Internal, WPI Data

C. DOCUMENTS CONSIDERED TO BE RELEVANT

Category*	Citation of document, with indication, where appropriate, of the relevant passages	Relevant to claim No.
X	CN 210 699 410 U (GUANGDONG XINTAIMO CLEAN TECH HOLDING CO LTD) 9 June 2020 (2020-06-09) paragraphs [0033], [0034], [0036]; claim 1; figures 1,3,4,5	14,15
A	CN 105 498 386 A (HAWDA INC) 20 April 2016 (2016-04-20) abstract; claims 1,2,7; figure 1	1-15
A	CN 103 846 006 A (FUJIAN WUYI TOBACCO CO LTD) 11 June 2014 (2014-06-11) the whole document	1-15

-/--

[x] Further documents are listed in the continuation of Box C.

[x] See patent family annex.

* Special categories of cited documents :

"A" document defining the general state of the art which is not considered to be of particular relevance

"E" earlier application or patent but published on or after the international filing date

"L" document which may throw doubts on priority claim(s) or which is cited to establish the publication date of another citation or other special reason (as specified)

"O" document referring to an oral disclosure, use, exhibition or other means

"P" document published prior to the international filing date but later than the priority date claimed

"T" later document published after the international filing date or priority date and not in conflict with the application but cited to understand the principle or theory underlying the invention

"X" document of particular relevance;; the claimed invention cannot be considered novel or cannot be considered to involve an inventive step when the document is taken alone

"Y" document of particular relevance;; the claimed invention cannot be considered to involve an inventive step when the document is combined with one or more other such documents, such combination being obvious to a person skilled in the art

"&" document member of the same patent family

Date of the actual completion of the international search	Date of mailing of the international search report
17 December 2024	03/01/2025

Name and mailing address of the ISA/	Authorized officer
European Patent Office, P.B. 5818 Patentlaan 2 NL - 2280 HV Rijswijk Tel. (+31-70) 340-2040, Fax: (+31-70) 340-3016	Gzil, Piotr

2

Form PCT/ISA/210 (second sheet) (April 2005)

INTERNATIONAL SEARCH REPORT

International application No
PCT/IB2024/057187

C(Continuation). DOCUMENTS CONSIDERED TO BE RELEVANT

Category*	Citation of document, with indication, where appropriate, of the relevant passages	Relevant to claim No.
A	FAISAL I KHAN ET AL: "Removal of Volatile Organic Compounds from polluted air", JOURNAL OF LOSS PREVENTION IN THE PROCESS INDUSTRIES, vol. 13, no. 6, 1 November 2000 (2000-11-01), pages 527-545, XP055750464, United Kingdom ISSN: 0950-4230, DOI: 10.1016/S0950-4230(00)00007-3 the whole document -----	1-15
A	CN 111 715 003 A (SHANGHAI CONSTRUCTION NO 4 GROUP CO LTD) 29 September 2020 (2020-09-29) the whole document -----	1-15

2

INTERNATIONAL SEARCH REPORT

Information on patent family members

International application No
PCT/IB2024/057187

Patent document cited in search report	Publication date	Patent family member(s)	Publication date
CN 210699410 U	09-06-2020	NONE	
CN 105498386 A	20-04-2016	CN 103785269 A	14-05-2014
		CN 105498386 A	20-04-2016
CN 103846006 A	11-06-2014	NONE	
CN 111715003 A	29-09-2020	NONE	