Nov. 30, 1926. 1,609,065

H. R. CORWIN

SIPHON BREAKER FOR OIL FEEDING DEVICES

Filed Oct. 21, 1925 2 Sheets-Sheet 1

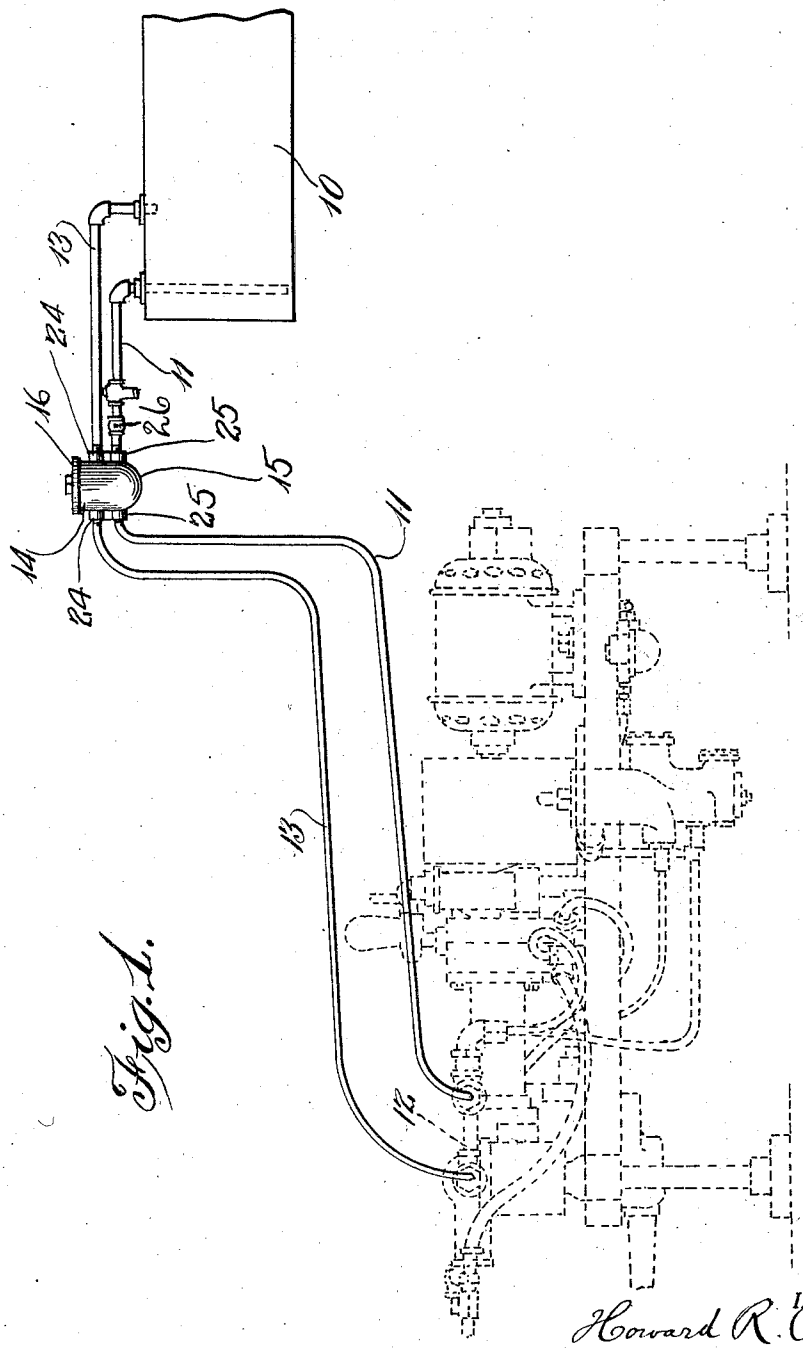

Fig. 1.

INVENTOR.
Howard R. Corwin
BY Albert Popkins
ATTORNEYS.

Nov. 30, 1926. 1,609,065

H. R. CORWIN

SIPHON BREAKER FOR OIL FEEDING DEVICES

Filed Oct. 21, 1925 2 Sheets-Sheet 2

Fig. 2.

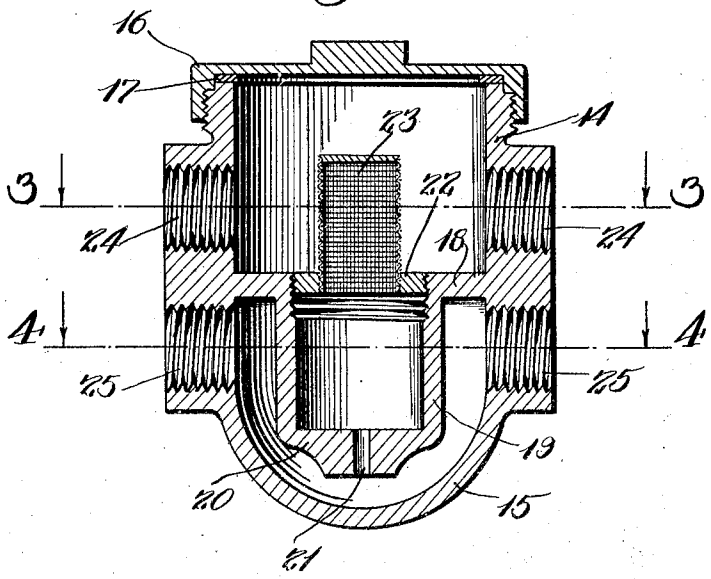

Fig. 3.

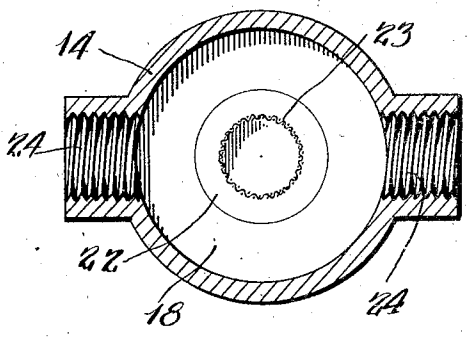

Fig. 4.

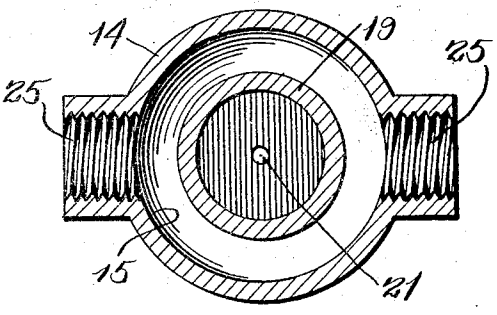

INVENTOR.
Howard R. Corwin
BY Albert Popkins
ATTORNEYS.

Patented Nov. 30, 1926. 1,609,065

UNITED STATES PATENT OFFICE.

HOWARD R. CORWIN, OF NEWARK, NEW JERSEY.

SIPHON BREAKER FOR OIL-FEEDING DEVICES.

Application filed October 21, 1925. Serial No. 63,968.

This invention relates to a siphon breaker for oil feeding devices.

It frequently happens in devices of this character, as for instance the devices used in supplying fuel oil to household furnace boilers, that the details are so controlled by constructural conditions that it is imperative to locate the main supply, such as a storage tank, above the burner. Such a condition will be readily understood to exist in a case where a furnace burner is located in a cellar while the supply tank is located outside of the cellar at a higher level than the burner.

With such conditions prevailing, and understanding that a pipe must lead from the supply tank to the burner, it is readily comprehended that under normal and generally used conditions, a siphonic action exists between the tank and the lower level of the burner feed pipe. Ordinarily there is provided in the fuel supply line a pump which serves to force fuel to the burner and such a pump is commonly provided with a return so that surplus fuel, not required by the burner, may be returned to the tank. Such a construction is used in most types of oil burners. The construction as above described is, however, open to a very serious objection. If either the supply pipe leading from the tank to the pump or the return pipe leading from the pump to the tank happens to have its continuity interrupted, as by a break or a separation at a joint, siphonic action will take place from the tank and practically the entire contents of the tank will be discharged, and will in the case mentioned, flow into the cellar.

The principal object of the present invention is to provide a special device which, being of improved construction, will automatically eliminate this siphonic action before it has proceeded so far as to produce wasteful or injurious results.

With the above and other objects in view as will be hereinafter apparent, the invention consists in general of certain novel details of construction and combinations of parts hereinafter fully described, illustrated in the accompanying drawings and specifically claimed.

In the accompanying drawings like characters of reference indicate like parts in the several views, and:

Figure 1 is a diagram showing the relation of the vacuum breaker to a tank, and supply pump.

Figure 2 is a vertical median section through the vacuum breaker detached from the remainder of the apparatus.

Figure 3 is a section on the line 3—3 of Figure 2.

Figure 4 is a section on the line 4—4 of Figure 2.

The invention comprises two features: first, the interposition in a feed line of a vacuum breaker and; second, the provision of a special form of vacuum breaker.

In the present embodiment there is shown a supply or storage tank 10 from whence a pipe 11 leads to a pump 12. From the pump 12 a return pipe 13 leads back to the tank 10. The drawings forming part of this disclosure show the supply or storage tank 10 located above the pump so that, once the pipe 11 is filled, a constant siphonic action exists and, should this pipe be broken or become disjointed anywhere below the tank, the tank will be drained of its contents by such siphonic action. Similarly, if the return pipe 13 be broken or become disjointed the tank will be emptied rapidly due to the action of the pump.

In order to overcome either action the present invention is provided. This invention consists in inserting between the tank and the fuel using device, in this case the pump, means for stopping the action of the pumps on the fuel in the tank and for checking siphonic action from such tank. To provide such means there is arranged a siphon breaker consisting of a hollow body or casing 14 having a substantially hemispherical lower end 15. The upper end of this body is normally closed by a cap 16, a gasket 17 being provided to ensure a tight fit between the cap and the body. Across the interior of this body about midway between the top and bottom ends thereof extends a diaphragm 18 having a central opening and from this diaphragm depends, around the opening, a well 19 having a bottom 20 provided with a small centrally disposed opening 21. The upper end of this well is threaded interiorly and in this upper threaded end is screwed a disk or ring 22 having a central opening above which projects a

strainer 23. Above the diaphragm or partition 18 the body is provided with inlet and outlet openings 24 and similarly inlet and outlet openings 25 are provided below this partition. The upper inlet and outlet serve for connection in the return line from the pump while the lower inlet and outlet serve for connection in the suction line of the pump. The device thus set forth is preferably interposed in these lines at the highest or very near the highest point of such lines. In any event they must be positioned above the point at which siphonic action can take place from the tank.

For the purpose of understanding the action of the device it may be supposed that, the vacuum breaker being properly placed in the supply and return lines, a solution of continuity takes place in the return line. Then, the pump being in operation, liquid is drawn out of the tank and the surplus, not used in the burner or other outlet, is forced back through the return pipe and escape through the break in such pipe. Due to the presence of the vacuum breaker in the line the fluid level in such breaker will fall below the lower end of the opening 21 whereupon the fluid fuel will cease to flow and air only will be drawn through the pump. In this condition it will be plain that the tank cannot be emptied.

Again, suppose the suction or supply line to be broken. Then the pump ceases to act on the tank but immediately the level of fluid in the vacuum breaker drops as before and no siphonic action can take place.

In order to hold the oil in the breaker and suction line and to eliminate the necessity of priming and the expulsion of air from the line there is provided in the line 11 a ball check 26.

There has thus been provided a simple and efficient device of the kind described and for the purpose specified.

It is obvious that minor changes may be made in the form and construction of the invention without departing from the material spirit thereof. It is not, therefore, desired to confine the invention to the exact form herein shown and described, but it is desired to include all such as properly come within the scope claimed.

Having thus described the invention, what is claimed as new, is:

1. A device of the kind described comprising a casing having a diaphragm separating the casing into upper and lower chambers, said diaphragm having a depressed well portion having a port in its bottom, the casing being provided with an inlet and an outlet for each chamber.

2. A device of the kind described comprising a casing having a diaphragm separating the casing into upper and lower chambers, said diaphragm having a depressed well portion having a port in its bottom, the casing being provided with an inlet and an outlet for each chamber, and a strainer carried by said diaphragm above said well.

3. A device of the kind described comprising a casing having a diaphragm separating the casing into upper and lower chambers, said diaphragm having a depressed well portion having a port in its bottom, the casing being provided with an inlet and an outlet for each chamber, a reservoir, a pipe extending from said reservoir to the lower chamber and communicating with the bottom of said reservoir, a second pipe leading from the top of the reservoir to the upper chamber and communicating with the inlet thereof, and a check valve in the first pipe and opening away from said reservoir.

4. A device of the kind described comprising a casing having a diaphragm separating the casing into upper and lower chambers, said diaphragm having a depressed well portion having a port in its bottom, the casing being provided with an inlet and an outlet for each chamber, and a strainer carried by said diaphragm above said well, a reservoir, a pipe extending from said reservoir to the lower chamber and communicating with the bottom of said reservoir, a second pipe leading from the top of the reservoir to the upper chamber and communicating with the inlet thereof, and a check valve in the first pipe and opening away from said reservoir.

In testimony whereof I affix my signature.

HOWARD R. CORWIN.