W. O. CANOUTS.

EMBALMING AND OPERATING TABLE.

APPLICATION FILED APR. 12, 1916.

1,232,491.

Patented July 10, 1917.

4 SHEETS—SHEET 1.

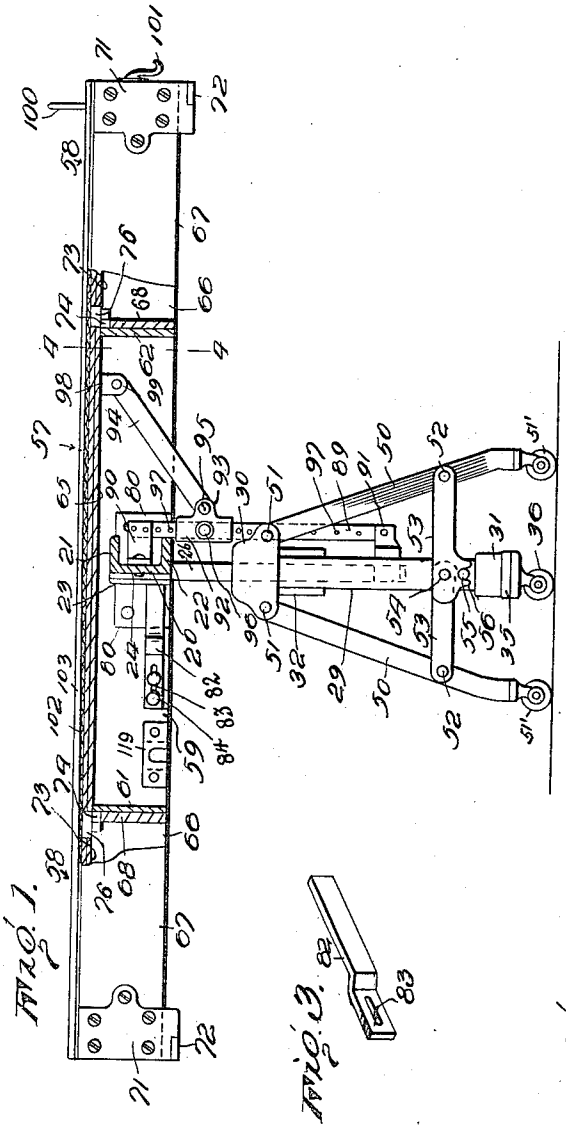

Fig. 1.

Fig. 3.

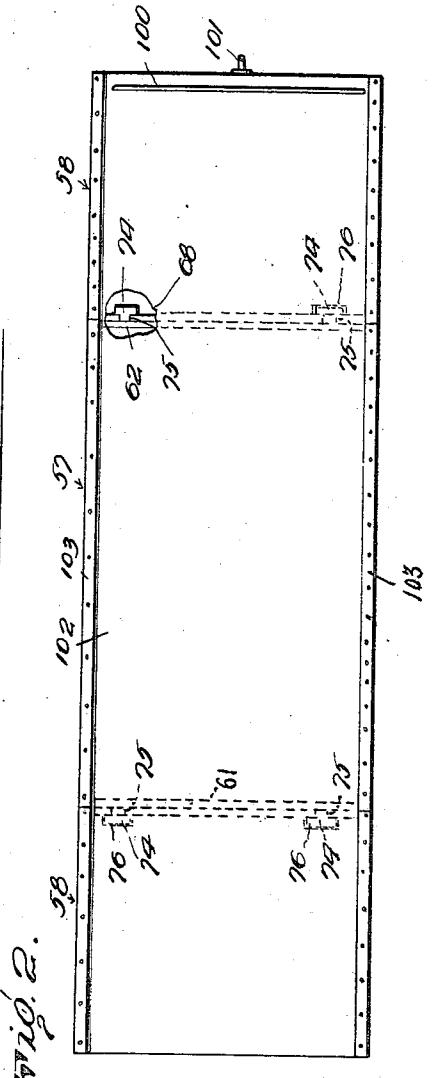

Fig. 2.

Inventor

W. O. Canouts

By

Attorneys.

W. O. CANOUTS.

EMBALMING AND OPERATING TABLE.

APPLICATION FILED APR. 12, 1916.

1,232,491.

Patented July 10, 1917.

4 SHEETS—SHEET 2.

FIG. 4.

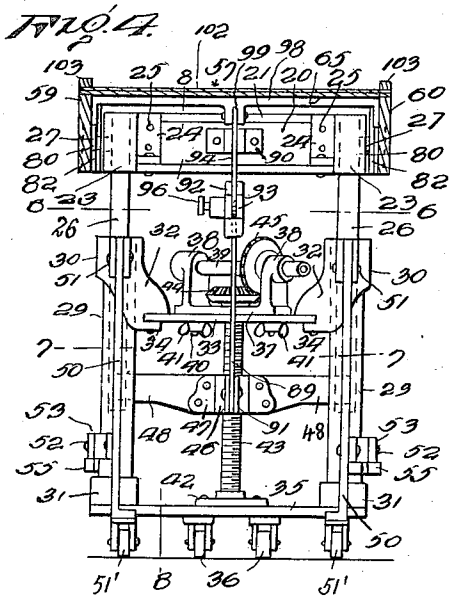

FIG. 8.

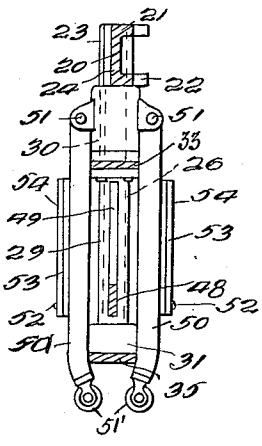

FIG. 5.

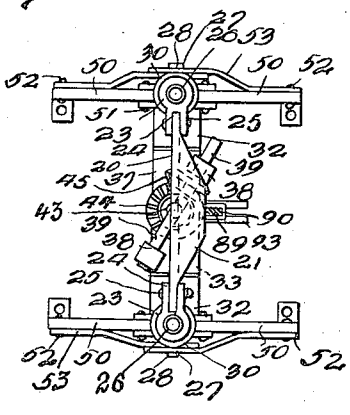

FIG. 6.

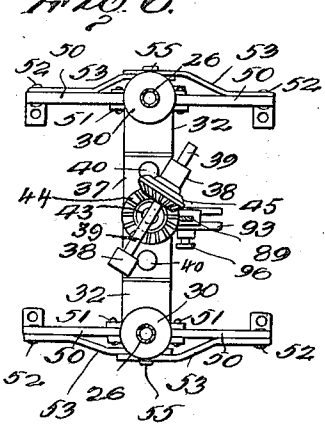

FIG. 7.

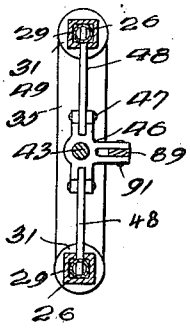

Inventor

W. O. Canouts

By

Attorneys

W. O. CANOUTS.

EMBALMING AND OPERATING TABLE.

APPLICATION FILED APR. 12, 1916.

1,232,491.

Patented July 10, 1917.

4 SHEETS—SHEET 3.

Fig. 9.

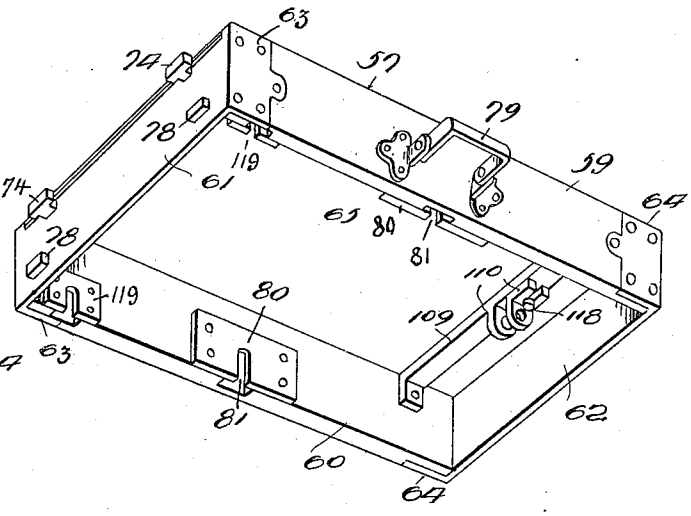

Fig. 12.

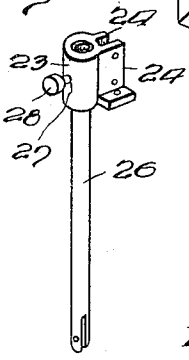

Fig. 10.

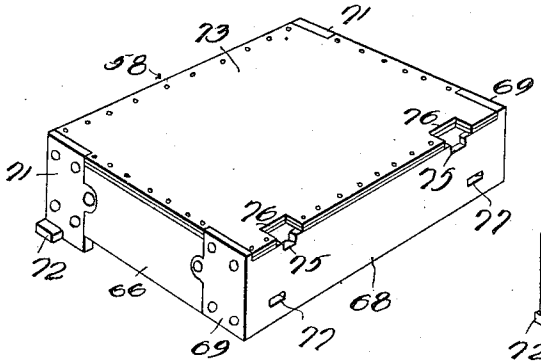

Fig. 11.

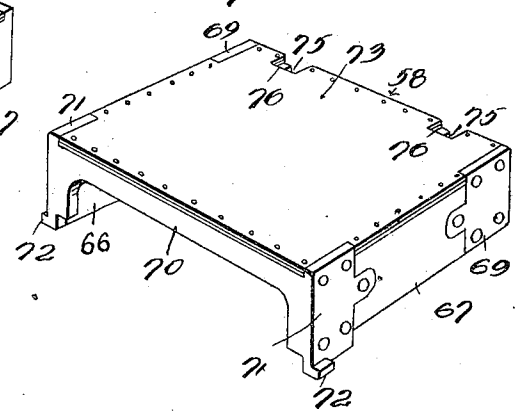

Fig. 13.

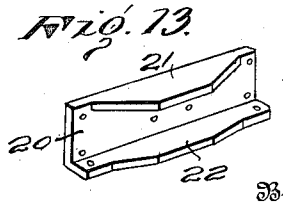

Inventor

W. O. Canouts

By

[illegible] Attorneys.

W. O. CANOUTS.

EMBALMING AND OPERATING TABLE.

APPLICATION FILED APR. 12, 1916.

1,232,491.

Patented July 10, 1917.

4 SHEETS—SHEET 4.

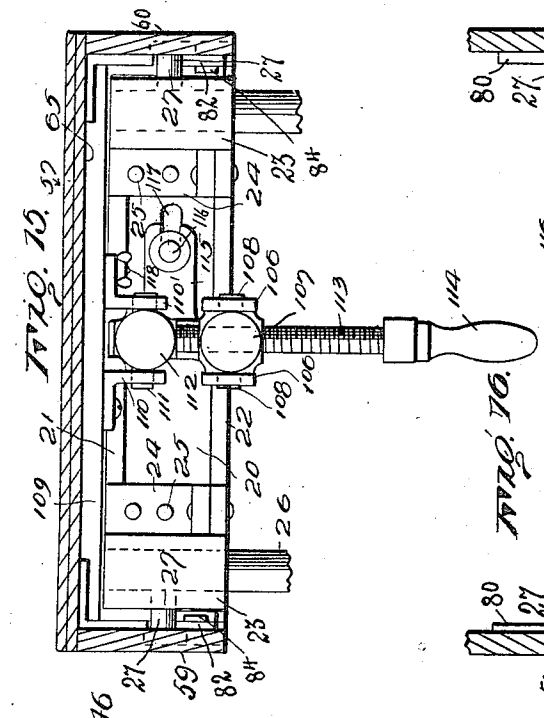

Fig. 7b.

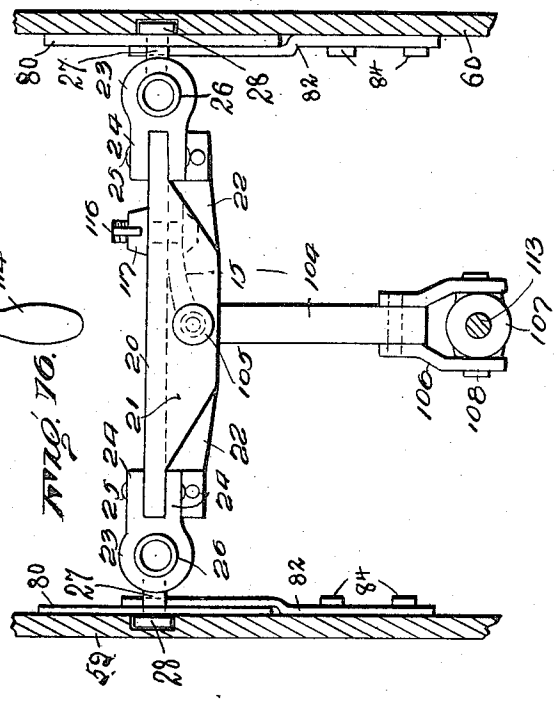

Fig. 7a.

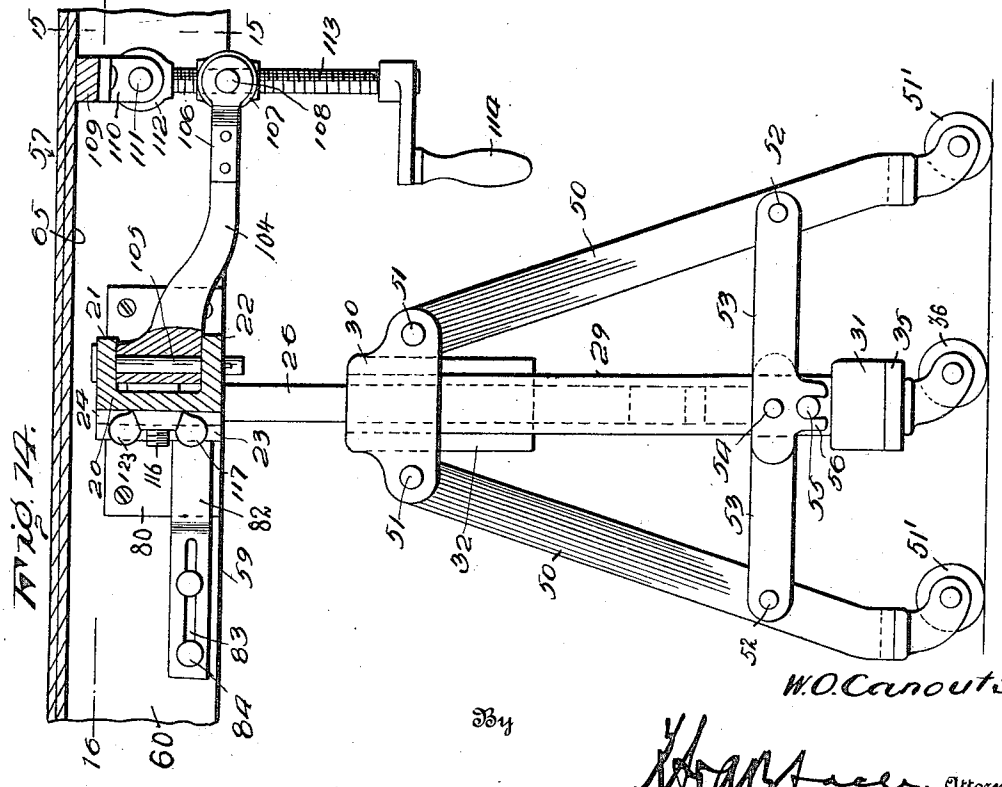

Fig. 7d.

W. O. Canouts

By

Attorneys.

UNITED STATES PATENT OFFICE.

WILLIS O. CANOUTS, OF CARSON CITY, MICHIGAN.

EMBALMING AND OPERATING TABLE.

1,232,491. Specification of Letters Patent. Patented July 10, 1917.

Application filed April 12, 1916. Serial No. 90,733.

To all whom it may concern:

Be it known that I, WILLIS O. CANOUTS, a citizen of the United States, residing at Carson City, in the county of Montcalm and State of Michigan, have invented certain new and useful Improvements in Embalming and Operating Tables, of which the following is a specification.

This invention relates to improvements in combined embalming and operating tables, and has for one of its objects to provide a device of this character which may be adjusted to any desired inclination and likewise so arranged that the parts may be separated for packing in a relatively small area for transportation or storage.

Another object of the invention is to provide a device of this character which may be adjusted vertically or arranged in inclined position to any required extent.

With these and other objects in view, the invention consists in certain novel features of construction, as hereinafter shown and described and then specifically pointed out in the claims; and in the drawings illustrative of the preferred embodiment of the invention—

Figure 1 is a side elevation partly in section of the improved device;

Fig. 2 is a plan view;

Fig. 3 is a detached perspective view of one of the slidable locking members;

Fig. 4 is an end elevation with the platform or table in section on the line 4—4 of Fig. 1;

Fig. 5 is a plan view of the adjustable and foldable support with the platform detached;

Fig. 6 is a plan view of the lower portion of the support with the vertical adjustable standards in section on the line 6—6 of Fig. 4;

Fig. 7 is a plan view of the lower portion of the support in section on the line 7—7 of Fig. 4;

Fig. 8 is a side elevation of the support in folded position with the parts in section on the line 8—8 of Fig. 4;

Fig. 9 is a detached perspective view from beneath of the main central portion of the table or platform;

Fig. 10 is a perspective view from above of one of the terminal sections of the table or platform viewed from the inner end;

Fig. 11 is a view similar to Fig. 12 viewed from the outer end;

Fig. 12 is a detached perspective view of one of the vertically adjustable standards;

Fig. 13 is a detached perspective view of the upper transverse member of the support;

Fig. 14 is an enlarged detail view similar to a portion of Fig. 1, illustrating a modification in the construction;

Fig. 15 is a side view of the upper part of Fig. 14 with the table or platform in section on the line 15—15 of Fig. 14;

Fig. 16 is a plan view of the parts shown in Fig. 14 with the table or platform in section on the line 16—16 of Fig. 14.

Corresponding and like parts are referred to in the following description and indicated in all the views of the drawings by the same reference characters.

The improved device comprises in general a foldable and adjustable support and a table or platform mounted to swing upon the support and with adjusting means carried by the support for adjusting the table or platform to any required angle and holding the same in that position.

The table or platform support comprises an upper holding member preferably formed of a section of channel iron and cut into the form shown in Fig. 13 and including a vertical web portion 20, an upper horizontal web portion 21 and a lower horizontal web portion 22. The web 21 is cut away at the ends leaving the vertical web portion 20 projecting for a considerable distance beyond the ends of the horizontal web portion 21. The lower web 22 is likewise reduced in width toward the ends, as shown in Fig. 13. Located at each end of the member just described are sleeves 23, each sleeve having webs 24 projecting therefrom and spaced apart to bear upon opposite sides of the terminals of the vertical web 20 and secured thereto by rivets or similar fastening devices 25. Rigidly supported in the sleeves 23 are standards 26, preferably tubular to decrease the weight, the standards being thus spaced apart, as shown. The sleeves 23 may be secured to the standards 26 in any suitable manner, but preferably by holding pins or bolts 27 engaging threaded openings in the sleeves and bearing against the standards, as illustrated in

Figs. 10, 15 and 16. Each of the bolts 27 is provided with a laterally directed head 28 spaced for a considerable distance from the adjacent sleeve to engage the table or platform, as hereafter described.

The table or platform support likewise includes vertical tubular guide members 29, preferably square, as shown, and in which the standards 26 are slidably disposed. At their upper ends the guide members 29 are rigidly secured in head members 30, and at their lower ends rigidly secured in foot members 31. Each of the members 30 is provided with a projection 32 having a socket to receive a supporting plate 33. The projections 32 are directed toward each other and the plate 33 thus connects the members 30 and maintains them in spaced relation. The member 33 is secured to the projections 32 by clamp bolts or other similar devices 34. The members 31 are connected by a transverse plate or bar 35. By this means a rigid frame is produced including the tubular guide members 29, head members 30, foot members 31, and transverse supports 33—35. Rotatable caster wheels 36 are attached to the lower face of the member 35 to enable the support to be readily moved from place to place.

Mounted upon the transverse member 33 is a shaft support including a base member 37 and vertical standards 38, the latter having bearings at their upper ends to receive a horizontal shaft 39. The base member 37 is detachably coupled to the supporting member 33 by bolts 40 carrying nuts, preferably wing nuts 41, so that the shaft support may be adjustably connected to the member 33. Disposed upon the lower transverse member 35 is a step 42 in which an operating screw 43 is mounted for rotation, the upper end of the screw extending through the supporting member 33 and likewise through the base member 37 of the shaft support and provided with a beveled gear 44 which engages with a similar beveled gear 45 on the shaft 39. The shaft 39 projects at one end and is hollow to receive an operating crank to enable the shaft 39 to be rotated, the base member 37 and the shaft 39 being disposed obliquely to the support 33, as shown in Figs. 5 and 6, to enable the crank to be applied without interfering with the adjacent members 30—32.

Engaging the screw 43 is a nut device 46 having lateral wings 47 spaced apart to receive plates 48, the plates being riveted or otherwise secured between the wings. Each of the guide members 29 is provided with a longitudinally directed slot or guide-way, indicated at 49 in Figs. 7 and 8 and the plate members 48 extend through these guide slots and into recesses in the lower ends of the standards 26 and riveted or otherwise secured to the standards. By this arrangement it will be obvious that when the screw 43 is rotated by motion imparted to the shaft 39 the nut 46 and the plates 48 will be moved vertically and carry the standards 26 with them. Thus the supporting member, shown in Fig. 13, may be adjusted vertically to any required extent within the range of movement of the nut 46 and its attachments.

The head members 30 are each provided with lateral wings in which leg devices 50 are pivoted at 51, the leg devices being thus arranged to swing toward and away from the guide members 29 and provided with casters 50′ at their lower ends. Pivoted at 52 to the leg members 50 are radius bars 53, the latter being pivotally connected at 54. By this arrangement when the bars 53 are disposed in longitudinal alinement, as shown in Fig. 1, the leg members 50 will be maintained in their outward position with their casters 50′ bearing upon the floor or ground upon which the device is located, and when turned into their upward position the leg members may be drawn toward each other, or substantially in parallel relation to the members 29, as shown in Fig. 8, to enable the support to occupy less space for transportation or storage, as hereafter explained. Projecting from each of the guide members 29 is a stop pin 55, and one of the radius bars 53 is provided with projections 56 spaced apart and engaging over the pin 55 to limit the downward movement of the radius bars, or hold them in the position shown in Fig. 1. By this means the guide members 29, together with their transverse connecting members 23—35, the standards 36 and the connecting members 21—22 are firmly supported when the leg members 50 are arranged in their distended position. At their lower ends each of the leg members 50 is preferably turned at right angles, as shown in Fig. 4, to increase the bearing surface and correspondingly increase the steadiness and rigidity of the support.

The table or platform portion of the improved device is preferably formed in a plurality of sections, a main central section and terminal sections. The main or central section is indicated as a whole at 57, while the terminal sections are indicated at 58. The central section 57 is in box-like form open at its lower side, as represented in Fig. 9, while the terminal sections are likewise in box-like form and one-half the length of the central section, so that the three sections when arranged side by side will form a box-like structure corresponding in length to the central section and corresponding in thickness to the depth of two of the sections, the table or platform sections when thus folded forming a closure to receive the support when folded, as hereafter explained.

The central section is formed with side

members 59—60 connected at their ends by transverse members 61—62. At its ends the member 61 is provided with right-angled webs 63 which bear over a portion of the sides 59—60 and are secured thereto by screws or other suitable fastening devices, while the transverse member 62 is provided with similar right-angled webs or projections 64 secured in a similar manner to the side members. The top or bearing face of the central section 57 is represented conventionally at 65, and preferably formed of what is known as veneering, the latter being constructed of a plurality of layers of wood superimposed and perforated to secure ventilation. The terminal sections are each formed with side members 66—67 similar to the side members 59—60 and in longitudinal alinement therewith when the sections are united, as shown in Figs. 1 and 2. At their inner ends the sides 66—67 are connected by a transverse member 68 having lateral terminals 69 bearing over and connected to the sides 66—67 in the same manner as the similar members 63—64 are connected to the sides 59—60. At the outer ends the sides 66—67 of the end sections of the top are coupled by a transverse member 70, the latter being provided with lateral projections 71 similar to the projections 69 and bearing over and secured to the sides 66—67. The terminal projections 71 are projected beyond the lower edge of the sides 67 and the lateral projections provided with studs 72, the object to be hereafter explained.

The transverse connecting member 70 is cut away intermediate the ends, as illustrated in Fig. 11, so that when the parts are folded the space centrally of the folded sections is reduced to increase the area within the folded sections of the table to accommodate the folded support, as hereafter explained.

The top members of the terminal sections are represented at 73, and correspond to the top section 65 of the central section. Projecting from the end members 61—62 are T-headed studs 74, and formed in the end member 68 of the terminal sections are recesses 75 to receive the T-headed projections, the top member 65 of the terminal sections being cut away, as shown at 76, to receive the T-heads. By this means the terminal sections may be coupled to the central section and supported therefrom, as shown in Fig. 1. Formed in the end member 68 of the terminal sections of the platform are sockets 77, and projecting from the terminals 61—62 of the central section are studs 78 to engage in the sockets when the platform sections are united. The headed studs 74 and the studs 78 coact with the recesses 75 and the sockets 77 to firmly couple the sections of the platform and prevent lateral or vertical displacement, while at the same time the sections may be readily disconnected when required. The various sections require no further fastening means to unite them in the position shown in Figs. 1 and 2.

Mounted to swing upon the sides 59—60 of the central platform section are locking members 79 which are adapted to engage over the lugs 72 when the table sections are united. Attached to the inner faces of the sides 59—60 are holding plates 80 having downwardly opening slots 81 to engage over the bolts 27, the heads 28 engaging in recesses in the adjacent sides 59—60. By this means the central table section may be mounted to swing relative to the support, as will be obvious.

Mounted to slide upon the inner face of each of the sides 59—60 is a latch bar 82 slotted, as shown at 83, to engage pins 84. The latch bars are thus adapted to be moved beneath the bolts 27 after the table has been mounted thereon, and thus prevent any upward displacement of the table, while at the same time the table may be readily released by simply moving the latch bars longitudinally.

Suitable sockets, represented at 119, are formed in the sides 59—60 to receive the headed bolts 27—28 when the support is collapsed and folded, the sockets thus serving to hold the support from rattling or looseness during transportation.

Means are provided in the improved device for holding the table in its adjusted position, and in Fig. 1 an approved means for accomplishing this result is shown consisting in a vertical guide bar 89 connected at its upper end by a bracket 90 to the vertical web 20 of the upper support, and connected by a lateral bracket 91 to the nut device 46. Slidable upon the bar 89 is a sleeve 92 having ears 93 spaced apart and between which a brace member 94 is pivotally mounted at 95. The sleeve 92 is provided with a spring actuated pin 96 adapted to engage in apertures 97 spaced apart in the bar 89, to enable the sleeve 92 to be adjusted vertically upon the bar and held at any desired point within the range of the apertures. Connected between the side members 59—60 of the central table section is a supporting member 98 to which the brace bar 94 is pivoted at its upper end at 99. By this simple means it will be obvious that the table may be tilted to any required extent by simply adjusting the sleeve 92 upon the bar 89 and actuating the stop pin device 96 to hold the table at any required inclination.

A bow-shaped rod 100 is preferably connected to one of the terminal sections of the table top to form a foot rest, and the transverse member 68 which is adjacent to the member 100 is provided with a hook 101 to support a vessel into which any liquids

which may accumulate upon the table will flow. If required a blanket or covering of suitable water-proof material, such as rubber or the like, may be disposed over the sections of the platform, as indicated at 102 and held in position by side strips 103. By this means any liquids or moisture which may be deposited will flow into the receptacle at the foot of the device.

The improved device will be found very useful for supporting a body during the embalming process, and may likewise be employed for supporting a casket.

The sections comprising the table or platform are adapted to be disconnected and the terminal sections disposed end to end and in parallel relation to the central section, the sides and end members of the table sections being in contact, as as will be obvious. By this means a box-like structure is produced corresponding in length and width with the table sections and corresponding in depth with two of the table sections, the covers 65 and 73 forming the sides of the box-like structure. When thus arranged the reduced terminals 70 will be located opposite the center of the central section 57, and by reducing the width of the member 70 the interior space or area will be sufficient to receive the support when collapsed.

When the improved device is to be folded the terminal table sections 58 are detached and the radius bars 53—54 "broken" upwardly and the legs 50 drawn inwardly, as shown in Fig. 8. The holding bolt 96 is then released to permit the sleeve 90 to slide freely upon the bar 89 and the central table section elevated to release it from the headed bolts 27—28 and the folded or collapsed support turned into parallel relation to the table top and inserted between the sides 59—60 and the headed bolts 27—28 disposed in the sockets 119, the sleeve 90 sliding freely upon the bar 89 and permitting this movement. The terminal sections are then disposed in position end to end with their open sides toward the open side of the central section and over the folded support and secured in position by actuating the members 79. The sides of the table sections will preferably be of wood while the end members will preferably be of metal.

In Figs. 14, 15 and 16 a modification in the construction of the means for adjusting the table relative to the support is shown, and consists of an arm 104 mounted to swing upon a pin 105 which is carried by the webs 21—22. At its outer end the arm 104 is forked as shown at 106 and a nut 107 provided with trunnions 108 is mounted to swing between the sides of the forked portion. The arm 104 is formed with a forked offset 115 which bears normally against the adjacent face of the web 20 and is adapted to receive a holding bolt 116 which operates through a slot 117 in the web 20 and is provided with a wing nut 123. By this means the arm 104 is held rigidly at right angles to the head device 20—21—22, but may be released and turned into parallel relation to the head device when the apparatus is to be folded. Attached to the under face of the top 65 of the central table section is a bar 109 having ears 110—110′ depending therefrom to receive the trunnions 111 of a head member 112, one of the ears 110′ being detachably held by a wing bolt and nut 118 to enable the head member to be released. A screw 113 is connected at its upper end in the head member 112 and operates through the nut 107. The screw is provided with an operating crank or handle 114. By this arrangement it will be obvious that when the member 114 is rotated the table will be adjusted upon its headed bolts 27 to any required extent within the range of the member 113. The table may thus be adjusted to any required inclination, or maintained in a level position, as preferred.

When the device is to be collapsed the wing nuts 118—123 are loosed to release the ear 110′ and arm 104 to permit the screw 113 and the arm 104 to be disposed into position to be folded with the collapsed support for insertion in the table top members.

Having thus described the invention, what is claimed as new is,

1. In a device of the class described, a frame including vertical guide members, supporting legs swinging at one end from said frame, radius bars pivoted to each other and to said legs, one of said bars having an open socket, a pin extending from said frame and engaged by said socket, a support having standards movable in said guide members, a table device mounted to swing upon said support, means for adjusting said standards in said guide members, and means for adjusting said table device upon said support.

2. In a device of the class described, a frame including vertical guide members connected at their upper and lower ends, a support having standards spaced apart movable respectively in said guide members, a table device mounted to swing upon said support, a screw mounted for rotation in the lower guide member connecting means and intermediate the guide members, a nut device extending in opposite directions and engaged respectively with said screw and having arms engaging said standards, means for rotating said screw to cause said nut to adjust said standards in said guide members, and means for adjusting said table device upon said support.

3. In a device of the class described, a frame including vertical guide members

spaced apart and connected at their upper and lower ends, a support including an upper transverse portion and vertical standards movable in said guide members, a base member having shaft bearings and detachably coupled to the upper connecting means of the guide-members, a screw mounted for rotation in said base member and on the upper and lower guide member connecting means, means whereby said screw operates to adjust said standards in the guide members, a shaft mounted for rotation in said bearings, intermeshing gears carried respectively by said shaft and screw, and a table device mounted to swing upon said support, whereby when said shaft is rotated said table device will be adjusted vertically.

4. In a device of the class described, a frame including upper and lower transverse members and vertical guide members spaced apart and connected to said upper and lower members, said guide members having longitudinal slots, a support having standards movable respectively in said guide members, a table device mounted to swing upon said support, a screw mounted for rotation in said transverse members and intermediate said guide members, a nut device engaging said screw and having arms extending in opposite directions and through the slots of said guide members, and engaging the standards therein, means for rotating said screw to cause said nut to adjust said standards in said guide members, and means for adjusting said table device upon said support.

5. In a device of the class described, a frame including vertical guide members, a support including standards movable in said guide members, means for coupling said standards, a table device mounted to swing upon said support, a screw mounted for rotation in said frame, a nut device engaging said screw and having arms engaging said standards, means for rotating said screw to cause said nut to adjust said standards in said guide members, a guide device connected respectively to said standard coupling means and to said nut device, a sleeve adjustable upon said guide device, and an arm pivoted to said sleeve and to said table device.

6. In a device of the class described, a frame including vertical guide members, a support having standards movable in said guide members and provided with lateral pins, a table device having downwardly opening slotted members engaging over said pins and whereby the table device is mounted to swing upon said support, catches slidably engaging said pins and holding the table device from upward displacement, means for adjusting said standards in said guide members, and means for adjusting said table device upon said support.

7. In a device of the class described, a frame including vertical guide members, supporting legs carried by said frame and foldable against the same, a support having lateral trunnions and standards movable in said guide members, a table device formed of a central section and terminal sections and foldable into parallel relation to form a closure for the frame and the support and its legs when collapsed, said central table section having sockets arranged in pairs spaced apart, one pair of said sockets adapted to receive said trunnions when the frame guide members and foldable legs are in open position and the other pair of sockets to receive the trunnions when the frame guide members and the foldable legs are collapsed.

8. In a device of the class described, a table comprising a central section and terminal sections, each of said sections comprising terminal members and side members and each terminal section provided with projections which bear over the adjacent portions of the central section when the sections are collapsed to prevent lateral displacement, and said table sections having coacting headed studs and sockets to receive the studs and to hold the sections in position end to end when distended.

9. In a device of the class described, a table device comprising a central section and terminal sections, each section comprising side members spaced apart and terminal members having projections bearing over the adjacent portions of the side members, said terminal members having coacting headed studs and sockets to receive the studs whereby the sections are detachably coupled end to end and the outer projections of the terminal members having catch lugs, and a holding device carried by the central table section and adapted to engage the catch lugs to hold the sections in closed relation.

In testimony whereof I affix my signature.

WILLIS O. CANOUTS. [L. S.]

Copies of this patent may be obtained for five cents each, by addressing the "Commissioner of Patents, Washington, D. C."