AUSTRALIA

Patents Act 1990

NOTICE OF ENTITLEMENT

Patent Attorney Services
26 Ellingworth Parade,
Box Hill, Victoria 3128, Australia
Telephone: (03) 890 7070

664026

[APPLICANT]

I/~~We~~, KURT ZACHHUBER

of Karlstr. 111, D-8122 Penzberg, Germany

being the Applicant(s) in respect of ☐ ~~the accompanying application~~
☒ Application No. 11,804/92

state the following:

1. I am/~~We are~~ the Nominated Person(s) to whom I/~~we~~ request the patent to be granted.

2. [INVENTORS]

(a) ☒ I am/~~We are~~ the inventor(s) of the invention and I am/we ~~are~~ entitled to the grant of a patent under Section 15(1)(a) of the Patents Act.

(b) ☐ ~~[Name(s) of Inventor(s):]~~

of [Address(es) ~~of~~ Inventor(s):]

is/are the inventor(s) of the invention and the Nominated Person(s) is/are entitled to the grant of a patent by virtue of the following facts:

☐ The inventor(s) made the invention in the course of employment by the Nominated Person(s) and the Nominated Person(s) would, on the grant of a patent for the invention, be entitled to be assignee(s) of the patent.

☐ The Nominated Person(s) is/are the assignee(s) of the inventor(s) in respect of the invention.

☐ ~~[Other situation entitling Nominated Person(s) to the patent:]~~

3. [PRIORITY CLAIM]

(a) ☒ [Convention applications] The basic application(s) identified in the Patent Request was/~~were~~ the first application(s) made in a Convention country in respect of the invention the subject of this application. Priority is claimed under Part 2 of Chapter 8 of the Patents Act from the basic application(s) identified in the Patent Request, and I am/~~we are the Applicant(s) is/are~~ entitled to claim such priority since:

☒ I am/~~we are/the Applicant(s) is/are~~ the basic applicant(s) in respect of the basic application(s).

☐ ~~I am/we are/the Applicant(s) is/are the assignee(s) of rights from applicant(s) in respect of the basic application(s), these rights including the right to file patent application(s) in Australia claiming the priority of the basic application(s).~~

(b) ☐ ~~[Divisional applications] Priority is claimed under Section 39 of the Patents Act from the original application identified in the Patent Request, and I am/we are/the Applicant(s) is/are entitled to claim such priority since:~~

☐ I am/we are/the Applicant(s) is/are the applicant(s) in respect of the original application.

☐ I am/we are/the Applicant(s) is/are entitled under an assignment or agreement or by operation of law to request the patent to be granted to me/us/the Applicant(s) and claiming priority from the original application.

(c) ☐ [Complete application after Provisional application] Priority is claimed under Section 38 of the Patents Act from the Provisional application(s) identified in the Patent Request, and I am/we are/the Applicant(s) is/are entitled to claim such priority since:

☐ I am/we are/the Applicant(s) is/are the applicant(s) in respect of the Provisional application(s).

☐ I am/we are/the Applicant(s) is/are entitled under an assignment or agreement or by operation of law to request the patent to be granted to me/us/the Applicant(s) and claiming priority from the Provisional ~~application(s).~~

Date: 05.07.93

Signature: Kurt Zachhuber

AU9211804

(12) PATENT ABRIDGMENT (11) Document No. AU-B-11804/92
(19) AUSTRALIAN PATENT OFFICE (10) Acceptance No. 664026

(54) Title
FLOOR TREATING MACHINE

International Patent Classification(s)
(51)[5] **A47L 011/30**

(21) Application No. : **11804/92** (22) Application Date : **30.01.92**

(87) PCT Publication Number : **WO92/13480**

(30) Priority Data

(31) Number	(32) Date	(33) Country
4103087	01.02.91	DE GERMANY
9115713	18.12.91	DE GERMANY
4200630	13.01.92	DE GERMANY

(43) Publication Date : **07.09.92**

(44) Publication Date of Accepted Application : **02.11.95**

(71) Applicant(s)
KURT ZACHHUBER

(72) Inventor(s)
KURT ZACHHUBER

(74) Attorney or Agent
PATENT ATTORNEY SERVICES , 26 Ellingworth Parade, BOX HILL VIC 3128

(56) Prior Art Documents
EP 424229
US 3866541
US 3345671

(57) Claim

1. A machine for the scrubbing of floors with a moving chassis, a floor scrubbing device, in particular grinding, polishing or abrasive device, and with a vacuum feature, where the floor scrubbing device has at least two rotating scrubbing elements, in particular grinding, polishing or abrasive elements, at least one of which is adjustable to vary the operating width of the floor scrubbing device, and where the vacuum device is composed of at least one vacuum head located near the floor in the working direction behind the floor scrubbing device, and connected with the adjustable scrubbing element there is an adjustable vacuum element or an adjustable stripper bar that sends particles located on the floor and/or liquid to the vacuum head or to a vacuum strip connected to it, so that the operating width of the vacuum device will be adapted automatically to the working width of the floor scrubbing device, characterised in that features are provided that prevent a double scrubbing of the floor in regions where the working regions of two scrubbing elements overlap, since one of the two scrubbing elements is brought out of contact with the floor in this region.

· OPI DATE 07/09/92 APPLN· ID 11804 / 92
AOJP DATE 15/10/92 PCT NUMBER PCT/EP92/00198
INTE
INTE
BER DIE
NS (PCT)

(51) Internationale Patentklassifikation 5 : A47L 11/30

A1

(11) Internationale Veröffentlichungsnummer: WO 92/13480

(43) Internationales Veröffentlichungsdatum: 20. August 1992 (20.08.92)

(21) Internationales Aktenzeichen: PCT/EP92/00198

(22) Internationales Anmeldedatum: 30. Januar 1992 (30.01.92)

(30) Prioritätsdaten:

P 41 03 087.7	1. Februar 1991 (01.02.91)	DE
G 91 15 713.7 U	18. Dezember 1991 (18.12.91)	DE
P 42 00 630.9	13. Januar 1992 (13.01.92)	DE

(71)(72) Anmelder und Erfinder: ZACHHUBER, Kurt [DE/DE]; Karlstr. 111, D-8122 Penzberg (DE).

(74) Anwalt: GRÄTTINGER, Günter; Wittelsbacherstraße 5, Postfach 16 49, D-8130 Starnberg (DE).

(81) Bestimmungsstaaten: AT (europäisches Patent), AU, BE (europäisches Patent), CA, CH (europäisches Patent), DE (europäisches Patent), DK (europäisches Patent), ES (europäisches Patent), FR (europäisches Patent), GB (europäisches Patent), GR (europäisches Patent), HU, IT (europäisches Patent), JP, LU (europäisches Patent), MC (europäisches Patent), NL (europäisches Patent), PL, RU, SE (europäisches Patent), US.

Veröffentlicht
Mit internationalem Recherchenbericht.
Mit geänderten Ansprüchen und Erklärung.

664026

(54) Title: FLOOR TREATING MACHINE

(54) Bezeichnung: BODENBEARBEITUNGSMASCHINE

(57) Abstract

A floor treating machine has a floor treating device with at least two floor treating bodies of which at least one is suspended so as to be alterable in position such that the working width of the device can be changed. To the at least one movable floor treating body is coupled a movable suction component (46, 64) or stripping blade (20) which copies the movements of the movable floor treating body. The movable suction device or stripping blade is allocated to a suction device, the operational width of which is automatically adapted to the operational width of the floor treating device.

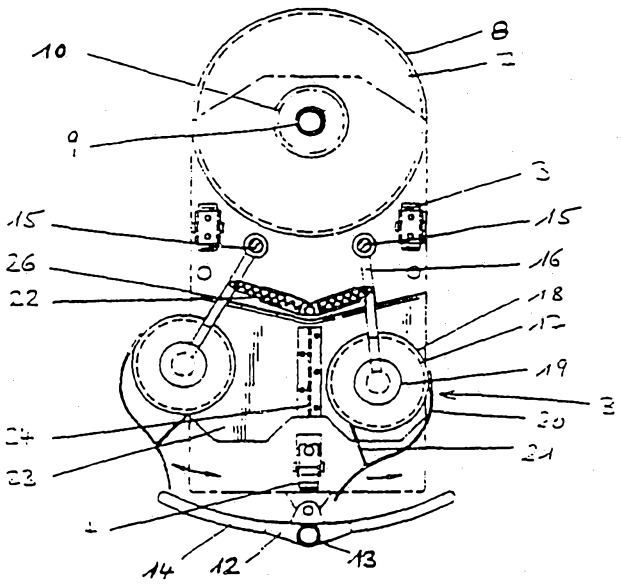

(57) Zusammenfassung

Eine Bodenbearbeitungsmaschine besitzt eine Bodenbearbeitungseinrichtung mit mindestens zwei Bodenbearbeitungskörpern, von denen mindestens einer in der Weise lageveränderbar aufgehängt ist, daß die Arbeitsbreite der Bodenbearbeitungseinrichtung verändert werden kann. Mit dem mindestens einen lageveränderlichen Bodenbearbeitungskörper ist ein lageveränderbares Saugelement (46, 64) oder eine lageveränderbare Abstreifleiste (20) gekoppelt, welche den Bewegungen des lageveränderbaren Bearbeitungskörpers folgt. Das lageveränderbare Saugelement bzw. die lageveränderbare Abstreifleiste ist einer Saugeinrichtung zugeordnet, deren Arbeitsbreite auf diese Weise der Arbeitsbreite der Bodenbearbeitungseinrichtung selbsttätig angepasst wird.

Code: 533-23044

FLOOR SCRUBBING MACHINE

Description

The present invention pertains to a machine for the scrubbing of floors with a moving chassis, a floor scrubbing device, in particular a grinding, polishing or scrubbing device, and with a vacuum feature, where the floor scrubbing device has at least two rotating scrubbing elements, in particular grinding, polishing or scrubbing elements, at least one of which is adjustable to vary the operating width of the floor scrubbing device, and where the vacuum device is composed of at least one vacuum head located near the floor in the working direction behind the floor scrubbing device, and connected with the adjustable scrubbing element there is an adjustable vacuum element or an adjustable stripper bar that sends particles located on the floor and/or liquid to the vacuum head or to a vacuum strip connected to it, so that the operating width of the vacuum device will be adapted automatically to the working width of the floor scrubbing device.

A floor scrubbing machine of this kind is known from US-A-3,345,671. Now, this known machine is designed as a kind of scrubbing vacuum and polishing machine and has two adjustable plate brushes located in the working direction in front of a fixed plate brush. In case of a narrow working width, the two adjustable brushes will be retracted toward the middle of the machine. In this position they will clean the floor even in the

AUSTRALIA PATENT OFFICE

region where the fixed brush is cleaning the floor. Thus the floor will be scoured in the outer regions of the working width of the machine only by one particular brush, whereas in the middle region a double scouring will occur. This will lead to an adverse strip formation on the cleaned floor.

Another related type of floor scrubbing machine is known from US-A-3,866,541. This machine is likewise designed as a scrubber vacuum cleaner and has one adjustable and one fixed plate brush. The problem described above will occur similarly for this machine as well.

One additional floor scrubbing machine with an adjustable working width is known from US-A 3,277,511. It is designed as a scrubber vacuum cleaner and has a front mounted scrubber head that is formed by the placement of several plate brushes in a line side by side. This elongated scrubber head is pivot mounted to the chassis about a vertical axis so that one of the plate brushes can move along a circular path. Depending on the adjusted position of the scrubber head (transverse or more or less oblique to the working direction) the working width defined by the projection of the scrubber head in the working direction is adjustable. The working width of the vacuum device which is composed of a vacuum strip connected with the vacuum head and positioned in the rear region of the machine, thus can be adapted to the working width of the scrubber device so that a lateral extension, which is pivot mounted to the vacuum strip about a vertical axis, will be pivoted out more or less to a significant extent.

The disadvantage of these machines rests particularly in their poor handling ability and in low operating ease. Since the

AUSTRALIA MB PATENT OFFICE

extension of the vacuum strip protruding over the working width of the floor scrubbing device can get caught on obstacles, damage adjacent articles or itself and result in injury. Furthermore, during the continually changing working width of the scrubber device, for example, due to obstacles in the working area, like chair legs and similar features, a continual, permanent adaptation of the working width of the vacuum device by hand is very time-consuming. A further disadvantage rests in an unsatisfactory, nonuniform result of operation. Since, on the one hand, in tight curve motions of the scrubber vacuum cleaner according to US-A 3,277,511, a strip in an inner curve will not be covered by the scrubber device so that this strip will remain moist; and on the other hand, the removal of the liquid film in a relatively large region will not be possible, for example, when cleaning the corners of a room when the machine is moved forward up to the wall and is then moved backward away from the wall. The known scrubber vacuum cleaners with variable working width thus are not used in practice. And the same problems exist for other floor scrubbing machines designed according to the same principle, like, e.g., scrubber and polishing machines, regardless of whether liquid or particle-like solids (abrasives) are to be vacuumed up.

The present invention is based on the problem of improving the operating results obtained with relation to floor scrubbing machines with adjustable working width.

According to this invention, this problem will be solved in that features are provided that prevent a double scrubbing of the floor in regions where the working regions of two scrubbing elements overlap, since one of the two scrubbing elements is

AUSTRALIA PATENT OFFICE

brought out of contact with the floor in this region. Regardless of the working width of the floor scrubbing machine already adjusted, a multiple processing of the floor thus will no longer occur. The formation of undesirable strips will thus be safely prevented.

The principle underlying the invention can be implemented on all floor scrubbing machines that have a rotating scrubbing element composed of a floor scrubbing device with an adjustable working width, in particular for machines with abrasive, polishing or scouring features. The corresponding scrubbing elements, in particular abrasive, polishing or scouring elements can likewise have any configuration known to the state of engineering; in particular, they can be designed as plate brushes, roller brushes, abrasive disks or pads. The scrubber vacuum cleaner illustrated below with a rotating brush has advantages that apply accordingly also for the other claimed floor scrubbing machines. Solely for reasons of clarity, where this appears useful, will reference be made to the actual design as a scrubber vacuum cleaner.

The device provided on the invented machine to prevent a double scrubbing of the floor is composed preferably of at least one cover plate with an allocated brush near the floor, on which the bristles of the corresponding brush run along in the region where the bristles of the other brush are in contact with the floor. The term "region" in this case is meant to be the strip directed in the working direction that is being treated by the corresponding brush during the forward movement of the machine in the working direction. Thus, the cover plate will prevent a multiple scrubbing of the floor, since floor contact by the



bristles of the one brush will be prevented in the region where the bristles of the other brush are cleaning the floor. Thus, the floor will be cleaned uniformly over the entire working region of the floor scrubbing machine, regardless of the particular adjusted working width, so that the formation of strips due to multiple scrubbing will be reliably avoided.

In the case where the floor scrubbing machine has at least one frontal positioned main brush unit, it is useful to provide a single cover plate whose width corresponds to the working width of the main brush unit. In the case of floor scrubbing machines without a main brush unit with two supplemental brush units located one behind the other in the working direction, it is useful to connect the one brush unit with an adjustable cover plate in the region of the second brush unit; for example, in this case the cover plate is located in the region of the rear brush unit and is coupled with the front brush unit and displaced during a change in the working width. In this case, the cover plate will have a width corresponding to the working width of the front group of brushes, and this will prevent the rear group of brushes from operating in the region where the front group of brushes has just cleaned the floor. In this kind of configuration of the floor scrubbing machine according to this invention, one particular advantage is obtained in that both brush units can be moved in both directions out from their middle position; given a correspondingly large working width the front brush unit thus can move out to the left and the rear brush unit can move out to the right, or also the front brush unit can move out to the right and the rear brush unit can move out to the left from the chassis. This is an advantage in the cleaning of

AUSTRALIA PATENT OFFICE

corners. In another useful design of the floor scrubbing machine according to this invention that prevented double processing and having two brush units positioned one behind the other, a cover plate is provided in fixed position in the region of each of the brush units. Both cover plates are to be preferably essentially half as wide as the working width of the corresponding, allocated brush unit; they are positioned offset to each other, so that the covered regions will not overlap, but rather are adjoined with the middle of the machine. For example, with regard to this kind of floor scrubbing machine, the cover plate allocated to the front brush unit will cover the left half of the (retracted) brush group, while the cover plate allocated to the rear brush unit will covert he right half of the (retracted) rear brush unit. With this kind of floor scrubbing machine the front brush unit will always process the region of the working strip located to the right of the middle of the machine, while the rear brush unit will clean the region of the working strip located to the left of the middle of the machine, regardless of the particular working width set at the moment. The front brush unit in this case will only extend to the right, and the rear brush unit to the left.

A further configuration of the device that will prevent a double scrubbing of the floor by floor scrubbing machines with plate brushes, made such that the bristle holders are combined into casings that can be displaced in an axial direction in the plates, so that each bristle holder will be pressed onto the floor by a spring element acting on the casing; an electromagnet located above the plate brushes will attract the casing held in one plate brush against the force of the spring element in the

AUSTRALIA PATENT OFFICE

regions where another brush is cleaning the floor, so that the bristle holder held in the particular casing will be brought out of contact with the floor in the corresponding region.

As for the machine according to the related US-A-3,345,671, an adjustable vacuum element or an adjustable scrubber strip is coupled to the and/or to each adjustable scrubbing element; said scrubber strip sends particles and/or liquid located on the floor to the vacuum head or to a vacuum strip connected to it, so that the working width of the vacuum device will be adapted automatically to the working width of the floor scrubbing machine. Due to the coupling (preferably mechanical) with the allocated adjustable scrubbing element, as this element moves, the corresponding vacuum element or the corresponding scrubber strip will also be moved accordingly when the working width of the floor scrubbing machine is being changed. The scrubber strip located in the working direction behind each adjustable processing element is used to guide the water or particle film left behind on the floor inward and to send it to the region covered by a central vacuum strip. The separate vacuum element provided as an alternative to this behind every adjustable scrubbing element, will likewise remove the water or particle film left behind on the floor by the scrubbing element. To do this, it is preferable to connect the scrubbing element with a central vacuum device, that is, to a central vacuum fan and a central separator device.

It is particularly useful when the adjustable vacuum element coupled with every adjustable scrubber brush, or the corresponding scrubber strip, is located directly behind the allocated brush, that is, at the smallest possible distance from

AUSTRALIA PATENT OFFICE

it. This will minimize the region of the floor where a vacuuming of the liquid film will not occur due to curved motion and/or when using the scrubber vacuum cleaner with back and forth motion. If necessary, the corresponding, adjustable vacuum elements or scrubber strips can be located under the chassis of the scrubber vacuum cleaner in order to minimize the region where the vacuuming is omitted.

The configuration of the brushes of the scrubber vacuum cleaner can be arranged in numerous ways. For example, one or more front mounted, fixed-position main brush(es) can be provided, and also behind it/them, in the working direction, one or two adjustable supplemental brushes. In a different, useful configuration of the scrubber vacuum cleaner according to this invention, exclusively adjustable brushes, possibly combined into units, are provided that are located one behind the other in the working direction. The latter configuration has the advantage that the corresponding floor scrubbing machine can be of very compact design and is also able to clean corners while retaining a large working width.

With regard to the scrubber vacuum cleaner according to this invention, roller brushes and plate brushes can be used in the same way. In general, roller brushes will be positioned to rotate transverse to the working direction; plate brushes are to be combined preferably into groups or units of at least two brushes each that are positioned side by side transverse to the working direction and that are contrarotating, so that the plate brushes forming a group can be moved together to change the working width.

AUSTRALIA PATENT OFFICE

The term "main brush" will be used below synonymously for "fixed-position brush" and the term "supplemental brush" will be used synonymously for "adjustable brush."

A high degree of flexibility in the use of the scrubber vacuum cleaner will be obtained when it has a central main brush unit and two adjustable supplemental brush units located behind it; of these two, one is adjustable to protrude to one side, and the other to protrude to the other side, from the working region of the main brush unit. The particular position of each of the two supplemental brush units in this case is to be selected preferably independently of the position of the other supplemental brush unit. The mounting of the two supplemental brushes in the scrubber vacuum cleaner in this case can be symmetrical to its longitudinal axis, that is, in the retracted position the two supplemental brushes are located side by side. In this case the working width of the single, supplemental brushes is limited to nearly half the working width of the main brush, that is, the total working width of the machine can be varied in a ratio of about 1 to 2. However, the two supplemental brushes can also be positioned in an echelon one behind the other in the longitudinal direction of the machine. In this case, the working width of the supplemental brushes can be nearly equal to the working width of the main brush, that is, the total working width can be varied in a ratio of nearly 1 to 3. In order not to make the handling of the machine too difficult due to an excessive length, this kind of echeloned configuration of supplemental brushes can be provided in particular when using roller brushes.

In order to improve the adaptation of the scrubber strips or of the vacuum elements to the various possible positions of the

AUSTRALIA PATENT OFFICE

supplemental brushes, the particular inner ends of the scrubber strips and/or vacuum elements preferably run in the longitudinal guides, while the outer ends are securely connected to the coverings or frames allocated to the supplemental brushes. In one particularly preferred design of the scrubber vacuum cleaner according to this invention, the vacuum elements or scrubber strips coupled with the adjustable brushes represents a telescoping extension of the central vacuum strip. That means that the inner ends of the scrubber strips or vacuum elements will be run into or up to the vacuum strip. This will produce a very compact and highly efficient design of the elements used to vacuum up the water film.

In the working direction in front of the supplemental brushes there are preferably ejector bars that prevent table legs or similar items from getting between the housing of the scrubber vacuum cleaner and an extended supplemental brush. Ejector bars of this kind also held on their one end to a fixed point and at their other end in a longitudinal guide in order to allow them to adapt to the different possible positions of the supplemental brushes. In this case it is preferable to articulate the front end of each ejector bar in a fixed point at the chassis of the scrubber vacuum cleaner, while the particular rear end will slide in a longitudinal guide that is provided at the cover or at the frame of each supplemental brush.

There are different possibilities available for attachment of the supplemental brushes to the scrubber vacuum cleaner. For example, the supplemental brushes can be mounted to pivot arms whose other end is articulated to the chassis of the scrubber vacuum cleaner; the various possible positions of the

AUSTRALIA PATENT OFFICE

supplemental brushes in this case rest on a circular path. Furthermore, a linear movement of the supplemental brushes will be possible in a guide positioned transverse to the working direction of the scrubber vacuum cleaner. This kind of mounting of the supplemental brushes is useful in particular on scrubber vacuum cleaners that have adjustable brushes or brush groups exclusively. In this case it is preferable to mount the brushes or groups of brushes in a frame designed as a skid, where said frame is mounted, for example, on two guide rails by using guide rollers, and these guide rails are provided at the underside of the chassis. Finally, it can be an advantage, in particular when using roller brushes as supplemental brushes, to pivot mount them to the scrubber vacuum cleaner by using a parallelogram guide.

The drive unit for the supplemental brush(es) can be provided by means of a mechanical or hydraulic coupling with the drive unit for the main brush. In this configuration we have a comparatively small structural expense. The mechanical coupling of the main brush and supplemental brushes will preferably have a speed translation, that is, the supplemental brushes will rotate at a higher speed than the main brush. In this manner the scrubbing effect reduced by the smaller contact pressure of the supplemental brushes on the floor compared to the main brush, will be compensated by a greater frequency of the scrubber bristles, so that the main brush and the supplemental brushes will have the same cleaning power. However, each supplemental brush can also have its own drive motor. In this form of the drive, each supplemental brush can be set out of operation as soon as it goes to its fully retracted position (minimal operating width) so that any unnecessary wear on the bristles will be avoided.

AUSTRALIA PATENT OFFICE

The scrubber vacuum cleaner according to this invention can have spring elements that bring the supplemental brushes into their final, extended position. When a supplemental brush extended in this manner under spring force runs up against an obstacle with its extended ejector bar, then the affected supplemental brush will be pressed inward by the obstacle against the spring force, but only enough to pass by the obstacle. In this way the entire working width will be adapted automatically to the particular, local space relationships. Alternatively, a hydraulic change in position of the supplemental brushes by means of a known hydraulic cylinder can come into consideration, and also an electric position change by means of servomotors.

At the leading edge of the adjustable brush or brush units it is useful to provide a sensor bar that is connected with a sensor switch. When the corresponding brush or brush group runs up against an obstacle, then the sensor switch will be operated by the pressed in sensor bar and controls the position change of the corresponding brush/group of brushes in order to effect a reduction in the working width. In the case of hydraulically controlled working width, to effect this with a sensor switch it should be connected to a valve that controls the actuation of the hydraulic cylinder used for positional change of the brush/group of brushes in such a manner that the corresponding brush/group of brushes will be retracted.

Sample designs of the floor scrubbing machine according to this invention will be explained in greater detail below with reference to the figures. We have:

AUSTRALIA PATENT OFFICE

Figure 1: A side view of one sample design of a floor scrubbing machine according to this invention with one main brush and two supplemental brushes and two scrubber strips located behind them,

Figure 2: A horizontal cross section through the scrubber vacuum cleaner according to Figure 1 along line II-II,

Figure 3: A horizontal cross section through a scrubber vacuum cleaner according to this invention with a linear guide for the supplemental brushes and with scouring strips located behind them,

Figure 4: A horizontal cross section through a scrubber vacuum cleaner with a supplemental brush configuration according to Figures 1 and 2, where one vacuum element is located behind each of the supplemental brushes,

Figure 5: A horizontal cross section through a scrubber vacuum cleaner with supplemental brushes that are designed as roller brushes mounted to parallel guides,

Figure 6: A horizontal cross section through a scrubber vacuum cleaner where the vacuum elements behind the adjustable brushes and the fixed vacuum strip form a telescoping, extending unit,

Figure 7: The view of the chassis, from below, of another sample design of a floor scrubbing machine according to this invention, and

Figure 8: A side view of the chassis according to Figure 7.

The scrubber vacuum cleaners illustrated in Figures 1-6 have a housing 1 in a known manner, in which the various aggregates and containers are housed, like, in particular, the vacuum fan, separator devices for the picked up dirt, the supply tank and the dosing device for the scrubbing liquid and similar materials.

AUSTRALIA PATENT OFFICE

The housing 1 is supported on three rollers on the floor 2 where two rollers are nonsteerable idle rollers 3 and the third roller is designed as a guide roller 4 that pivots about a perpendicular axis. At the rear end of the housing 1 there are two handles 5 to which the operator can control the scrubber vacuum cleaner. The control console 6 located between the handles 5 contains the control and operating instruments necessary for operation. To this extent the design of the illustrated scrubber vacuum cleaners is identical to those according to the state of the art.

Likewise known from the state of engineering, and thus not described in detail, is the placement of a scouring brush rotating about a vertical axis in the front region of the scrubbing vacuum cleaner (Figures 1-4,and 6). In the terminology of the present application, the scrubbing vacuum cleaner according to Figures 1-4 and 6 has a main brush 7 designed as a plate brush that is covered by a main brush hood 8. In this case, the main brush hood will be supported by means of a hollow support 9 by the housing, where, in the interior of the hollow support the drive shaft is running and will transfer the drive power from the main brush drive unit 10 to the main brush 7. At the rear end of the scrubbing vacuum cleaner according to Figures 1-5 there is a vacuum head 12 pivot mounted around a vertical axis 11; this vacuum head is connected by a vacuum hose 13 to the vacuum fan located in the interior of the housing 1. The vacuum strip 14 extends out from both sides of the vacuum head 12; this strip has a rubber lip that slides on the floor and feeds the liquid to be sucked up to the vacuum head. The vacuum strip 14 in this case protrudes beyond the housing 1 of the scrubbing vacuum cleaner in order to assure a reliable pick up of the entire liquid film.

AUSTRALIA PATENT OFFICE

The scrubber vacuum cleaner illustrated in Figures 1, 2, 4 and 6 has two pivot lugs 15 on the underside of its chassis, to which one pivot arm 16 each is pivot mounted about a vertical axis. Opposite the articulation point of each pivot arm 16 there is a supplemental brush device consisting of a supplemental brush 17 designed as a plate brush, a supplemental brush hood 18 covering said supplemental brush, and also a supplemental brush drive 19. In the working direction behind the supplemental brushes there is a scrubbing strip 20 for the machine according to Figures 1 and 2 that is attached externally to the supplemental brush hood 18 and internally is pressed against the floor 2 by an additional support 21 that is also attached to the supplemental brush hood (in Figure 1 the scrubber strip 20 is shown without its rear section so that the components located farther to the inside (cover plate 23, guide roller 4) can be seen). The two scrubber strips 20 in this case run at an angle to the rear, then join together and, in this way, guide the water film left behind by the supplemental brushes into the central region passed over by the vacuum strip 14. Each of the two pivot arms 16 will be pressed outward to the side by one spring arm 22, provided the supplemental brush hoods do not encounter an obstacle. Only to illustrate the various, possible positions of the supplemental brushes is the right supplemental brush shown in Figure 2 in its retracted position (B) and the left supplemental brush is illustrated in its partially extended position.

In the region of the supplemental brushes a cover plate 23 extends across the entire width of the main brush of the scrubber vacuum cleaner according to Figures 1, 2, 3 and 5. This cover

AUSTRALIA PATENT OFFICE

plate 23 is attached to the underside of the housing 1 by using screws 25 by means of a holder 24 riveted to the plate. The suspension of the cover plate 23 is arranged so that it will be moved at a short distance above the floor 2. The front edge 26 of the cover plate 23 is curved upward in order to allow escape of the cover plate upward when running up onto a possible obstacle or when passing over an unevenness in the floor.

The scrubber vacuum cleaner shown in Figure 3 differs from that according to Figures 1 and 2 essentially only through the design of the articulation of the supplemental brushes to the machine and accordingly through the kind and manner in which the position adjustability of the supplemental brushes is effected. And of course, according to Figure 3 a linear guide for the two supplemental brush units is provided that is composed of two mutually parallel and opposing guide strips 27 running transverse to the longitudinal axis, and by a slide element 28 that can slide into the rocker arm represented by the guide strips. The two guide strips 27 in this case are positioned at a distance from each other so that the hollow support that connects the supplemental brush drive unit 19 and the particular supplemental brush hood 18 together can pass between them and so that the particular drive shaft for the supplemental brush 17 can also pass through. The corresponding hollow support is attached to the slide element 28 by a support arm 29. The guide strips 27 used as rocker arm and the slide elements 28 are tailored to each other so that the transfer of both horizontal and also vertical forces will be possible. Spring legs 22 that are articulated to a guide strip 27, on the one hand, and to a lever actuating the slide element 28, on the other hand, press the slide elements and

AUSTRALIA PATENT OFFICE

thus the supplemental brush units suspended from them, outward to the side. Thus the supplemental brushes automatically take on the extended position (A) provided that they are not forced by an obstacle into the retracted position (B) or into any other intermediate position.

The scrubber strips 20 according to Figure 3 are attached at their outer ends in turn to the particular supplemental brush hood 18, while longitudinal guides 30 are provided for mounting of their inner ends. These guides consist of one guide rod 31 securely attached to the chassis and one slide piece 32 sliding on it, with which the inner end of the particular scrubber strip 20 is securely attached. The two guide rods 31 run at an angle to the rear, toward each other, in order to create an effective transport of the water film to the interior.

According to Figure 3 it is also provided that, in the working direction, ejector bars 33 are provided in front of the supplemental brush units that prevent table legs or similar items from getting between the housing and one supplemental brush. Every ejector bar 33 is articulated at its front end with a mounting point 34 provided at the chassis. The rear end of each ejector bar 33 is longitudinally adjustable and is run into a guide casing 35 that is attached to the particular supplemental brush hood 18. In this manner the ejector bars 33 can be optimally adapted to the particular position of the corresponding supplemental brush unit. Otherwise the configuration of the scrubber vacuum cleaner according to Figure 3 corresponds to that of the scrubber vacuum cleaner illustrated in Figures 1 and 2, so that any further explanation in this regard is unnecessary.

AUSTRALIA PATENT OFFICE

Now, with regard to the scrubber vacuum cleaner according to Figure 4, the guide of the supplemental brush occurs as is described in connection with Figures 1 and 2. But in contrast to Figures 1 and 2, where an ejector strip is provided behind the supplemental brush that directs the water film on the floor to the vacuum strip 14 located at the rear of the machine, the design represented in Figure 4 has two vacuum elements designed as vacuum spouts 46 in the travelling direction behind the supplemental brush. The vacuum spouts are securely attached to the supplemental brush hoods 18; their structure corresponds essentially to that of the vacuum strip 14. The support 47 for connection of the vacuum hose is located in the interior third of each vacuum spout. The vacuum spouts 46 are connected by means of the corresponding vacuum hoses to the vacuum fan to which the vacuum strip 14 is also connected.

With regard to the design in Figure 5, both the main brush 7 and also the supplemental brushes 17 are designed as roller brushes with a horizontal, transverse running rotational axis. The main brush 7 in this case is held in a downwardly open, U-shaped frame 41 that is attached to the underside of the housing by means of two supports 42. Also, the supplemental brushes 17 are seated in corresponding U-shaped, downwardly open frames 43 that are in turn articulated by means of a parallelogram guide composed of two guides 44 to the frame 41 of the main brush 7. Each of the parallelogram guides has been allocated one spring leg 22 that is tensioned between a central, fixed-housing articulation point 45 and the particular interior of the two guides 44 and presses the supplemental brushes units outward to the side.

AUSTRALIA PATENT OFFICE

The scrubber strips 20 have their outer ends connected securely to the particular outer section of the corresponding frame 43. Guide eyelets 46 are provided at the housing to control the inner ends of the scrubber strips 20. The scrubber strip 20 runs in and is length-adjustable in said eyelets. Thus we have an essentially smooth adaptation of the guide strips to the particular setting of the supplemental brush unit as has been described in connection with Figure 3. The configuration of the ejector bars 33 and of their mount was already described in connection with Figure 3, so that the reader is referred to the discussion there.

The scrubber vacuum cleaner illustrated in Figure 6 corresponds essentially to that of Figure 4. It differs from the latter by having a differently designed configuration of the elements used for vacuuming up the water film. In this case of course, the vacuum spouts 46 coupled with the adjustable brush 17 represents a telescoping extension of the central vacuum strip 14. To do this, the vacuum strip 14 passes around the two vacuum spouts 46 that are mounted to the supplemental brush hoods 18 by using retaining irons 48. At the outer ends 49 of the vacuum strip 14 this strip is sealed by a plug against the vacuum spouts so that the inlet of adjacent air into the vacuum strip 14 will be prevented. The vacuum strip 14 in this case is securely attached to the chassis and is connected, in the manner described, to the vacuum fan by means of a vacuum hose 13; a separate connection of the vacuum spouts 46 to the vacuum fan is not necessary.

In contrast to the scrubber vacuum cleaners illustrated in Figures 1-6, the machine according to Figures 7 and 8 does not have any fixed brushes; rather it has two adjustable brushes

AUSTRALIA PATENT OFFICE

located one behind the other that are designed as roller brushes 50a, 50b. The roller brushes 50 are rotary seated each in one downwardly open, U-shaped frame 51a, 51b rotating on axes running transverse to the working direction. At one end the shafts of the roller brushes 50 are each provided with a belt pulley 52. Around each of these belt pulleys 52 there is one toothed belt 53 that is driven by a drive motor 54a, 54b mounted on the upper surface of the frame 51a, 51b.

Each frame 51 is suspended from the chassis transverse to the working direction, where the two supports 55 located at the particular frame 51 are run into guide strips 57 located at the underside of the chassis 56. The lateral displacement of the frame 51 with respect to the chassis 56 is used by two electromotors 58a, 58b located at the underside of the chassis, each of which acts by means of a worm gear on one spur rack 59 located on the particular, inner supports 55.

The cover plate 60 located in the region of the rear roller brush 50b is connected to the frame 51a of the front roller brush 50a. The rear edge of the cover plate 60 is mounted in the guide strip 61 attached securely to the chassis so that said edge can slide to the side. Thus the cover plate 60 can follow the positional changes of the front roller brush 50a that is caused by the corresponding position change drive (electromotor 58a, spur rack 59a, support 55). It will always prevent the rear brush 50b from operating in the region of the floor where cleaning has already taken place by the front brush 50a.

The vacuum strip 63 is open to the bottom and is designed in a U-shape and is also attached securely to the underside of the chassis 56 by means of two retaining irons 62; it is of

AUSTRALIA PATENT OFFICE

extendable telescoping design. For this purpose, in its two ends, there is one vacuum element 64 slide mounted so that the one vacuum element is coupled by means of the strut 65 with the cover plate 60, and the other vacuum element is coupled by means of the strut 66 to the frame 51b of the rear brush. The vacuum hose 68 moves off upward from the vacuum head 67 located centrally in the vacuum strip 63; the vacuum head is connected to the vacuum fan (not illustrated) by means of this vacuum hose. The vacuum elements 64 will assume a position so that the working width of the vacuum device will correspond to the working width of the two brushes. This will occur due to the coupling of the vacuum elements to the position of the brushes by means of struts 65 and 66.

The front edge of the front roller brush 50a is surrounded by a sensor bar 69 that acts on the two sensor switches 70 provided on the front frame 51a. The sensor switches 70 are connected across control lines (not illustrated) with the electromotor 58a, in order to control it in such a manner that the front roller brush will be moved in the direction of its retracted position when the outer sensor switch 70 is operated due to a contact of the sensor bar 69 with an obstacle.

The chassis 56 is set in a known manner onto the two idle rollers 3 and the guide roller 4 pivoting about a vertical axis.

AUSTRALIA PATENT OFFICE

The claims defining the invention are as follows:

1. A machine for the scrubbing of floors with a moving chassis, a floor scrubbing device, in particular grinding, polishing or abrasive device, and with a vacuum feature, where the floor scrubbing device has at least two rotating scrubbing elements, in particular grinding, polishing or abrasive elements, at least one of which is adjustable to vary the operating width of the floor scrubbing device, and where the vacuum device is composed of at least one vacuum head located near the floor in the working direction behind the floor scrubbing device, and connected with the adjustable scrubbing element there is an adjustable vacuum element or an adjustable stripper bar that sends particles located on the floor and/or liquid to the vacuum head or to a vacuum strip connected to it, so that the operating width of the vacuum device will be adapted automatically to the working width of the floor scrubbing device, characterised in that features are provided that prevent a double scrubbing of the floor in regions where the working regions of two scrubbing elements overlap, since one of the two scrubbing elements is brought out of contact with the floor in this region.

2. A floor scrubbing machine according to claim 1, characterised in that behind every adjustable scrubbing element, a vacuum element is provided that is connected to a central vacuum fan.

3. A floor scrubbing machine according to claim 1 or 2, characterised in that the inner end of each stripper bar or of each vacuum element is run in a longitudinal guide.

4. A floor scrubbing machine according to claim 1, 2 or 3, characterised in that the stripper bars and/or the vacuum elements are attached to the adjustable hood covering the scrubbing element.

AUSTRALIA PATENT OFFICE

5. A floor scrubbing machine according to any one of the preceding claims, characterised in that the stripper bars and/or vacuum elements that are connected to the adjustable scrubbing elements, represent telescoping extensions of a central vacuum strip.

6. A floor scrubbing machine according to any one of the preceding claims, characterised in that two adjustable scrubbing elements are provided that are mounted moveably to one side across the working region of a fixed scrubbing element.

7. A floor scrubbing machine according to claim 6, characterised in that the articulation of the two adjustable scrubbing elements is symmetrical with regard to the longitudinal axis of the machine.

8. A floor scrubbing machine according to claim 6 or 7, characterised in that the two adjustable scrubbing elements are echeloned one behind the other in the longitudinal direction of the machine.

9. A floor scrubbing machine according to at / one of the preceding claims, characterised in that at least one of the adjustable scrubbing elements is articulated to the moving chassis by means of a pivot arm that pivots about a vertical axis.

10. A floor scrubbing machine according to any one of the preceding claims, characterised in that a linear guide running transverse to the longitudinal axis of the machine, is provided in which at least one adjustable scrubbing element can shift in a line to the side.

11. A floor scrubbing machine according to any one of the preceding claims, characterised in that at least one adjustable scrubbing element is articulated by means of a parallelogram guide to the housing.

12. A floor scrubbing machine according to any one of the preceding claims, characterised in that each adjustable scrubbing element has its own drive unit.

AUSTRALIA PATENT OFFICE

13. A floor scrubbing machine according to any one of the preceding claims, characterised in that an ejection bar is provided in the working direction in front of each adjustable scrubbing element.

14. A floor scrubbing machine according to any one of the preceding claims, characterised in that each adjustable scrubbing element is brought automatically into an extended position by a spring element

15. A floor scrubbing machine according to any one of the preceding claims, characterised in that one or more hydraulic piston-cylinder unit is provided for changing the position of each adjustable scrubbing element.

16. A floor scrubbing machine according to any one of the preceding claims, characterised in that at least one cover plate is allocated to one scrubbing element near the floor; onto said plate the corresponding scrubbing element is running in that region where the other scrubbing element is in contact with the floor.

17. A floor scrubbing machine according to any one of the preceding claims, characterised in that it has exclusively adjustable scrubbing elements or groups of scrubbing elements, where at least two scrubbing elements or groups of scrubbing elements are positioned one behind the other in the working direction.

18. A floor scrubbing machine according to claim 17, characterised in that roller brushes are provided.

19. A floor scrubbing machine according to claim 17 or 18 having two groups of floor scrubbing elements, characterised in that a single cover plate is provided that is mounted to the chassis and is length adjustable and to which a group of scrubbing elements is mounted in an

AUSTRALIA PATENT OFFICE

operating manner and which is coupled with the other group of scrubbing elements to change their position.

20. A floor scrubbing machine according to any one of the preceding claims, characterised in that in the region of the leading edge, at least of one adjustable scrubbing element, one sensor bar acting on at least one sensor switch is provided that controls the change in position of the corresponding scrubbing element to reduce the working width when the machine moves up to an obstacle.

21. A floor scrubbing machine according to claim 17, 18 or 19, characterised in that two scrubbing elements or groups of scrubbing elements are provided, and that one fixed cover plate is allocated to each scrubbing element or to each group of scrubbing elements; the width of said cover plate corresponds to half the working width of the allocated scrubbing element or of the allocated group of scrubbing elements, where one cover plate covers the region lying to the left of the middle of the machine, and the other cover plate covers the region lying to the right of the middle of the machine.

22. A floor scrubbing machine according to any one of the preceding claims, characterised in that the adjustable vacuum elements and/or stripper bars are connected directly behind the adjustable scrubbing elements.

23. A floor scrubbing machine substantially as hereinbefore described with reference to any one or more of the drawings.

AUSTRALIA PATENT OFFICE

11804/92

1/4

Fig.1

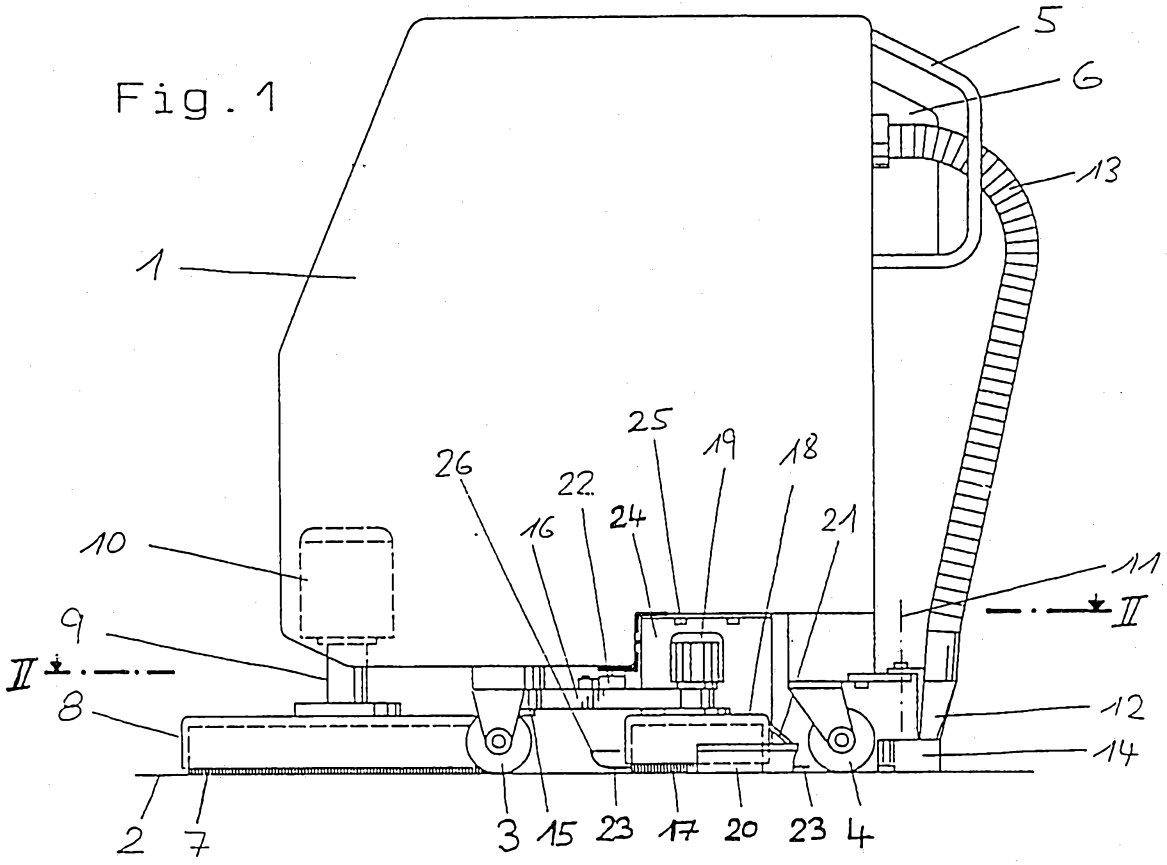

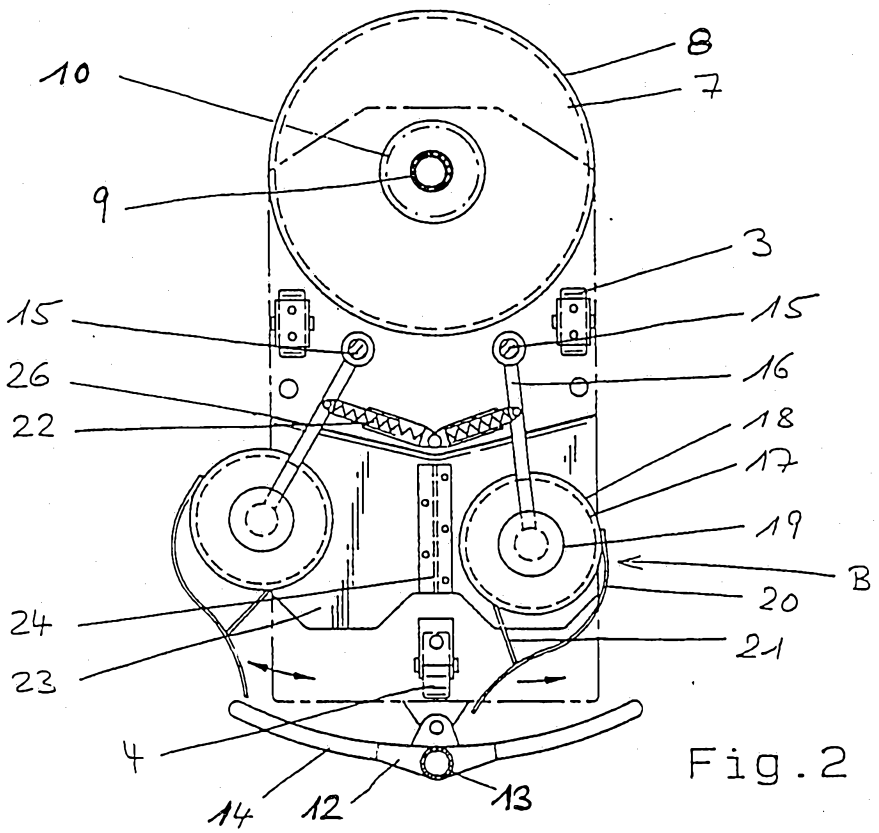

Fig.2

11804/92

2/4

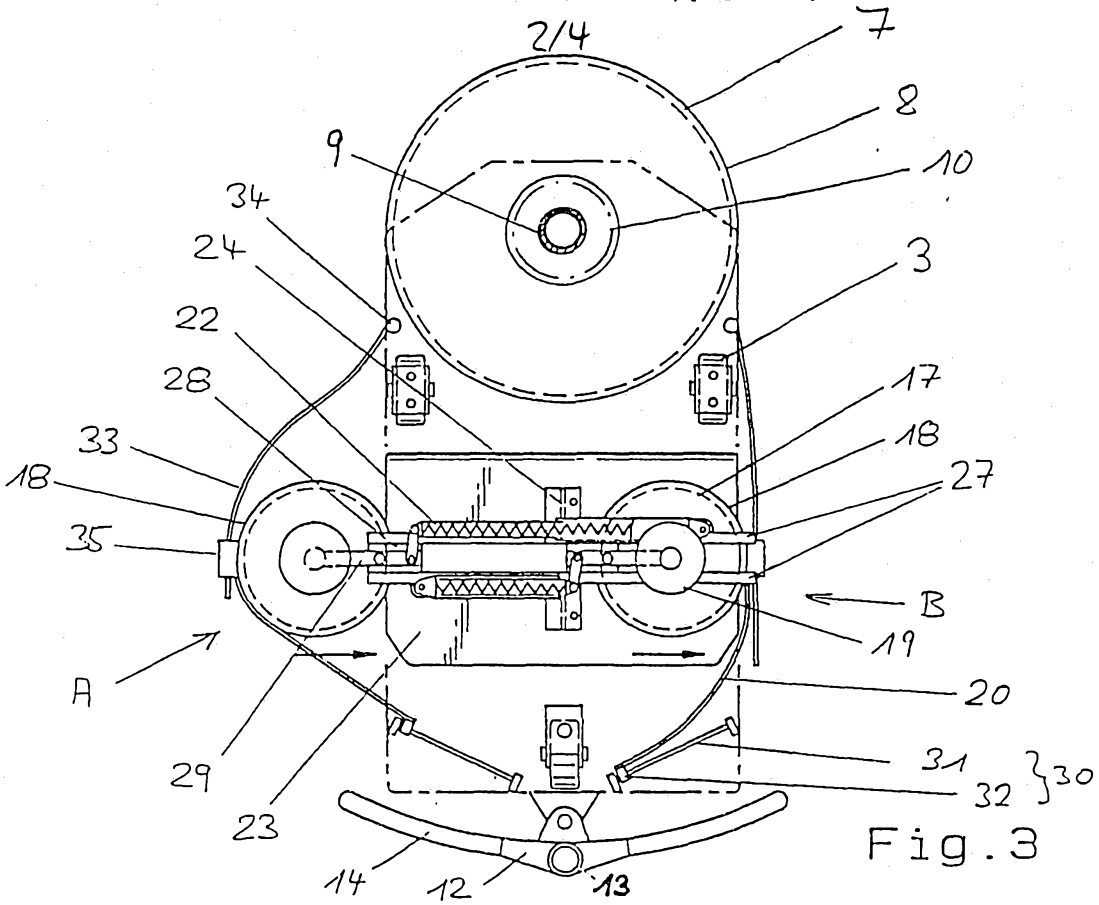

Fig.3

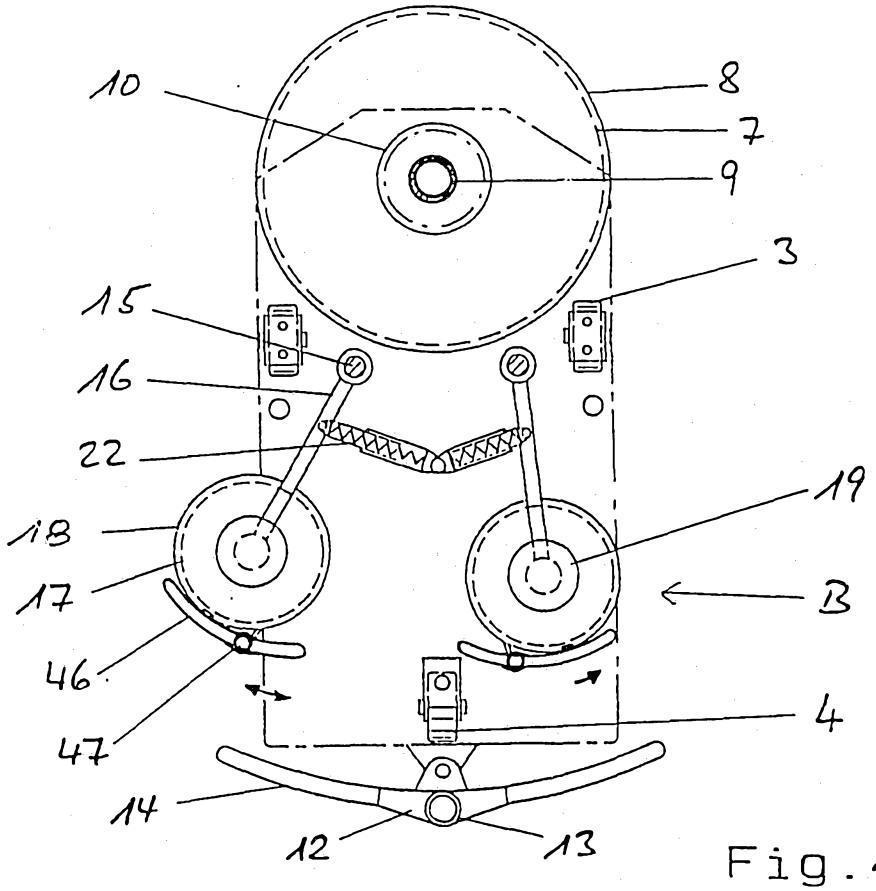

Fig.4

11804/92

3/4

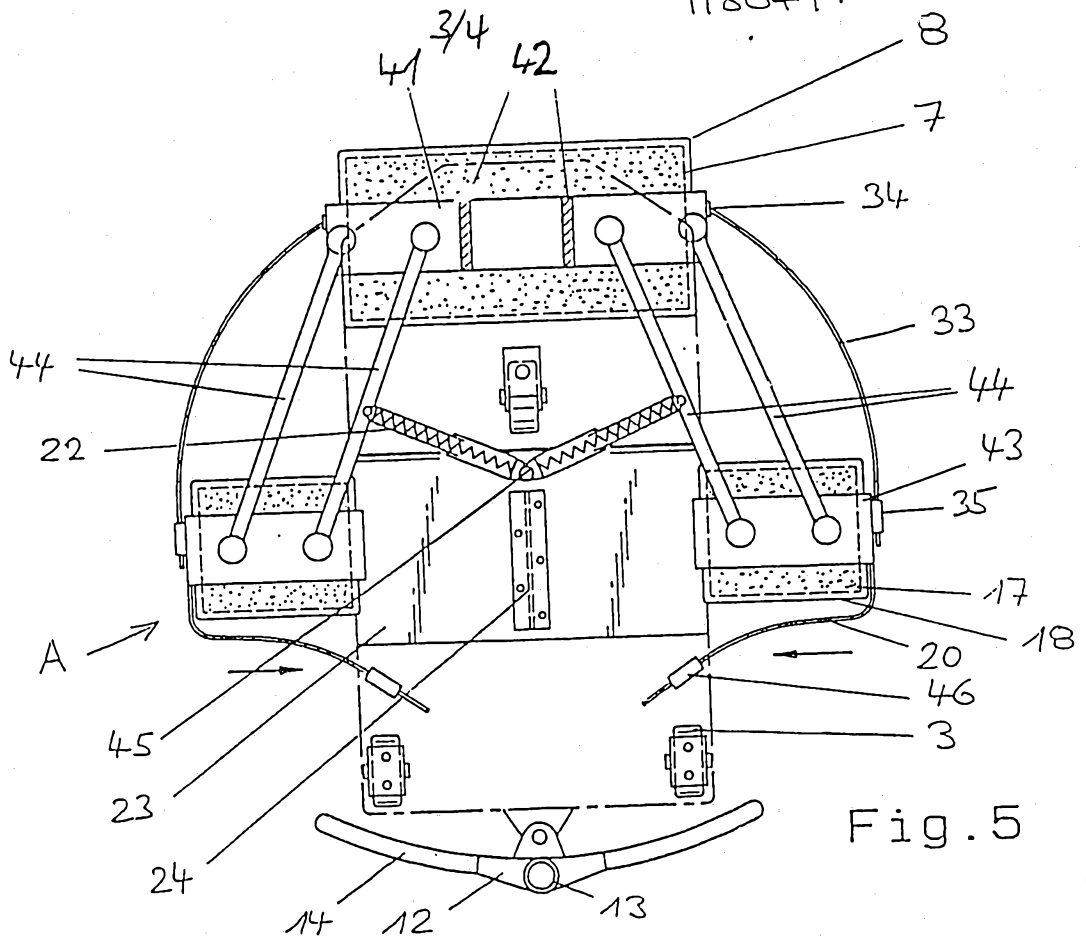

Fig.5

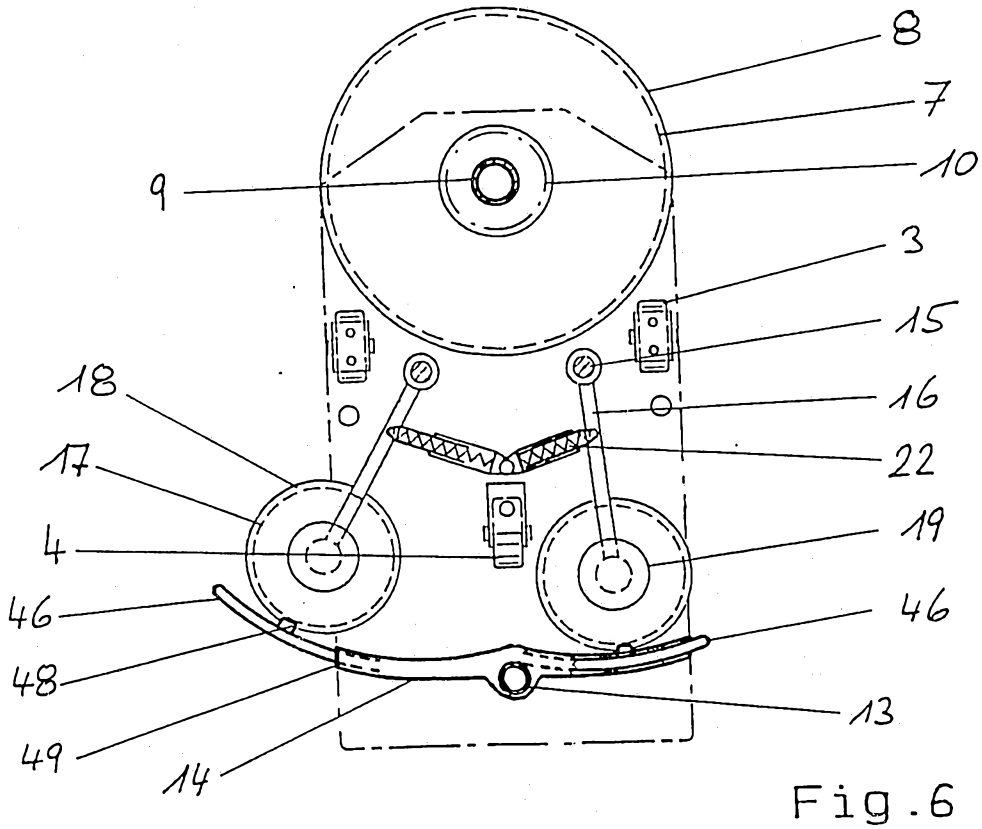

Fig.6

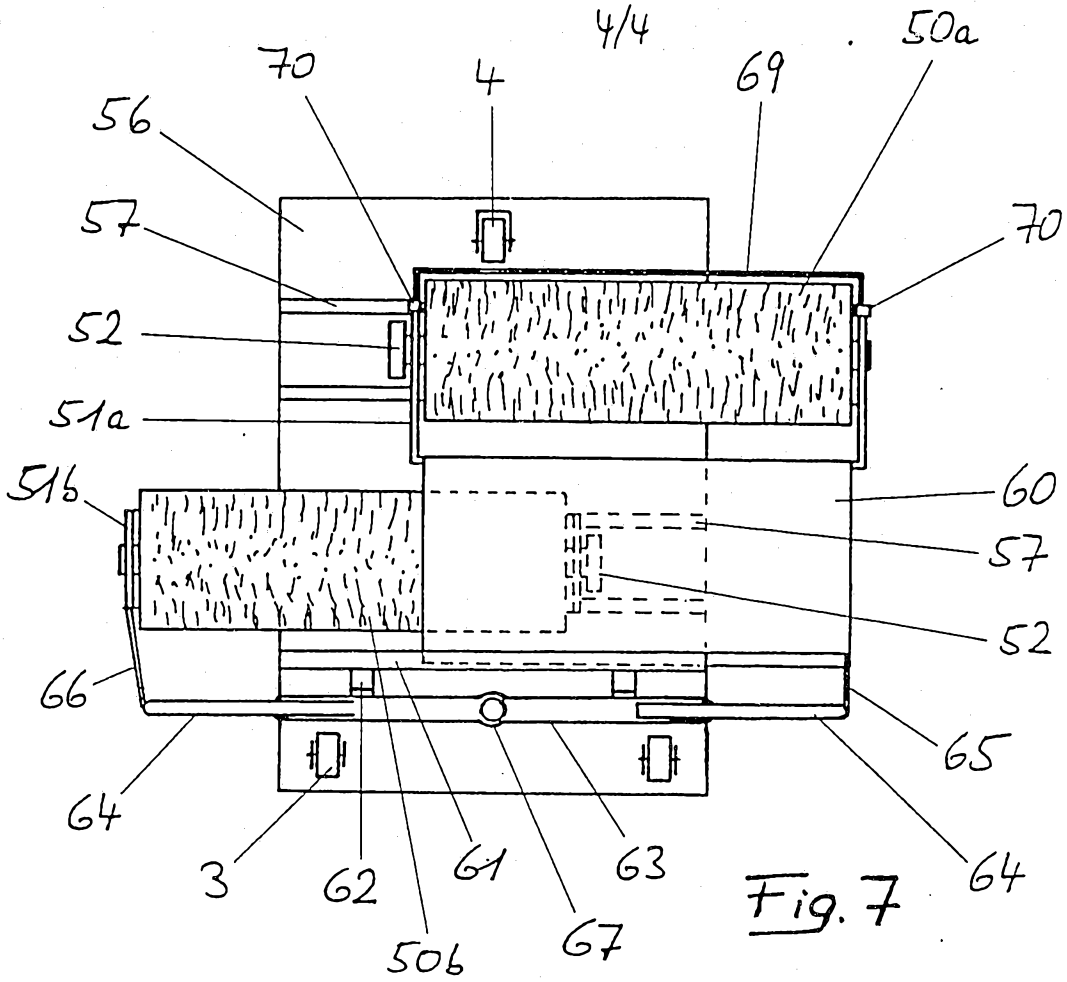
70
4
69
50a
56
57
70
52
51a
51b
60
57
52
66
65
64
3
62
61
63
64
50b
67

Fig. 7

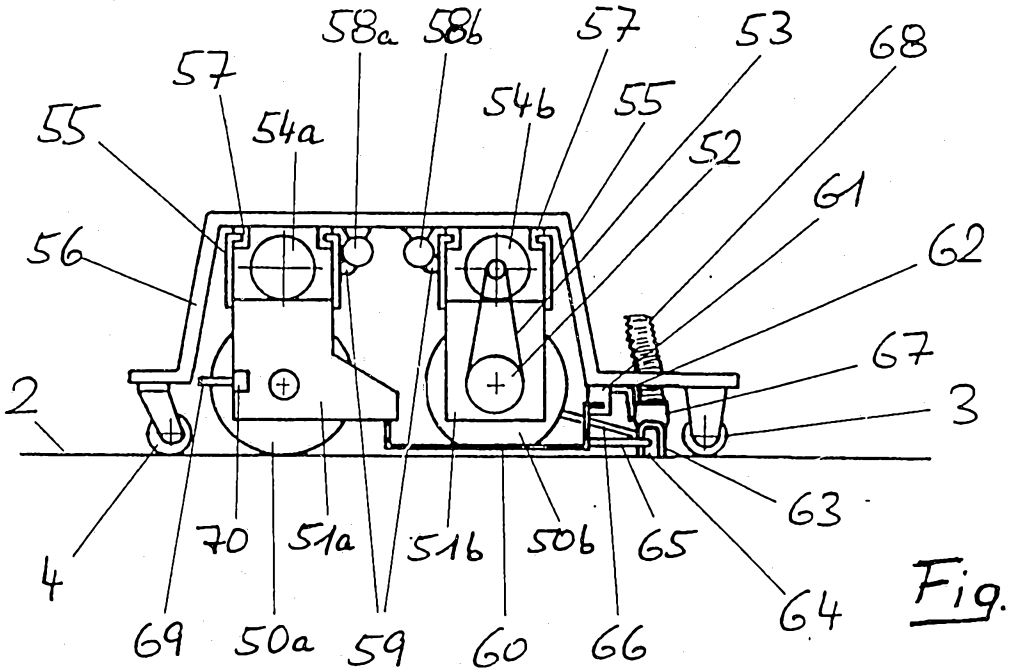
58a
58b
57
53
68
57
54b
55
55
54a
52
61
56
62
67
2
3
63
4
70
51a
51b
50b
65
64
69
50a
59
60
66

Fig. 8

INTERNATIONAL SEARCH REPORT

International Application No PCT/EP 92/00198

I. CLASSIFICATION OF SUBJECT MATTER (if several classification symbols apply, indicate all) [6]

According to International Patent Classification (IPC) or to both National Classification and IPC

Int.Cl.[5]: A 47 L 11/30

II. FIELDS SEARCHED

Minimum Documentation Searched [7]

Classification System	Classification Symbols
Int.Cl.[5]:	A 47 L

Documentation Searched other than Minimum Documentation to the Extent that such Documents are Included in the Fields Searched [8]

III. DOCUMENTS CONSIDERED TO BE RELEVANT [9]

Category *	Citation of Document, [11] with indication, where appropriate, of the relevant passages [12]	Relevant to Claim No. [13]
X	US, A, 3 345 671 (R.D. WILSON) 10 October 1967	1-3,6-8, 10,18
A	see the whole document -.-	13
X	US, A, 3 866 541 (J.M. O.CONNOR) 18 February 1975	1,4,8-10,12, 15,18
A	see the whole document -.-	2,6
P,X	FR, A, 2 657 769 (MIROIR 2000) 9 August 1991 see the whole document -.-	1,6,7,9-12, 16,23
P,X	EP, A, 0 424 229 (PROTEE) 24 April 1991 see the whole document -.-	1,6,7,10,12, 14,19,21
A	GB, A, 1 446 121 (STERLING-WINTHROP GROUP LTD) 18 August 1976 see figures	4

---

* Special categories of cited documents: [10]

"A" document defining the general state of the art which is not considered to be of particular relevance

"E" earlier document but published on or after the international filing date

"L" document which may throw doubts on priority claim(s) or which is cited to establish the publication date of another citation or other special reason (as specified)

"O" document referring to an oral disclosure, use, exhibition or other means

"P" document published prior to the international filing date but later than the priority date claimed

"T" later document published after the international filing date or priority date and not in conflict with the application but cited to understand the principle or theory underlying the invention

"X" document of particular relevance; the claimed invention cannot be considered novel or cannot be considered to involve an inventive step

"Y" document of particular relevance; the claimed invention cannot be considered to involve an inventive step when the document is combined with one or more other such documents, such combination being obvious to a person skilled in the art.

"&" document member of the same patent family

IV. CERTIFICATION

Date of the Actual Completion of the International Search	Date of Mailing of this International Search Report
25 March 1992 (25.03.92)	15 April 1992 (15.04.92)
International Searching Authority	**Signature of Authorized Officer**
European Patent Office	

ANNEX TO THE INTERNATIONAL SEARCH REPORT ON INTERNATIONAL PATENT APPLICATION NO. EP 9200198 SA 55636

This annex lists the patent family members relating to the patent documents cited in the above-mentioned international search report. The members are as contained in the European Patent Office EDP file on
The European Patent Office is in no way liable for these particulars which are merely given for the purpose of information. 25/03/92

Patent document cited in search report	Publication date	Patent family member(s)	Publication date
US-A-3345671		None	
US-A-3866541	18-02-75	None	
FR-A-2657769	09-08-91	None	
EP-A-0424229	24-04-91	FR-A- 2653359	26-04-91
GB-A-1446121	18-08-76	None	

INTERNATIONALER RECHERCHENBERICHT

Internationales Aktenzeichen PCT/EP 92/00198

I. KLASSIFIKATION DES ANMELDUNGSGEGENSTANDS (bei mehreren Klassifikationssymbolen sind alle anzugeben)[6]

Nach der Internationalen Patentklassifikation (IPC) oder nach der nationalen Klassifikation und der IPC

Int.Kl. 5 A47L11/30

II. RECHERCHIERTE SACHGEBIETE

Recherchierter Mindestprüfstoff [7]

Klassifikationssytem	Klassifikationssymbole
Int.Kl. 5	A47L

Recherchierte nicht zum Mindestprüfstoff gehörende Veröffentlichungen, soweit diese unter die recherchierten Sachgebiete fallen [8]

III. EINSCHLAGIGE VEROFFENTLICHUNGEN [9]

Art.°	Kennzeichnung der Veröffentlichung[11], soweit erforderlich unter Angabe der maßgeblichen Teile[12]	Betr. Anspruch Nr.[13]
X	US,A,3 345 671 (R.D. WILSON) 10. Oktober 1967	1-3,6-8, 10,18
A	siehe das ganze Dokument ---	13
X	US,A,3 866 541 (J.M. O'CONNOR) 18. Februar 1975	1,4, 8-10,12, 15,18
A	siehe das ganze Dokument ---	2,6
P,X	FR,A,2 657 769 (MIROIR 2000) 9. August 1991	1,6,7, 9-12,16, 23
	siehe das ganze Dokument ---	
	-/—	

° Besondere Kategorien von angegebenen Veröffentlichungen [10] :

"A" Veröffentlichung, die den allgemeinen Stand der Technik definiert, aber nicht als besonders bedeutsam anzusehen ist

"E" älteres Dokument, das jedoch erst am oder nach dem internationalen Anmeldedatum veröffentlicht worden ist

"L" Veröffentlichung, die geeignet ist, einen Prioritätsanspruch zweifelhaft erscheinen zu lassen, oder durch die das Veröffentlichungsdatum einer anderen im Recherchenbericht genannten Veröffentlichung belegt werden soll oder die aus einem anderen besonderen Grund angegeben ist (wie ausgeführt)

"O" Veröffentlichung, die sich auf eine mündliche Offenbarung, eine Benutzung, eine Ausstellung oder andere Maßnahmen bezieht

"P" Veröffentlichung, die vor dem internationalen Anmeldedatum, aber nach dem beanspruchten Prioritätsdatum veröffentlicht worden ist

"T" Spätere Veröffentlichung, die nach dem internationalen Anmeldedatum oder dem Prioritätsdatum veröffentlicht worden ist und mit der Anmeldung nicht kollidiert, sondern nur zum Verständnis des der Erfindung zugrundeliegenden Prinzips oder der ihr zugrundeliegenden Theorie angegeben ist

"X" Veröffentlichung von besonderer Bedeutung; die beanspruchte Erfindung kann nicht als neu oder auf erfinderischer Tätigkeit beruhend betrachtet werden

"Y" Veröffentlichung von besonderer Bedeutung; die beanspruchte Erfindung kann nicht als auf erfinderischer Tätigkeit beruhend betrachtet werden, wenn die Veröffentlichung mit einer oder mehreren anderen Veröffentlichungen dieser Kategorie in Verbindung gebracht wird und diese Verbindung für einen Fachmann naheliegend ist

"&" Veröffentlichung, die Mitglied derselben Patentfamilie ist

IV. BESCHEINIGUNG

Datum des Abschlusses der internationalen Recherche	Absendedatum des internationalen Recherchenberichts
25.MAERZ 1992	15. 04. 92
Internationale Recherchenbehörde	**Unterschrift des bevollmächtigten Bediensteten**
EUROPAISCHES PATENTAMT	M. VANMOL

III. EINSCHLAGIGE VEROFFENTLICHUNGEN (Fortsetzung von Blatt 2)

Art °	Kennzeichnung der Veröffentlichung, soweit erforderlich unter Angabe der maßgeblichen Teile	Betr. Anspruch Nr.
P,X	EP,A,0 424 229 (PROTEE) 24. April 1991 siehe das ganze Dokument ---	1,6,7, 10,12, 14,19,21
A	GB,A,1 446 121 (STERLING-WINTHROP GROUP LTD) 18. August 1976 siehe Abbildungen ---	4

ANHANG ZUM INTERNATIONALEN RECHERCHENBERICHT ÜBER DIE INTERNATIONALE PATENTANMELDUNG NR.

EP 9200198
SA 55636

In diesem Anhang sind die Mitglieder der Patentfamilien der im obengenannten internationalen Recherchenbericht angeführten Patentdokumente angegeben.
Die Angaben über die Familienmitglieder entsprechen dem Stand der Datei des Europäischen Patentamts am 25/03/92
Diese Angaben dienen nur zur Unterrichtung und erfolgen ohne Gewähr.

Im Recherchenbericht angeführtes Patentdokument	Datum der Veröffentlichung	Mitglied(er) der Patentfamilie	Datum der Veröffentlichung
US-A-3345671		Keine	
US-A-3866541	18-02-75	Keine	
FR-A-2657769	09-08-91	Keine	
EP-A-0424229	24-04-91	FR-A- 2653359	26-04-91
GB-A-1446121	18-08-76	Keine	

EPO FORM P0473

Abstract

A floor scrubbing machine has a floor scrubbing device with at least two floor scrubbing elements, of which at least one is mounted to be adjustable in such a manner that the operating width of the floor scrubbing device can be changed. An adjustable vacuum element or an adjustable stripper bar can be connected to the floor scrubbing element with at least one adjustable floor scrubbing element, said stripper bar follows the movements of the adjustable scrubbing element. The adjustable vacuum element and/or the adjustable stripper bar is allocated to a vacuum device whose working width will be adapted in this manner automatically to the working width of the floor scrubbing device.

(Figure 2).