No. 873,249. PATENTED DEC. 10, 1907.

E. P. LANG & C. J. KALBE.

STOOL.

APPLICATION FILED MAR. 15, 1907.

2 SHEETS—SHEET 1.

Fig. 1.

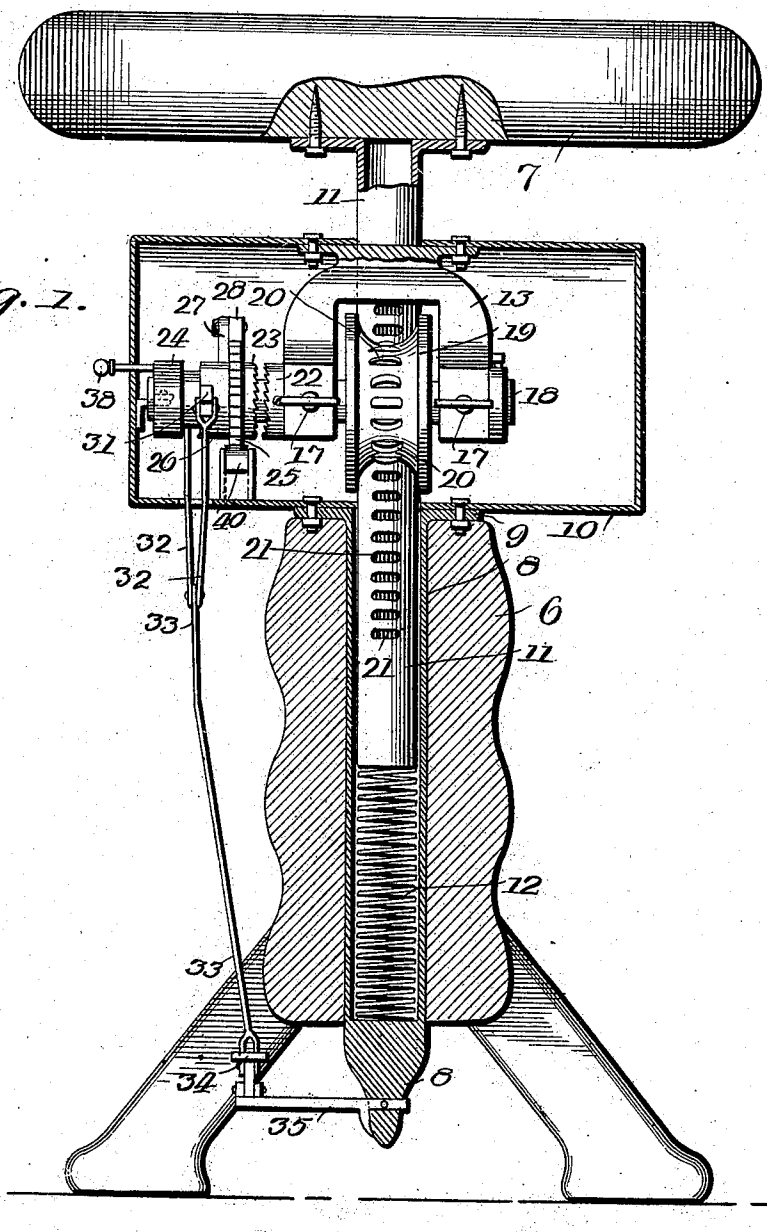

Fig. 4

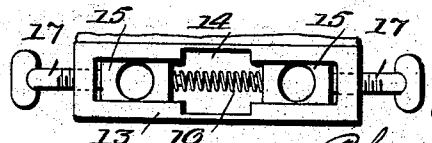

Witnesses

F. C. Barry

Geo. E. Tew.

Inventors

Edward P. Lang

Charles J. Kalbe!

By Miller B. Stevens

Attorneys

THE NORRIS PETERS CO., WASHINGTON, D. C.

No. 873,249. PATENTED DEC. 10, 1907.

E. P. LANG & C. J. KALBE.

STOOL.

APPLICATION FILED MAR. 15, 1907.

2 SHEETS—SHEET 2.

Fig. 2.

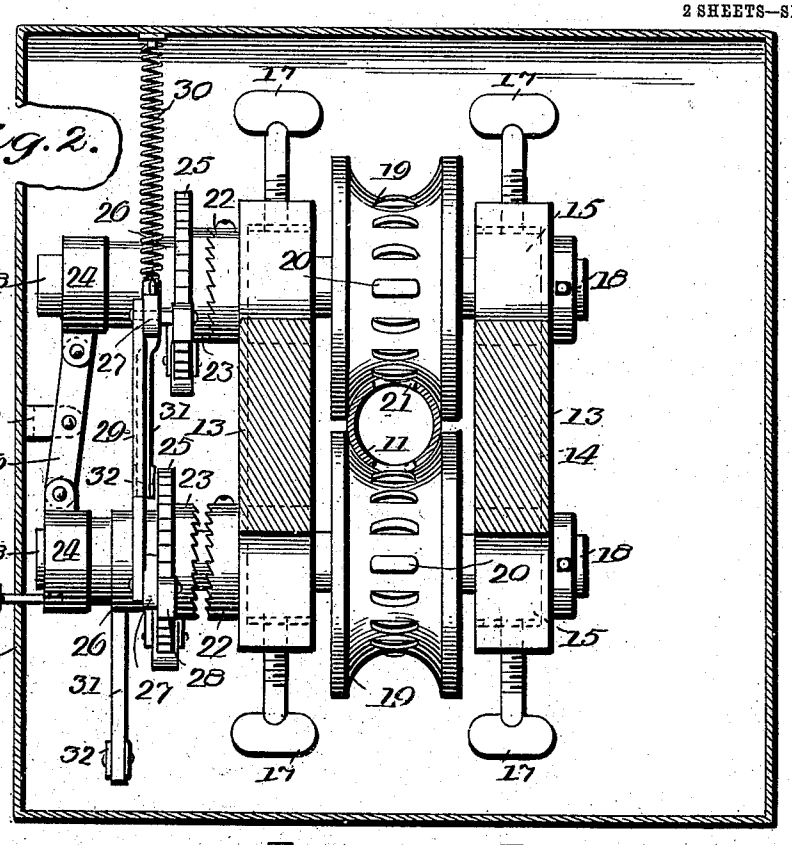

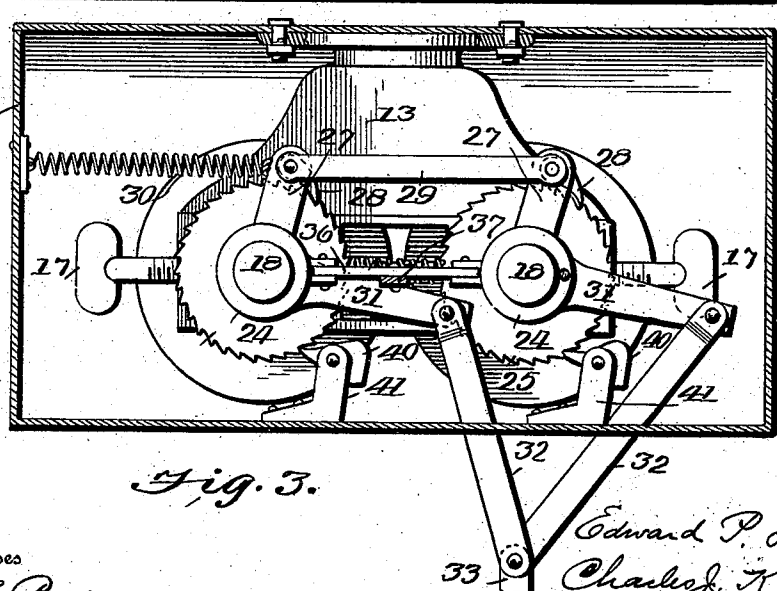

Fig. 3.

Inventors

Edward P. Lang

Charles J. Kalbe

By Milo B. Stevenson

Attorneys

Witnesses

F. C. Barry

Geo. E. Tew

THE NORRIS PETERS CO., WASHINGTON, D. C.

UNITED STATES PATENT OFFICE.

EDWARD P. LANG AND CHARLES J. KALBE, OF CHICAGO, ILLINOIS.

STOOL.

No. 873,249. Specification of Letters Patent. Patented Dec. 10, 1907.

Application filed March 15, 1907. Serial No. 362,488.

To all whom it may concern:

Be it known that we, EDWARD P. LANG and CHARLES J. KALBE, citizens of the United States, residing at Chicago, in the county of Cook and State of Illinois, have invented certain new and useful Improvements in Stools, of which the following is a specification.

This invention relates to stools in which the seat is adjustable up and down, and has for its object to provide improved means by which the seat can be raised or lowered by the person sitting on it, without rotation or turning of the seat.

The invention is particularly applicable to piano stools but may be applied to other uses or other kinds of seats.

The invention is illustrated in the accompanying drawings, in which

Figure 1 is a sectional elevation illustrating the invention. Fig. 2 is a sectional plan showing the operating mechanism. Fig. 3 is an end view of the parts shown in Fig. 2. Fig. 4 is a detail of the devices for adjusting the journal boxes of the rollers, which support the seat standard.

Referring specifically to the drawings, 6 indicates the pedestal of the stool and 7 the seat. The pedestal is hollow and provided with an upright tube 8 at the center thereof, this tube being closed at the lower end. At the upper end the tube is flanged as at 9 and bolted to a casing 10 which casing incloses the operating parts. The seat is mounted upon a cylindrical or tubular standard 11 which extends through the casing and into the tube 8. A coiled spring 12, located between the end of the standard and the bottom of the tube 8 assists in supporting the weight and lifting the seat.

Located within the casing 10, and bolted to the top thereof, is a hanger casting 13 which has two legs or branches disposed on opposite sides of the standard 11, which standard works through an opening in the head of the casting. Each leg of the casting has therein a horizontal cross guide or recess 14 in the opposite ends of which are fitted bearing blocks 15 between which is a coiled spring 16. Screws 17, tapped through the casting, bear against the outer ends of the bearing boxes. By means of the screws and springs the bearing boxes may be adjusted toward or from each other. The bearing boxes in the respective legs receive the shafts 18 of a pair of grooved cog wheels 19 between which the standard 11 is located, and the cogs 20 on the wheels engage corresponding notches 21 in the opposite sides of the standard. By means of the screws 17 the wheels are held in close contact against the sides of the standard.

The shaft of each cog wheel carries a fixed clutch member 22 and a loose clutch member 23 formed at the end of a sleeve 24 which can be turned on the shaft, and also slid lengthwise to engage or disengage the clutch. Each sleeve also has fixed thereon, or forming a part thereof, a ratchet 25, and adjacent to the ratchet it has thereon a loose collar 26 provided with an arm 27 which carries a pawl 28 adapted to engage the ratchet. The arms 27 are connected by a link 29, so that the pawls of the respective ratchets move together. A spring 30 serves to retract the pawl. Each collar 26 also has an arm 31 which arms are both connected by links 32 to a rod 33 which extends down beside the pedestal of the stool and is connected to a foot lever or treadle 34 pivoted to a bracket 35 projecting from a fixture at the lower end of the central tube 8. The treadle is in convenient position for operation by the foot. The ratchets are also engaged by pawls 40 pivoted to brackets 41 secured to the bottom of the casing, said pawls serving to prevent back slip.

The clutch sleeves 24 are connected across by a lever 36 pivoted to a bracket 37 on the end of the casing, and one sleeve has a knob 38 extending through the end of the casing. By manipulation of the knob either clutch may be thrown to engagement. By means of the lever 36, when one is engaged the other is disengaged. When it is desired to raise or lower the seat the appropriate clutch is first engaged. Then by working the treadle 34 the ratchets are turned, and the cog wheel 19 of the clutched side is turned, and by its engagement with the standard the seat is raised or lowered as the case may be. It will be seen that when one clutch is engaged the wheel is turned in a direction to raise the seat, and when the other clutch is engaged the wheel is turned in a direction to lower the same. Therefore by manipulation of the clutch shifting knob 38, and the treadle, the seat may be raised or lowered by a person sitting upon it.

I claim:

1. The combination of a pedestal, a seat standard movable up and down therein, a

pair of gear wheels supported on the pedestal and engaging the standard, and means to turn either wheel, to raise or lower the standard including a treadle and pawl and ratchet connections between the treadle and each wheel.

2. The combination of a pedestal, a seat standard movable up and down therein, a pair of gear wheels supported on the pedestal and engaging opposite sides of the standard, a clutch for each wheel, and means to turn either wheel, to raise or lower the standard, according to the engagement of either clutch including a treadle pivoted on the pedestal, and pawl and ratchet connections between the treadle and each clutch.

3. Means to raise or lower a seat standard, comprising, in combination, a pair of gear wheels acting oppositely on the standard, a clutch and ratchet connected to each wheel, to turn the same, an operating lever, a pawl for each ratchet, connected to said lever, and means to engage one clutch and disengage the other, to turn either wheel.

4. Means to raise or lower a seat standard, comprising, in combination, a pair of gear wheels acting oppositely on the standard, a clutch for each wheel, one member of which is fast on the wheel shaft and the other of which is a sleeve loose thereon, a ratchet on the sleeve, a pawl for each ratchet, means to simultaneously operate both pawls, and means to shift the sleeves to engage one clutch and disengage the other.

In testimony whereof we affix our signatures in presence of two witnesses.

EDWARD P. LANG.
CHARLES J. KALBE.

Witnesses:
NELLIE FELTSKOG,
H. G. BATCHELOR.