B. BROOKS.

MOTOR CYCLE, CYCLE, AND ANALOGOUS SADDLES AND SEATS.

APPLICATION FILED APR. 6, 1914.

1,112,354.

Patented Sept. 29, 1914.

2 SHEETS—SHEET 1.

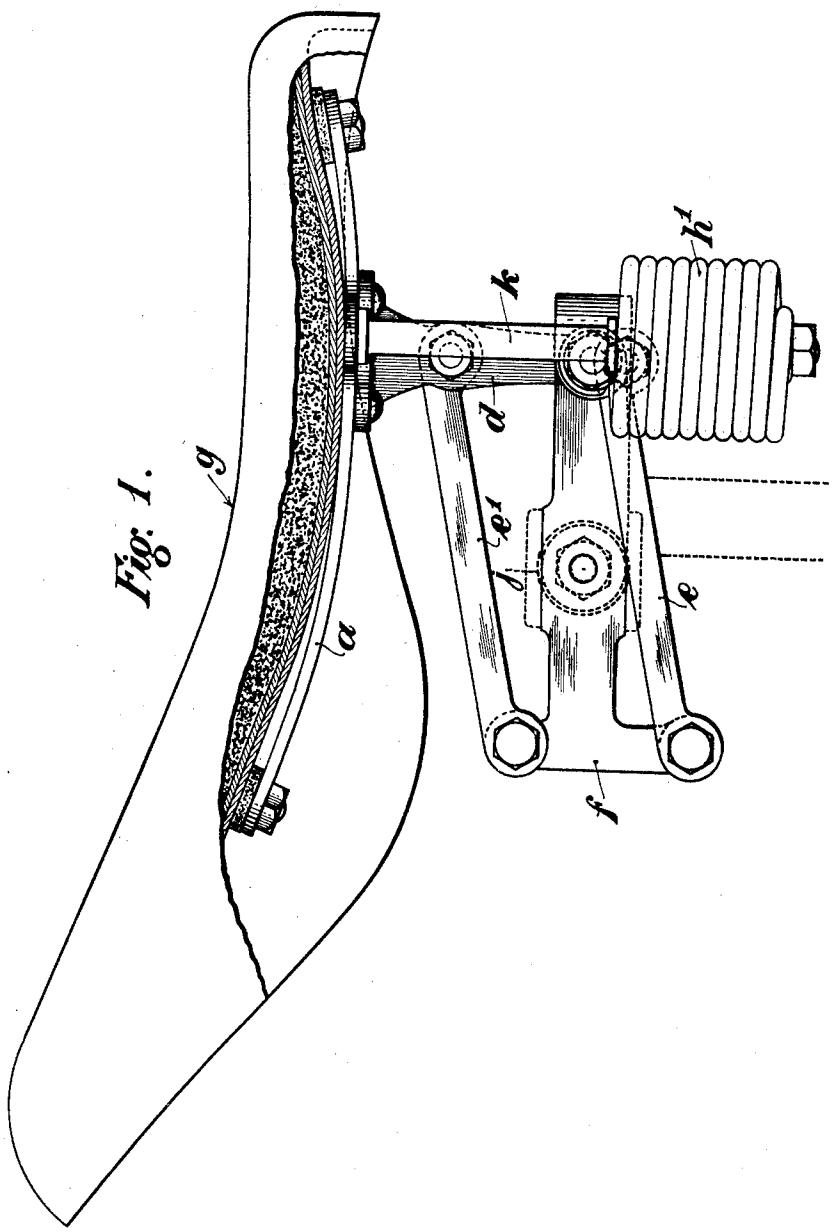

Fig. 1.

WITNESSES

M. E. McDade.

INVENTOR Boulttbee Brooks

by James L. Norris Attorney.

THE NORRIS PETERS CO., PHOTO-LITHO., WASHINGTON, D. C.

B. BROOKS.

MOTOR CYCLE, CYCLE, AND ANALOGOUS SADDLES AND SEATS.

APPLICATION FILED APR. 6, 1914.

1,112,354.

Patented Sept. 29, 1914.

2 SHEETS—SHEET 2.

Fig. 2.

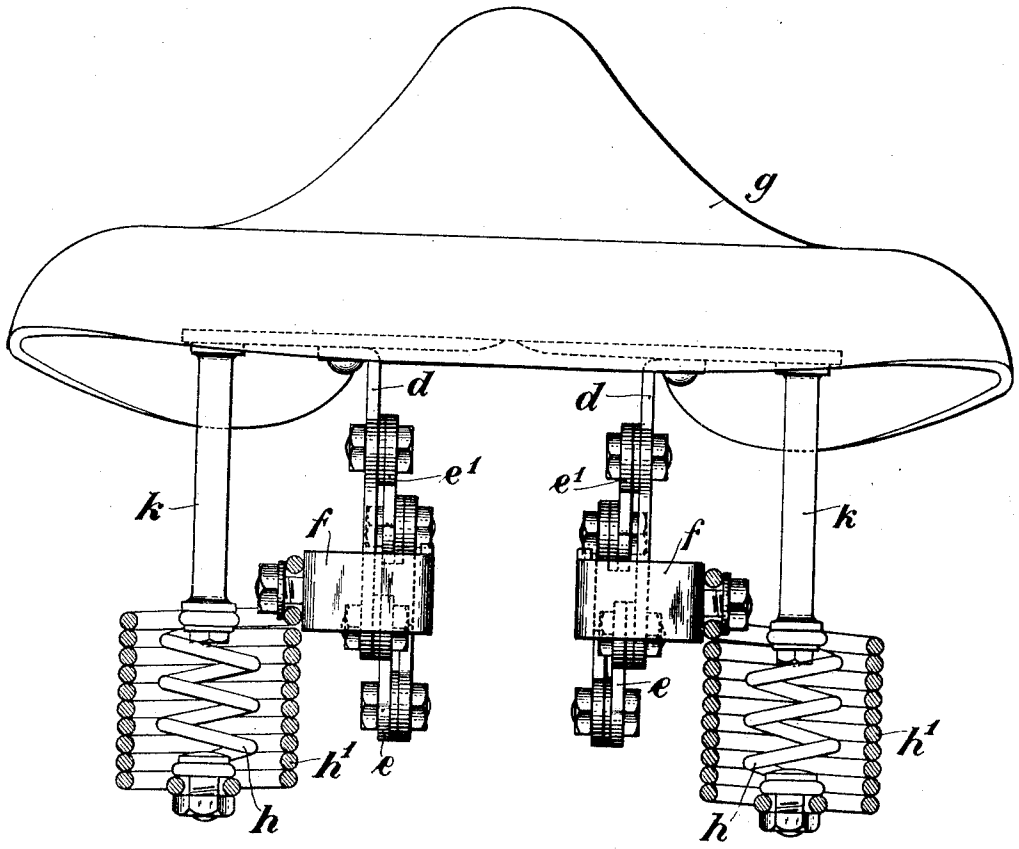

WITNESSES

W. E. McDade

INVENTOR Boulttee Brooks

James L. Norris
Attorney

THE NORRIS PETERS CO., PHOTO-LITHO., WASHINGTON, D. C.

UNITED STATES PATENT OFFICE.

BOULTBEE BROOKS, OF BIRMINGHAM, ENGLAND.

MOTOR-CYCLE, CYCLE, AND ANALOGOUS SADDLES AND SEATS.

1,112,354. Specification of Letters Patent. **Patented Sept. 29, 1914.**

Original application filed July 20, 1912, Serial No. 710,690. Divided and this application filed April 6, 1914. Serial No. 829,960.

To all whom it may concern:

Be it known that I, BOULTBEE BROOKS, subject of the King of Great Britain, residing at Birmingham, England, have invented certain new and useful Improvements in Motor-Cycle, Cycle, and Analogous Saddles and Seats, of which the following is a specification.

This invention relates to motor-cycle, cycle, and analogous saddles and seats of that type in which the seat proper is controlled in its movement in relation to the base frame, and is constrained to move bodily in a vertical direction, by a system of parellel-motion links jointed at one end to the said base frame and at their other ends to hangers depending from the seat frame, or certain of them jointed to hangers and others to the seat frame.

A saddle or seat of this type is shown and described in my prior application, Serial Number 710,690, filed July 20, 1912, of which the present case is a division.

The object of the present invention is to bring the spring system immediately under its load so as to obtain the greatest possible advantage from the springs, and consequently greater comfort and resiliency, all vibration and shock due to inequalities in the road being effectively absorbed or neutralized.

Figure 1 of the accompanying drawings represents a sectional elevation of a motor-cycle saddle constructed in accordance with the present invention. Fig. 2 is an end view with the springs in section.

The seat frame comprises a shaped metal plate *a* to which are riveted at some distance forward of the rear end, a pair of depending hangers or brackets *d*, arranged directly under the load (for the normal position of the rider). To give the vertical rising and falling action to the seat a pair of superposed parallel motion links *e*, e^1, is employed at each side of the saddle. At their forward ends they are jointed to a rigid base bracket or frame *f*, while at their rear ends they are jointed to the hangers *d*. To resiliently support the seat *g*, thrust rods *k* depend from the seat plate *a* in substantially the same transverse plane as the hangers *d*, and their lower ends are attached to the upper ends of the inner coiled compression springs *h* of a compound tension and compression system, the lower end of the inner spring being attached to the lower coil of an outer concentric extension spring h^1 which is suspended by its upper end from the rear extremity of the base frame *f*. The latter consists of a pair of sheet steel side plates tied together by the boss or attachment clip *j*. No special provision is made for supporting the peak of the saddle, the whole seat being supported through the medium of the springs *h*, h^1.

Having fully described my invention, what I desire to claim and secure by Letters Patent is:—

1. In motor-cycle, cycle and analogous saddles and seats, a base frame, a seat frame, hanger brackets depending from the seat frame, parallel-motion links connected with the hanger brackets and the base frame, coiled springs for supporting the seat connected with the base frame and having their axes located directly under the load, and depending thrust rods carried by the seat frame and connected to the springs.

2. In a motor-cycle, cycle and analogous saddles and seats, a base frame, a seat frame, hanger brackets depending from the seat frame, parallel-motion links connected with the hanger brackets and the base frame, compound springs comprising compression and extension spring elements, connected together at their lower ends and of which the said exterior spring elements are suspended from the base frame, and thrust rods depending from the seat frame and connected with the compression spring elements.

In testimony whereof I have hereunto set my hand in presence of two subscribing witnesses.

BOULTBEE BROOKS.

Witnesses:
HENRY MORTON SKERRETT,
WILLIAM STAIBES SKERRETT.

Copies of this patent may be obtained for five cents each, by addressing the "Commissioner of Patents, Washington, D. C."