July 5, 1932. C. M. F. FRIDEN 1,865,751

CALCULATING MACHINE

Filed May 5, 1928

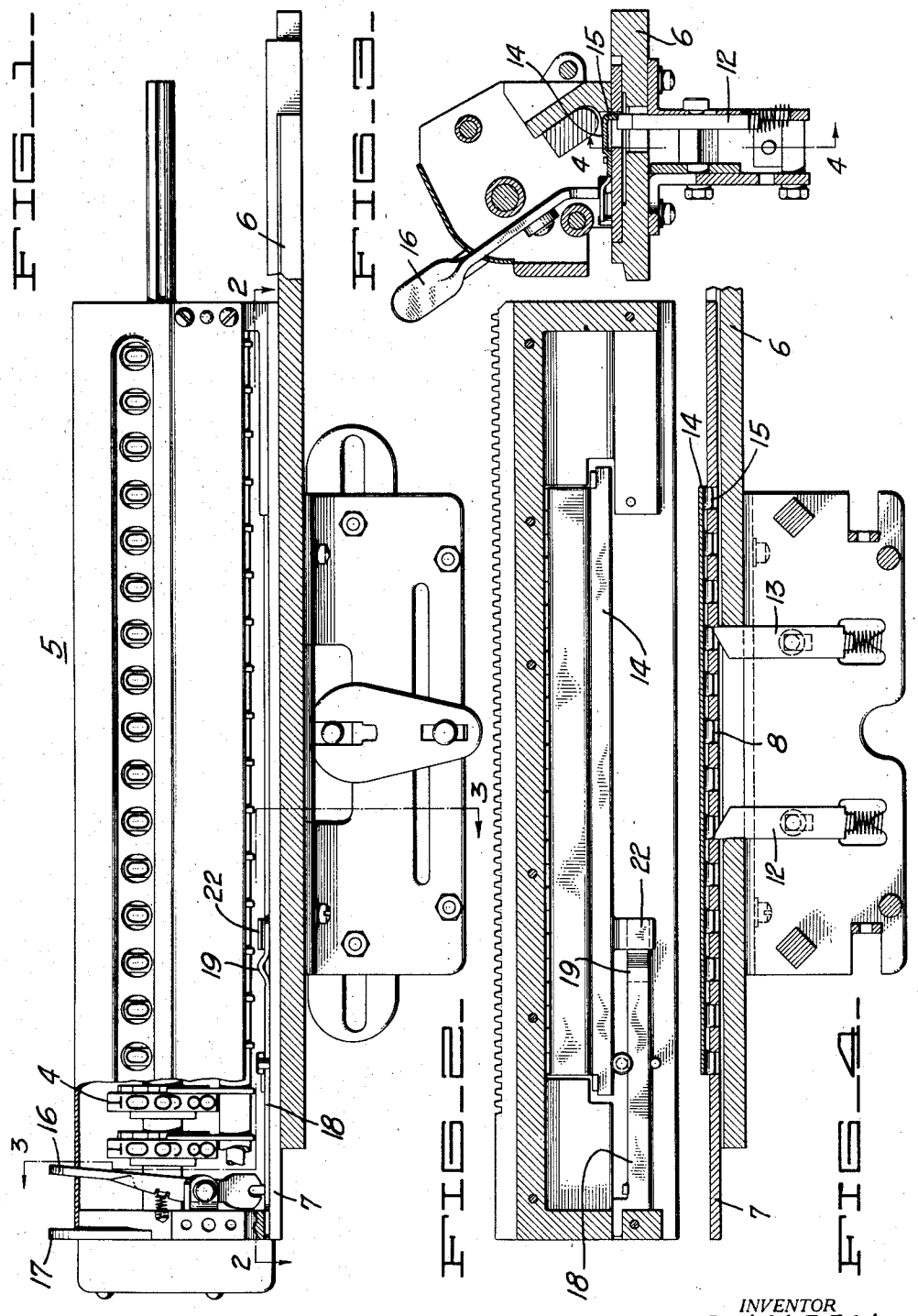

INVENTOR
Carl M. F. Friden
BY White, Prost & Fryer
ATTORNEYS

Patented July 5, 1932

1,865,751

UNITED STATES PATENT OFFICE

CARL M. F. FRIDEN, OF OAKLAND, CALIFORNIA, ASSIGNOR TO MARCHANT CALCULATING MACHINE COMPANY, OF EMERYVILLE, CALIFORNIA, A CORPORATION OF CALIFORNIA

CALCULATING MACHINE

Application filed May 5, 1928. Serial No. 275,309.

The invention relates to calculating machines in which the numeral wheels of the product register are mounted on a carriage which, for the purpose of making direct action of the selected values on the numeral wheels of highest value possible, is disposed in parallel displaceable relation to the axis of the actuator. The carriage is usually displaceable transversely in a step by step movement and is positively held in any selected, set position. One means for moving the carriage and holding it in selected position is disclosed in my copending application, Serial Number 539,422, filed February 27, 1922, to which reference is hereby made for a complete disclosure of the carriage moving means. This disclosure shows means for positively holding the carriage against movement in either direction. Means have been provided for disabling the holding means to permit free movement of the carriage by hand. The means for operating the disabling means has heretofore been arranged on the frame of the machine, on which the carriage is mounted, so that the operator was required to use two hands, one to disable the holding means and the other to move the carriage.

An object of the present invention is to incorporate the disabling means and the operating means therefor, in the carriage, so that the operator may, with one operation of one hand, operate the disabling means and move the carriage.

The invention possesses other advantageous features, some of which with the foregoing will be set forth at length in the following description, where I shall outline in full that form of my invention which I have selected for illustration in the drawing accompanying and forming part of the present specification. In said drawing, I have shown one form of the mechanism embodying my invention, but it is to be understood that I do not limit myself to such form, since the invention, as set forth in the claims, may be embodied in a plurality of forms.

Referring to said drawing:

Figure 1 is a vertical section taken through a calculating machine in front of the transversely movable carriage, the casing of the carriage being partly broken away to disclose the numeral wheels of the product register.

Figure 2 is a horizontal section through the base of the carriage taken on the line 2—2 Figure 1.

Figure 3 is a vertical section through the carriage and the carriage shifting mechanism, taken on the line 3—3 Figure 1.

Figure 4 is a vertical section through the carriage shifting mechanism taken on the line 4—4 Figure 3.

The numeral wheels 4 of the product register are mounted in a carriage 5 which is displaceable transversely, ordinarily in a step by step movement, on the frame of the calculating machine. The frame is provided with a transverse guideway 6 on which the base plate 7 of the carriage slides. The base plate is provided with a series of recesses 8, having the same spacing as the numeral wheels 4 and these recesses are engaged by suitable means for giving the carriage a step by step movement in either direction, as set forth in my prior application, above referred to. Means are also provided comprising the spring pressed dogs 12 and 13 which engage in the recesses to positively hold the carriage in any selected set position. The means for giving the carriage a step by step movement, also embodies means for withdrawing the dog which prevents movement in the selected direction.

It is frequently desirable to shift the carriage freely in either direction over a series of steps, instead of using the step by step shifting mechanism and means are provided for disabling the holding dogs 12 and 13, to permit free movement of the carriage. In the present instance, these means are mounted on the carriage so that the operator with one movement of his hand, disables the holding means and shifts the carriage.

Mounted on the base plate 7 of the carriage is a rocking plate 14 having on its rear edge, a plurality of downwardly extending teeth 15 which lie in the plane of the holding dogs 12 and 13 and which extend part way into the recesses 8. Means are provided for rocking the plate 14 to move the teeth 15 further into

the recesses to bring the lower edges of the teeth into the plane of the lower face of the base plate 7, thereby ejecting the holding dogs 12 and 13 from the recesses and presenting a substantially smooth surface on the lower face of the base plate 7, in contact with the upper edges of the holding dogs, so that the carriage may be freely moved in either direction.

The plate 14 is rocked by the lever 16 which is disposed adjacent the finger grip 17 on the carriage so that both the finger grip and the lever are caught between the thumb and forefinger of the operator when he desires to freely shift the carriage. The pressure on the lever 16, rocks the lever to cause rocking of the toothed plate 14 which causes the ejection of the holding dogs 12 and 13. Connected to the lower end of the lever 16 is a slide 18 which extends under a lip 22 on the forward edge of the rocking plate 14. The slide 18 is provided, adjacent the lip 22, with a raised portion 19, which, when the slide is moved by manual pressure on the lever 16, slides under the lip 22 and rocks the plate 14 to move the teeth 15 into the recesses on the base plate and thereby displace the holding dogs 12 and 13. By arranging the operating means for the disabling means of the holding dogs, on the carriage and positioning it adjacent the finger grip 17, the operator may with one operation of one hand, operate the disabling means and shift the carriage to any desired position. On the release of the lever 16, the plate 14 rocks back to normal position and the dogs 12 and 13 engage in the recesses when the carriage is properly positioned, and hold the carriage against movement.

I claim:

1. In a calculating machine, a transversely movable carriage provided with a series of recesses, means engaging the recesses for holding the carriage against transverse movement in either direction, a member carried by the carriage provided with teeth registering with said recesses and means for moving said member to cause the teeth to eject the holding means from the recesses.

2. In a calculating machine, a transversely movable carriage provided with a series of recesses, a plurality of means engaging the recesses for holding the carriage against transverse movement in both directions, a member carried by the carriage for ejecting the holding means from the recesses, and means on the carriage for operating said ejecting member.

3. In a calculating machine, a transversely movable carriage provided with a series of recesses, means engaging the recesses for holding the carriage against transverse movement in either direction, a rocking plate mounted on the carriage, teeth on said plate extending into said recesses and means on the carriage for rocking the plate to move the edges of the teeth into alinement with the surface in which the recesses are formed thereby ejecting the holding means from the recesses and permitting free transverse movement of the carriage.

4. In a calculating machine, a transversely movable carriage provided with a series of recesses, means engaging the recesses for holding the carriage against transverse movement, a rocking plate mounted on the carriage, teeth on said plate extending into said recesses, and a lever on the carriage for rocking said plate to move the edges of the teeth into alinement with the surface in which the recesses are formed.

5. In a calculating machine, a transversely movable carriage provided with a series of recesses, spring pressed means engaging the recesses to hold the carriage against transverse movement and a toothed plate mounted on the carriage in the plane of the holding means and adapted to be moved to move the teeth into the recesses to bring the edges of the teeth into the surface in which the recesses are formed.

6. In a calculating machine, a carriage having a base provided with a series of recesses, dogs engaging the recesses to hold the carriage against transverse movement in either direction, a rocking plate mounted on the carriage, flat faced teeth on the rocking plate registering with the recess, and means including a lever on the carriage for rocking said plate to move the faces of the teeth into the plane of the bottom of the face, thereby to form a substantially smooth bottom surface in which the dogs cannot engage.

7. In a calculating machine, a transversely movable carriage provided with a series of recesses, means engaging the recesses for holding the carriage against transverse movement, a member carried by the carriage provided with teeth registering with said recesses and means for moving said member to cause the teeth to eject the holding means from the recesses.

8. In a calculating machine, a transversely movable carriage provided with a series of recesses, means engaging the recesses for holding the carriage against transverse movement, a member carried by the carriage for ejecting the holding means from the recesses, and means on the carriage for operating said ejecting member.

9. In a calculating machine, a transversely movable carriage provided with a series of recesses, means engaging the recesses for holding the carriage against transverse movement, a rocking plate mounted on the carriage, teeth on said plate extending into said recesses and means on the carriage for rocking the plate to move the edges of the teeth into alinement with the surface in which the recesses are formed thereby ejecting the holding means

from the recesses and permitting free transverse movement of the carriage.

10. In a calculating machine, a shiftable carriage provided with a series of recesses, means engaging said recesses for holding said carriage against transverse movement and means for traversing said carriage comprising a finger piece fixed on said carriage, and means controlled by a second finger piece for ejecting said holding means from said recesses, said finger pieces being juxtaposed to jointly form a finger grip.

In testimony whereof, I have hereunto set my hand.

CARL M. F. FRIDEN.