May 30, 1967 J. A. MAUL 3,322,062

VARIABLE DATA PRINT CONTROL AND INTERLOCK MEANS IN PRINTING MACHINES

Filed Aug. 12, 1965 3 Sheets-Sheet 1

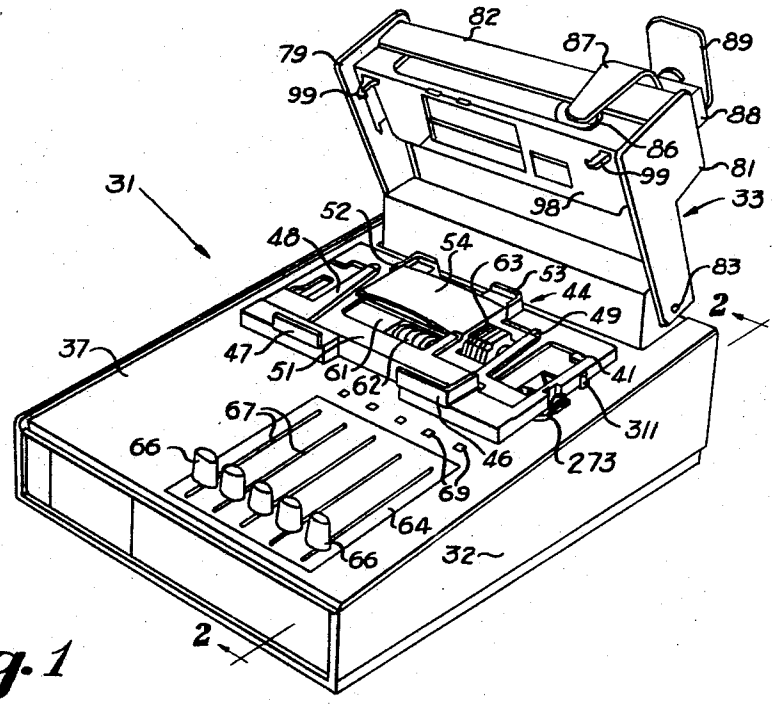

Fig. 1

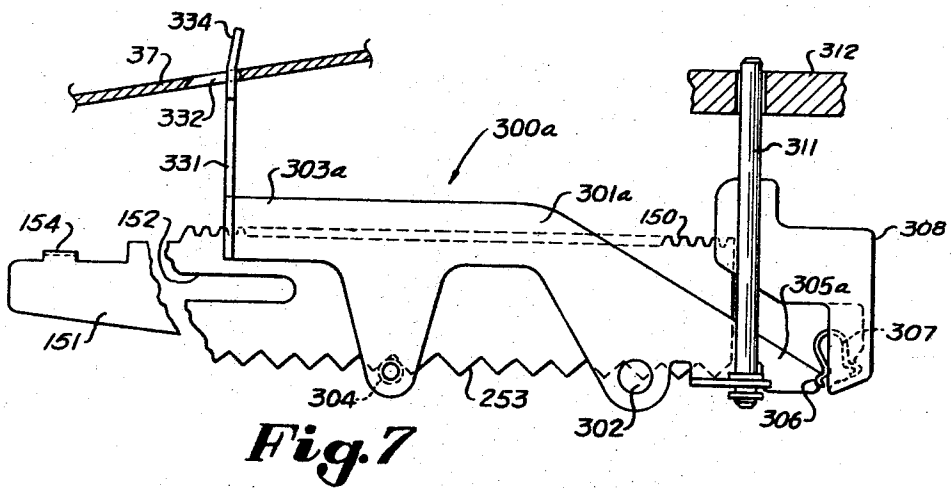

Fig. 7

INVENTOR.
JOHN A. MAUL
BY
Russell L. Root
ATTORNEY.

May 30, 1967 J. A. MAUL 3,322,062

VARIABLE DATA PRINT CONTROL AND INTERLOCK MEANS IN PRINTING MACHINES

Filed Aug. 12, 1965

3 Sheets-Sheet 2

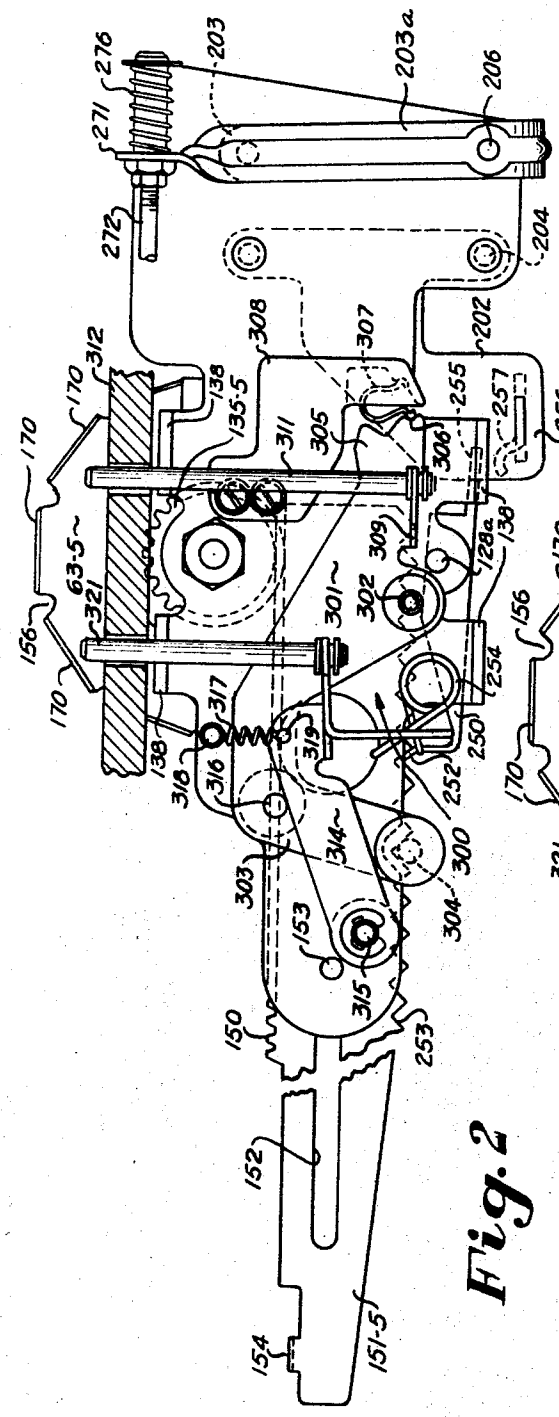

Fig. 2

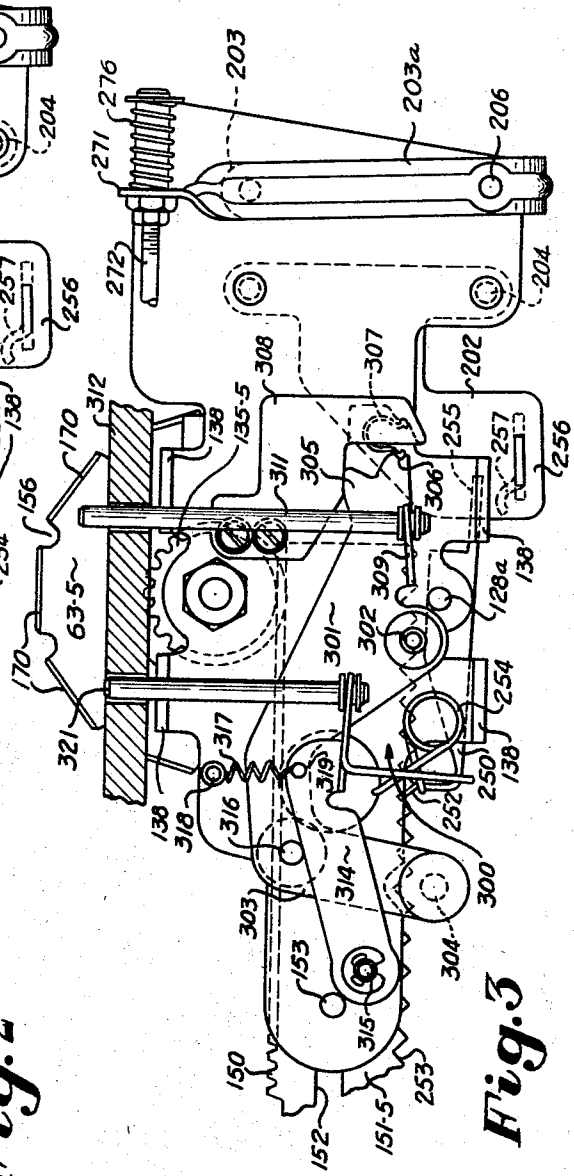

Fig. 3

INVENTOR.
JOHN A. MAUL
BY Russell L. Root
ATTORNEY.

May 30, 1967 J. A. MAUL 3,322,062

VARIABLE DATA PRINT CONTROL AND INTERLOCK MEANS IN PRINTING MACHINES

Filed Aug. 12, 1965 3 Sheets-Sheet 3

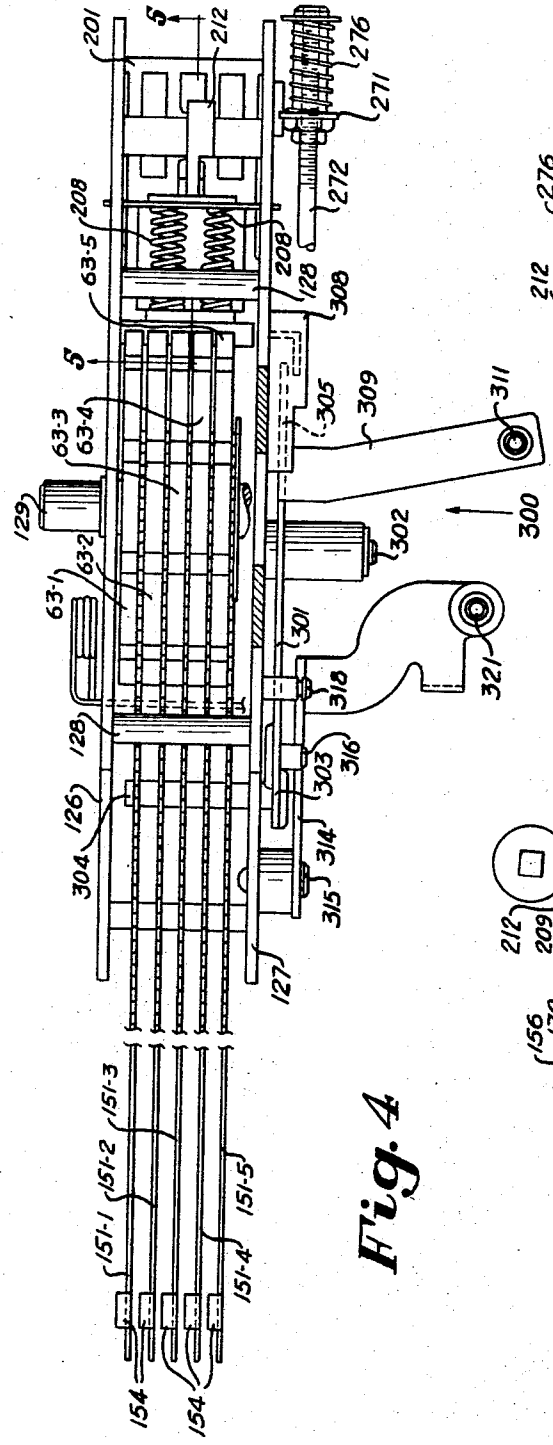

Fig. 4

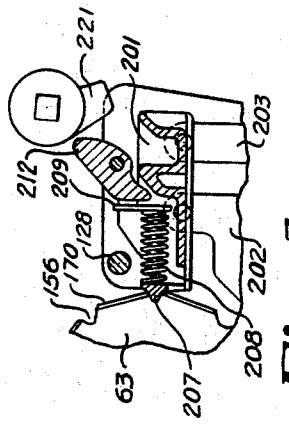

Fig. 5

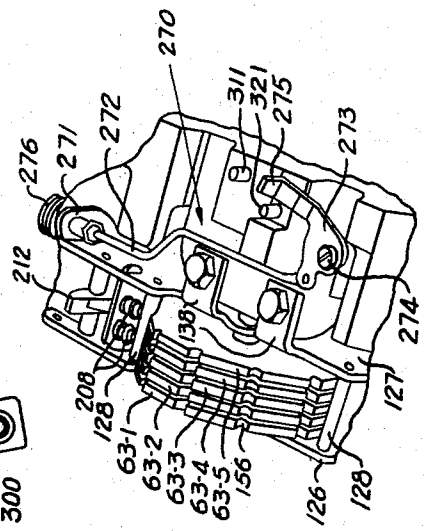

Fig. 6

INVENTOR.
JOHN A. MAUL

BY Russell L. Cook
ATTORNEY.

United States Patent Office 3,322,062
Patented May 30, 1967

3,322,062

VARIABLE DATA PRINT CONTROL AND INTERLOCK MEANS IN PRINTING MACHINES

John A. Maul, Lyndhurst, Ohio, assignor to Addressograph-Multigraph Corporation, Cleveland, Ohio, a corporation of Delaware

Filed Aug. 12, 1965, Ser. No. 479,156
5 Claims. (Cl. 101—45)

This invention relates to printing machines and particularly to manually operated printing machines of the kind in which variable data are imprinted from individually settable printing devices mounted within the machine. More specifically, the invention relates to a new and improved signalling apparatus for signalling the machine operator that a new data setting operation is required following completion of a given printing operation; in its preferred form, the signalling device of the invention provides a positive interlock preventing a further printing operation until such time as the machine has been reset for printing different data than in a previous printing sequence.

In retail credit systems of various kinds, such as those used in automotive service stations, large department stores, and the like, fixed data identifying each customer is imprinted upon appropriate sales forms, from a printing device retained in the possession of the customer, in the course of each transaction. Many of the printing machines utilized for applications of this nature also includes variable data imprinting apparatus for imprinting the same sales form with variable data indicating the amount of the sale. A preferred form of printing machine of this general kind is described and claimed in Patent No. 3,138,091 of John A. Maul, issued June 23, 1964. The signalling device of the present invention is described herein as applied to a printing machine of the kind shown in the aforesaid patent to Maul No. 3,138,-091; it should be understood that the invention is equally applicable to other comparable printing machines capable of imprinting variable data relating to sales transactions and like applications.

In the course of operation of variable data imprinting machines in credit sales systems and similar applications, the machine operator is frequently in a hurry and subject to numerous distractions. Consequently, the operator may forget to reset the individual type devices or equivalent apparatus of the printing machine, with the result that the variable data pertaining to one sales transaction is printed on a sales form or other document pertaining to a second and wholly different transaction. It will be recognized that this kind of error is highly undesirable. Thus, the need for a protective signalling device, cautioning the operator that the variable data imprinting apparatus of the machine should be reset for a current transaction, is readily apparent.

In somewhat similar printing apparatus known in the prior art, provision has been made for automatically resetting the variable data imprinting apparatus to zero following each complete printing cycle. Some machines of this kind have also provided means to prevent a subsequent printing operation until at least a part of the variable data imprinting apparatus is reset for new data for a subsequent transaction. In other prior art signalling or interlocking devices, the complete variable imprinting apparatus must be reset manually to zero before a second printing operation can take place. The manual reset to zero, however, imposes an additional burden on the already limited time of the machine operator that is quite undesirable. Moreover, and particularly with respect to automatic reset systems, the previously known apparatus has been generally cumbersome and expensive, highly undesirable characteristics in view of the fact that each sales station in the credit sales system must be equipped with a complete printing machine and the cost of these machines may be a quite significant factor determining whether to overall system is economically practical.

It is a principal object of the present invention, therefore, to provide a new and improved reset signal device for a variable data printing machine of the manually settable, manually operable type adapted for use in credit sales systems and in similar applications. It is a related object of the invention to provide a simple and inexpensive positive signalling device that also affords a direct interlock in the variable imprinting apparatus that prevents initiation of a new printing operation until at least some porton of the variable data printing apparatus is reset in accordance with a new transaction.

Another object of the invention is to provide fully automatic reset signalling, and preferably interlocking, in a manually operable variable data recorder without necessitating resetting of the variable data recording apparatus to zero or to any other home position, while at the same time affording a positive indication that the data recorder must be reset in accordance with a new transaction prior to initiation of each recording operation.

A particular object of the invention is to provide an over-center mechanism, in a signalling or interlocking system for preventing repetitive operation of a variable data recorder without resetting of the data recording apparatus, which over-center mechanism effectively reduces wear on the operating components of the reset signalling apparatus and the data recorder itself but inherently affords a positive signalling action.

An additional object of the invention is to afford a simple, economical, yet virtually foolproof signalling or interlocking apparatus for a variable data recorder of the manually operated kind suitable for use in retail credit sales systems and like applications.

Thus, the present invention is incorporated in a variable data printing machine of the kind comprising a plurality of individual type devices each settable to a plurality of different positions to present different type characters at a printing position and each including a plurality of spaced index elements aligned with similar index elements of the remaining type devices whenever said type devices are set for a printing operation. The printing machine further comprises imprinting means movable along a predetermined path in an imprinting motion to imprint a recording sheet engaging the aforesaid type characters. A reset signalling device constructed in accordance with the invention comprises a print sensing element interposed in the path of the imprinting means and displaceable from an initial position to a second position each time the imprinting means moves through its imprinting motion. A type set sensing element engages the index elements and is displaced from a first position to a second position whenever one of the type devices is set to a different type setting. An over-center, bi-stable signalling device is connected to both of the sensing elements and is moved back and forth between two stable positions. Displacement of the print sensing element to its second position results in actuation of the signalling device to a first stable position indicating that a printing operation should not proceed until the type devices have been reset, and also resets the type set sensing element to the initial position previously described. Displacement of the type set sensing element to its second position results in actuation of the signalling device to a second stable position indicating that the printing operation may proceed, and also resets the print sensing element to its first position.

Other and further objects of the present invention will be apparent from the following description and claims and are illustrated in the accompanying drawings which, by way of illustration, show preferred embodiments of the present invention and the principles thereof and what is now considered to be the best mode contemplated for applying these principles. Other embodiments of the invention embodying the same or equivalent principles may be made as desired by those skilled in the art without departing from the present invention.

In the drawings:

FIG. 1 is a perspective view of a variable data recording machine equipped with a signalling and interlocking device constructed in accordance with a preferred embodiment of the present invention;

FIG. 2 is an elevation view of the variable data recording mechanism of the machine of FIG. 1, showing the signalling and interlocking system of the present invention taken approximately along line 2—2 in FIG. 1;

FIG. 3 is an elevation view similar to FIG. 2 but showing the signalling and interlocking device of the present invention in a different operating position;

FIG. 4 is a plan view of the variable data recording apparatus and the reset signalling and interlocking device of the present invention;

FIG. 5 is a detail view of a part of the variable data imprinting mechanism taken approximately along line 5—5 in FIG. 4;

FIG. 6 is a detail perspective view of the interlocking mechanism and a part of the variable data recording apparatus; and

FIG. 7 is a simplified elevation view, similar to FIG. 2, of another form of the invention.

FIG. 1 illustrates a printing machine **31** of the kind described in the aforementioned patent of John A. Maul, No. 3,138,091, equipped with a reset signal and interlocking device constructed in accordance with the present invention. The printing or data recording machine **31** comprises a base **32** and a printing head **33**. The printing head **33** is pivotally mounted upon the base **32** for movement into and out of printing position relative to the base. In FIG. 1, the printing machine **31** is shown with its printing head **33** pivoted clear of the base **32** to permit insertion of a sales transaction form or other data recording sheet in the machine. For a printing operation, the printing head **33** is pivoted in a counterclockwise direction from the position shown to bring the printing head down onto the base in alignment with the printing devices supported on the base, as described more fully hereinafter.

The base **32** of the printing machine **31** is provided with a top cover **37** attached to a suitable rigid frame (not shown). The frame of the printing base also supports a form-mounting fixture **41**. A printing station, indicated generally by the reference numeral **44**, is located in the top central portion of the machine base **32**. The printing station **44** is bounded by appropriate bracket and gauge members **46, 47, 48** and **49**, each mounted upon the form-mounting fixture by appropriate means such as cap screws or other suitable fastening devices. The members **46, 47, 48** and **49** engage the edges of a form to be printed (not shown in the drawings), to retain the form in predetermined position at the printing station **44** of the machine.

The form-mounting fixture **41** may also be provided with a gauge member **51** having a pair of arms that extend toward two corner mounts **52** and **53** which project upwardly from the fixture **41**. Thus, a small individual printing plate or similar printing device **54** may be retained in position between the ends of the arms of gauge **51** and the corner mounts **52, 53** to hold the printing device in fixed position in the printing station **44** of the machine.

The printing machine **31** may also provide means for mounting a second printing device **61** at the printing station **44**. The printing plate **61** may be retained semi-permanently in the machine, and may comprise an embossed or relief printing plate identifying the company making the same or an individual station within an overall credit sales system. A dating device **62** may be mounted at the printing station **44** immediately adjacent the semi-permanent printing plate **61**.

The variable data imprinting apparatus in the machine **31** comprises a series of individual manually settable type devices comprising a plurality of individual type wheels **63** mounted on the base **32** of the machine at the right-hand edge of the printing station **44**. Each of the type wheels **63** has a plurality of printing elements spaced about the periphery thereof; these printing elements may include both a numerical character and a corresponding code character where the sales or other record forms imprinted in the machine are subsequently to be read and interpreted by mechanized accounting apparatus. Each of the type wheels **63** is independently rotatable to position a pre-selected numeral or other type character for printing at the printing station **44**.

Setting of the variable data in the printing machine **31** is accomplished by rotary setting of the type wheels **63**. The means for setting the type wheels includes a control panel **64** and a plurality of keys **66** that are slidable within longitudinally extending slots **67** in the control panel. Each key **66** is operatively connected to a corresponding one of the type wheels **63** by a rack and pinion mechanism as described in greater detail in relation to FIGS. 2–4. The control panel **64** may be inscribed with appropriate reference characters alongside each of the slots **67** so that the desired numeral on any type wheel can be selected by positioning the connected key **66** opposite the intended numeral in the control panel. If desired, separate indicator means may be utilized to afford a direct indication of the numbers set on the type wheels at the openings **69** immediately above the control panel **64** in the machine.

The printing head **33** of the variable data recorder **31** comprises an exterior frame including a pair of side members **79** and **81** connected together by a U-shaped channel member **82**. The two side members **79** and **81** are pivotally mounted upon the base of the machine as indicated by reference numeral **83**.

The printing head **33** carries a platen that moves transversely across the printing station **44** to imprint all of the data from the type wheels **63** and the other printing devices at the printing station upon an appropriate record form interposed between the printing head and the printing devices. The platen preferably comprises a roller platen **86** of the porous ink-impregnated type. The roller platen **86** is rotatably mounted between the lower ends of the depending arms of a yoke **87** that is movable along the greater portion of the length of the channel member **82** constituting the frame of the printing head. The yoke **87** is connected to a housing **88** of a handle assembly that includes an upwardly projecting handle **89**. The lower portion of the printing head **33** may be provided with a flexible mask **98** formed with appropriate openings corresponding to the printing elements on the base of the machine, including the printing devices **54** and **61**, the dater **62**, and the type wheels **63**. The printing head may also be provided with appropriate means for latching the head in its lowered or printing position, as represented by the latch members **99**, if desired.

The construction of the variable data imprinting apparatus of the printing machine **31** is shown in detail in FIGS. 2–5. With reference to FIG. 4, it is seen that the coded type wheels **63** are five in number, **63–1** through **63–5**, and are disposed between two fixed frame plates **126** and **127**. The frame plates are maintained in fixed spaced relation by a plurality of spacer rods **128**. The type wheels are each rotatably mounted upon a shaft **129**. The opposite ends of the shaft **129** are supported in the frame plates **126** and **127**. The frame plate **127** is provided with a series of individual flange members **138** that are utilized to mount the variable imprinting appa-

ratus frame in the base of the printing machine. In FIG. 4, the lugs or flange members **138** have been cut away to show parts of the reset signalling apparatus of the present invention, as described more fully hereinafter.

Each of the coded type wheels **63** is provided with an integrally molded pinion gear that is smaller in diameter than the type wheel. One such gear **135–5** is seen in the elevation views comprising FIGS. 2 and 3. Each of the remaining type wheels is provided with a pinion gear like the gear **135–5**.

The variable data recording apparatus further includes five individual rack members, **151–1** through **151–5**, that are aligned with the gaps between the code wheels **63–1** through **63–5**, as shown in FIG. 4. Each of the rack members **151–1** through **151–5** is provided with a plurality of gear teeth **150** formed on the upper edge thereof and engageable with the pinion gear of a respective code wheel. Thus, as shown in FIG. 2, the gear teeth **150** on the rack member **151–5** mesh with the teeth of the pinion gear **135–5** on the coded type wheel **63–5**. The individual rack members **151** are provided with longitudinally extending guide slots **152** which co-act with a guide pin **153** mounted between the frame members **126** and **127** (FIGS. 2 and 4) to maintain the rack members in alignment. The left-hand end of each rack member **151**, as viewed in FIGS. 2 and 4, is provided with a generally T-shaped lug **154** affording a convenient means to connect each rack member to one of the tabulator keys **66** (FIG. 1).

Each of the type wheels **63** has ten printing elements **170** formed on flat surfaces on the outer periphery thereof (FIGS. 2 and 3). Each of the flat printing surfaces **170** is spaced from the immediately adjacent printing element flats by a V-shaped detent-receiving recess **156** extending radially inwardly of the type wheel. As noted above, each of the flat printing elements may include a relief numerical character and, if desired, a corresponding code character. The uppermost printing element of each code wheel, as viewed in FIG. 2, bears the data to be imprinted upon a record sheet during the printing operation. That is, the uppermost type element is at printing position. By individually rotating the separate code wheels, using the racks **151**, adjusted longitudinally by means of the tabulator keys **66**, a series of type characters may be set at the printing station for printing a monetary amount or other variable data pertaining to a transaction.

As shown in FIGS. 4 and 5, a bail bar member **201** is mounted between the frame plates **126** and **127**, and the mounting arrangement for the bail bar member **201** comprises two pairs of links **202** and **203**. The links **203** are each pivotally mounted on a shaft **206** extending transversely of the frame **126, 127** and the links **202** are pivotally mounted on a similar shaft **204**. The bail bar member **201** has a generally V-shaped nose portion **207** engageable with the recesses **156** in the code wheel **63**. In its engaged position, as shown in FIG. 5, the nose portion **207** of the bail bar accurately aligns the type wheels at the printing position. A pair of coil springs **208** are incorporated in the alignment mechanism comprising the bail bar **201**; each of the coil springs **208** has one end seated upon the bail bar member **201** and the other end engaged with a plate **209** extending between the frame members **126** and **127**. The springs **208** bias the bail bar **201** toward the position illustrated in FIGS. 4 and 5 in which the nose portion **207** of the bail bar engages in the recesses **156** in the type wheels to give a positive and accurate alignment of the code wheels.

Cam and lever means are incorporated in the bail bar mechanism of the printing machine for moving the bail bar **201** to a retracted position permitting free rotation of the type wheels whenever the printing head of the machine is in the upper or non-printing position illustrated in FIG. 1. This cam and lever means comprises a cam **221** that rotates in response to pivotal movement of the printing head of the machine. Also included is a lever **212** that is pivotally mounted between the frame plates **126** and **127**, the lower end of the lever **212** being engageable with the bail bar **201**. Upon pivotal movement of the printing head to its raised position, cam **221** is rotated into engagement with the upper end of the lever **212** and pivots the lever in a counterclockwise direction to retract the bail bar **201** and thus retract the nose portion **207** of the bail bar from the type wheel recesses **156**. When the printing head is returned to its printing position, the springs **208** again cause the bail bar to engage the type wheels.

The variable data imprinting apparatus of the printing machine further includes a pre-alignment bail member **250** that is pivotally mounted upon the spacer rod **128A** immediately below the code wheels **63**. The bail member **250** is generally channel-shaped and is provided with an upwardly extending bail or nose portion **252** (see FIGS. 2 and 3). This nose portion **252** of the bail member **250** extends across all of the rack members **151** and is aligned with a series of index elements, comprising the notches **253**, formed in the lower surface of each of the rack members. On each rack member there is one index element **253** for each printing element **170** on the type wheel **63** with which the rack member is associated. Suitable spring means such as a spring **254** is provided to bias the bail member **250** into engagement with the rack members.

The end of the bail member **250** opposite the nose portion **252** terminates in a cam follower portion **255**. Each of the two links **202** is provided with an extension portion **256**, between which a cam member **257** is mounted in position to engage the cam follower portion **255** of the bail member **250**. Each time the links **202** are rotated in response to pivotal movement of the printing head of the machine, as described above, elevating the printing head away from the base of the printing machine, the cam member **257** raises and engages the cam follower portion **255** of the pre-alignment bail **250**, rotating the bail counterclockwise about its pivot **128A** and disengaging the bail bar portion **252** of the bail **250** from the rack members **151**. This releases the rack members, leaving them free for longitudinal movement to set a new monetary amount (or other variable data) in the variable data printing apparatus.

The basic construction of the printing machine **31**, as thus far described, is essentially similar to that set forth in the above identified Patent No. 3,138,091 to J. A. Maul; accordingly, only a brief review of the operation of the printing machine is necessary here. When the printing machine **31** is to be used, as in recording a sales transaction, the customer's credit plate or other similar personal printing device **54** is mounted in the machine as shown in FIG. 1. It may be assumed that the dater **62** has previously been set for the date upon which the transaction occurs. The machine operator then sets the monetary amount of the sale, or other variable data pertaining to the transaction, in the printing machine. This is accomplished by setting the individual keys **66** to the various numerical values or other representations requisite to delineation of the data entailed. In adjusting the keys **66**, the machine operator sets each of the individual settable type devices (each comprising a key **66**, a rack **151**, a gear **135**, and a type wheel **63**) to a particular position that presents a desired type character at the printing position immediately adjacent the printing device **54** (FIG. 1).

With the variable data apparatus of the printing machine thus set, a suitable recording form is placed in the printing machine and the printing head **33** is pivoted counterclockwise to printing position. The roller platen **86** is then moved transversely of the machine and makes the desired imprint from all of the printing devices of the machine, including the personal printing plate **54**, the semi-permanent plate **61**, the dater **62**, and the type wheel **63**.

At the conclusion of the complete imprinting motion, comprising the lowering of the printing head **33** and the transverse movement of the platen **86**, the printing head

is again pivoted to its inactive position as shown in FIG. 1 and the printed form is removed from the machine. For a subsequent transaction, the operator removes the printing device **54** if a new customer is involved, replaces it with another printing device, sets the individual type devices comprising the type wheels **63**, utilizing the keys **66**, to reflect the new transaction, and again proceeds with an imprinting cycle on a record sheet as described above.

Each time the printing head **33** of the machine is moved to its inactive position as shown in FIG. 1, the bail bar **201** is retracted from its engagement with the type wheels **63** (see FIG. 5) releasing the type wheels for free rotation to the next positions selected by the operator. Moreover, the pivotal motion of the links **202** upon which the bail bar **201** is mounted causes the cam member **257** to pivot upwardly from the position shown in FIG. 2, engaging the cam follower portion **255** of the pre-alignment member **250** and releasing that bail from the index elements **253** in the rack members **151**. Thus, neither the bail bar **201** nor the pre-alignment bail **250** prevents free adjustment of the individual type devices comprising the type wheels **63** when the imprinting means of the machine, constituting the print head **33**, is in its inactive or non-printing position.

Each time the print head **33** begins its imprinting motion, the bail bar **201** is released and returns, under the bias of the springs **208**, toward engagement with the type wheels **63**. Before the bail bar engages the type wheels, the resulting pivotal movement of the links **202** releases the pre-alignment bail **250** so that the nose portion **252** of that bail moves into engagement with the index elements of the rack members **151** and establishes an initial and approximately accurate alignment of the settable type devices. Thereafter, the nose portion **207** of the precision alignment bail **201** engages the type wheels and completes the alignment operation.

The printing machine **31** is provided with an alignment safety device **270** that is connected to the individual settable type devices comprising the type wheels **63** and that prevents an imprinting operation unless all of the type wheels **63** are accurately aligned at printing position. This alignment safety device, as best illustrated in FIGS. 2–4 and 6, comprises an extension member **203A** for one of the links **203** upon which the precision alignment bail **201** is mounted. The extension member or lever **203A** projects downwardly, then upwardly outside of the frame member **127** and terminates in a lug **271** located near the top of the frame member **127**.

The lug **271** has an opening which receives one end of a draw link **272**. The other end of the draw link **272** is pivotally connected to a crank **273**, the crank **273** being pivotally mounted upon the printing machine as indicated by reference numeral **274** (FIG. 6). The free arm of the crank **273** terminates in a projecting stop lug **275** that extends upwardly from the crank arm. The connection between the draw link **272** and the lug **271** on lever **203A** is not a rigid one. Rather, a compression spring **276** affords a resilient connection between these two members.

The operation of the alignment safety device **270** is effective to prevent a printing operation whenever any of the type wheels **63** is not accurately aligned in the desired printing position. Thus, if the type wheels hang up without being precisely aligned, the nose **207** of the bail member **201** cannot advance completely into the notch **156** in any type wheel that has not reached almost the desired precise rotational alignment. Under these circumstances, the bail member **201** cannot advance completely to the left to the position shown in FIG. 5, but is blocked at a position somewhat to the right of that shown. Accordingly, the one link **203** and the extension lever **203A** connected thereto are held at a position to the right of that illustrated in FIG. 2. As a consequence, the connection from the lever **203A** to the crank **273** provided by the draw link **272** holds the crank in the position illustrated in FIG. 6 with the stop lug **275** positioned to interfere with lowering of the printing head to printing position. That is, the lug **275** on the crank **273** is held in a position where it engages the lower edge of the side frame member **81** of the printing head (see FIG. 1) and prevents the printing head from moving downwardly to a position where a printing operation may be completed.

In normal operation, all of the type wheels are accurately aligned as the bail member **201** slides home to the position illustrated in FIG. 5, the nose of the bail seats, and the link **203** moves to the leftward limit of its travel. The corresponding movement of the lever **203A** attached to the link **203** drives the draw link **272** forwardly, pivoting the crank **273** in a counterclockwise direction as seen in FIG. 6 to a point where it is clear of the printing head and does not interfere with a printing operation. Accordingly, when all type characters are accurately aligned at the printing position, the alignment safety device **270** permits a full imprinting motion on the part of the imprinting means comprising the printing head **33**. That motion is prevented only under unusual circumstances when one or more of the type wheels hangs up out of alignment.

The present invention comprises a reset signalling device **300**, the preferred embodiment of which is best illustrated in FIGS. 2, 3 and 4. The reset signalling device **300** comprises a first or over-center lever **301** that is pivotally mounted on the frame member **127** as indicated by reference numeral **302**. The lever **301** has a first elongated arm **303** of C-shaped configuration projecting to the left of the pivotal mounting **302**. At the end of the arm **303**, a type set sensing element or bail **304** is mounted on the arm **303**. The sensing element **304** projects across the variable imprinting assembly underneath all of the rack members **151** and is engageable with the index elements on the rack members. This relationship is best illustrated in FIGS. 2 and 4.

The other end of the lever **301** comprises an arm **305** that terminates in a notch **306**. The notch **306** is engaged by one end of an over-center leaf spring **307** mounted in a retainer plate **308** affixed to the frame member **127**.

The arm **305** of the lever **301** is provided with an outwardly projecting lug **309**. The outer end of the lug **309** supports a print sensing element comprising a rod **311**. A loose rockable mounting is used to support the rod **311** on the lug **309**. The sensing element, rod **311**, projects upwardly through the frame **312** of the machine base and into the path of movement of the side plate **81** on the printing head **33**, as shown in FIGS. 1 and 2.

The reset signalling device **300** further includes a second lever **314** that is pivotally mounted upon the frame plate **127** as indicated by reference numeral **315** (FIGS. 2–4). An intermediate point on the lever **314** is engageable with a pin **316** that is fixedly mounted upon the over-center lever **301**. A spring **317**, connected at one end to a pin **318** mounted upon the frame member **127** and at the other end to a pin **319** mounted on the lever **314**, biases the lever **314** in a counterclockwise direction toward engagement with the pin **316**.

The free end of the lever **314** carries an upwardly projecting rod **321** constituting a stop member. As in the case of the sensing rod **311**, the connection between the rod **321** and the lever **314** preferably permits some rocking motion between the two. The stop member, rod **321**, extends upwardly through the base frame member **312** at a location inwardly of the stop lug **275** on the alignment safety crank **273**, as best shown in FIG. 6.

In considering operation of the signalling device **300**, it may be noted that the device has two stable operating conditions; the first stable operating condition is illustrated in FIG. 2, and the second stable operating condition is illustrated in FIG. 3. Moreover, these two stable operating conditions are determined by the operating positions of the over-center lever **301**, sometimes referred to hereinafter as the signalling member of the device.

Referring to FIG. 2, it is seen that with the signalling device **300** in its first stable operating condition, the signalling lever **301** is near the clockwise limit of its rotational travel, being held in stable position by the spring clip **307** and the engagement of bail **304** with the index elements **253**. The signalling lever **301** has been driven to this position by downward movement of the print sensing element **311**, which in turn has been driven downwardly by engagement with the side plate **81** of the printing head **33** in a previous printing operation (see FIG. 1). The downward position of sensing element **311**, as shown in FIG. 2, is referred to hereinafter and in the claims as the second operating position for this sensing element. The type set sensing element comprising the bail **304** is in an initial position, at the uppermost limit of its travel, engaged with the indexing element **253** of the type setting racks **151**.

With the device **300** in this first stable condition, FIG. 2, the spring **317** holds the lever **314** at the clockwise limit of its travel and this in turn maintains the stop member **321** up above the frame **312** in an active position wherein it prevents counterclockwise rotation of the crank **273** (FIG. 6) and holds the crank in a position such that its stop lug **275** prevents lowering of the print head **33** to a position where a printing operation can be completed.

From the foregoing description, it can been that with the reset signalling device **300** in its first stable operating condition as shown in FIG. 2, the device gives a positive indication to an operator that the printing machine should be reset, with respect to the variable data presented by the settable type devices comprising the type wheels **63**, in accordance with any new transaction. Consequently, the operator of the machine is clearly informed that a reset operation must be carried out before the next imprint can be taken in the machine.

When the operator of the printing machine resets one or more of the settable type devices comprising the type wheels **63**, by manipulation of the keys **66**, the rest signalling device **300** is actuated to its second stable operating condition as illustrated in FIG. 3. Thus, movement of any one of the racks **151**, whether in a forward or backward direction, cams the type set sensing bail **304** downwardly from the position illustrated in FIG. 2 toward that shown in FIG. 3. The downward movement of the bail **304** pivots the signalling lever **301** in a counterclockwise direction. The over-center spring **307** completes the counterclockwise movement of the signalling lever **301** and holds the signalling lever in the second stable position illustrated in FIG. 3. That is, the signalling lever **301** is actuated to its second stable position, indicating that a printing operation may proceed, in response to displacement of the type set sensing element **304** from the initial position shown in FIG. 2 to the second position shown in FIG. 3.

The counterclockwise movement of the signalling lever **301** to the position illustrated in FIG. 3 moves the pin **316** down, pivoting the lever **314** in a clockwise direction against the bias afforded by the spring **317**. As a consequence, the stop member **321** is moved downwardly from the active position illustrated in FIG. 2 to an inactive position, shown in FIG. 3, in which the stop member no longer interferes with pivotal movement of the crank **273** (FIG. 6). With the crank **273** free to rotate without interference from the stop member **321**, and assuming that the type wheels **63** can be accurately aligned as is the case in all normal operations of the machine, there is no further interference with operation of the imprinting means comprising the print head **33**.

The counterclockwise rotation of the signalling lever **301** also moves the print sensing element **311** upwardly to the position shown in FIG. 3. The print sensing element is now restored to its initial position and is ready to sense movement of the print head into printing position, indicating that a printing operation is taking place. In the course of the actual printing operation, the print sensing element comprising the rod **311** is driven downwardly and restores the signalling device **300** to its first stable operating condition by pivoting the signalling lever to the position shown in FIG. 2. When this occurs, the stop member **321** cannot rise immediately because the crank **273** is located above the stop member while the printing operation is carried out. But when the printing operation is completed, and the print head is raised, the crank **273** is automatically restored to the FIG. 6 position by the draw link **272**, in which it is clear of the path of stop member **321**. Thereupon the spring **317** pulls the lever **314** and the stop member **321** back to the initial upward position shown in FIG. 2, blocking any further printing operation until the type wheels have been reset.

From the foregoing description, it can be seen that the second lever **314**, pin **316** and spring **317**, form, in effect a delayed action device which allows a restoration signal to be given to the stop member **321** at the time that the first lever **301** is restored, but such that the restoration will not finally take effect until the print head **33** has been raised. This is necessary to give the actual movement blocking member, namely crank **273**, an opportunity to be restored to its blocking position, thereby clearing a path for the stop member **321** to move to its stopping position.

From the foregoing description, it will be apparent that the reset signalling device of the present invention is quite simple and inexpensive and does not add materially to the cost of the printing machine **31**. Nevertheless, the device affords a positive signalling action which, in the present instance, positively interlocks the printing machine to prevent a second printing operation unless and until the variable data imprinting apparatus comprising the type wheels **63** has been reset in accordance with a new transaction, following an initial transaction. On the other hand, and despite the fact that the reset signalling device is quite automatic in operation, there is no necessity to return the settable type devices to zero or to any other home position. The over-center construction employed for the signalling device is particularly advantageous because it is cammed out of engagement with the setting racks used for the individual type wheels as soon as the operator starts a new setting operation. This materially reduces wear upon the indexing elements of the racks and upon the sensing member **304** that engages those indexing elements.

In constructing the reset signalling device of the invention, it is not essential to use the particular indexing elements **253** employed in the preferred embodiment in sensing the reset operation. Thus, in a given mechanism it might be more convenient to utilize the rack teeth **150** on the rack members for this purpose, depending upon availability of space within the base of the printing machine and other related factors. By the same token, the gear teeth on the individual pinion gears such as gear **135–5** (FIG. 2) can be employed as the indexing elements in the sensing of the reset operation. It will thus be apparent that the invention can be readily adapted to other forms of settable type devices as, for example, type devices in which the type wheel setting racks **151** are replaced by sector gears and are coupled to the type wheels through intermediate gear chains. Of course, the teeth on the intermediate gears in a device of this kind afford appropriate indexing elements that can be used for sensing reset operation in exactly the same manner as the bail **304** senses that operation in the above described embodiment.

By the same token, the invention is not dependent upon sensing of a pivotal motion of the printing head, insofar as the necessity of sensing the actual printing operation is concerned. The pivotally mounted print head **33** of the specific printing machine **31** described above affords a convenient arrangement for detecting the imprinting motion of the printing apparatus comprising the platen **86**. In a machine of the type in which the printing head is

fixed and only the platen moves, however, the initial transverse movement of the platen itself can be sensed equally conveniently, resulting in operation no different in substance from that described above.

FIG. 7 illustrates a modified and simplified form of the present invention in which signalling is effected on a visual basis rather than by interlocking the actual printing mechanism. The signalling device **300A** illustrated therein comprises a signalling lever **301A** that is generally similar to the lever **301** and that is again pivoted on the side frame **127** of the machine as indicated by reference numeral **302**. As before, the right-hand lever arm **305A** carries the print sensing element or rod **311** that is engaged by the print head **33** of the machine during each printing cycle. Moreover, and as before, the right-hand end of the arm **305A** of lever **301A** is notched and is engaged by the over-center spring **307**.

The left-hand arm **303A** of the signalling lever **301A** again carries the sensing bail **304** that engages the indexing elements **253** on the type setting racks **151** of the machine. In this respect, the arm **303A** is essentially similar to the arm **303** described above. In this instance, however, the free end of the arm **303A** of the signalling lever **301A** is provided with a vertical extension **331** which projects upwardly through an opening **332** in the top cover **37** of the printing machine to expose a flag **334** to the view of the machine operator.

The reset signalling device **300A** is not an interlocking device, as noted above. Consequently, in this device the stop lever **321** and the associated actuating lever **314**, spring **317** and pin **316** are eliminated. These elements are replaced by the vertical extension **331** and the flag **334**.

In FIG. 7, the device **300A** is illustrated in a first stable condition generally corresponding to the first stable condition of the device **300** as illustrated in FIG. 2. Thus, the reset sensing bail **304** is in its initial position engaged with the indexing elements **253** of the type setting racks. The signalling lever **301A** is at the clockwise limit of its rotational movement and is held there in a stable condition by the spring **307**. The flag **334** projects upwardly into clear view of the machine operator and informs the operator that the printing machine should be reset for a new transaction prior to any further printing operation. As before, the reset signalling device **300A** and particularly the signalling lever **301A** are driven to this position as the result of a prior printing operation in which the print sensing element **311** is driven downwardly to its second position, as illustrated.

When the machine operator resets any one of the type wheels by movement of the associated type rack, the sensing bail **304** is driven downwardly far enough to cause the signalling lever **301A** to move to its second stable position, the movement being completed by action of the over-center spring **307**. That is, actuation of the type set sensing element **304** from its initial position as shown in FIG. 7 to its second position (corresponding to that shown in FIG. 3) pivots the signalling lever **301A** in a counterclockwise direction to a second stable position. In the second stable position of the lever **301A**, the flag **334** is pulled beneath the cover of the machine, signalling the machine operator that the machine is ready for a printing operation. At the same time, the counterclockwise rotation of the lever **301A** lifts the print sensing element **311** up to a position to be engaged by the printing head of the machine and thus prepares the device for sensing of the next printing operation.

It will be recognized that other forms of signalling could also be used with the present invention. For example, actuation of the signalling lever from one stable condition to another can be employed to actuate appropriate switches for energizing signal lights to inform the machine operator whether the printing machine is ready for a printing operation or requires re-setting. Other forms of visual or tactile signals can also be employed.

Hence, while preferred embodiments of the invention have been described and illustrated it is to be understood that they are capable of variation and modification.

What is claimed is:

1. In a variable data printing machine of the kind comprising a plurality of individual type devices each settable to a plurality of different positions to present different type characters at a printing position and each including a plurality of spaced index elements aligned with similar index elements of the remaining type devices whenever said type devices are set for a printing operation, and imprinting means movable in a predetermined direction along a predetermined path in association with an imprinting operation of the machine to imprint a recording sheet engaging said type characters, a reset signalling device comprising:

a print sensing element interposed in said path and displaceable from an initial position to a second position each time said imprinting means moves in said predetermined direction along said path;

a type set sensing element engaging said index elements and displaceable from a first position to a second position whenever one of said type devices is set to a different type setting;

and a bi-stable signalling device, associated with both of said sensing elements, actuatable upon displacement of said print sensing element to its second position to a first stable position indicating that a printing operation should not proceed without resetting of the type devices, and actuatable upon displacement of said type set sensing element to its second position to a second stable position indicating that a printing operation may proceed.

2. In a variable data printing machine of the kind comprising a plurality of individual type devices each settable to a plurality of different positions to present different type characters at a printing position and each including a plurality of spaced index elements aligned with similar index elements of the remaining type devices whenever said type devices are set for a printing operation, and imprinting means movable in a predetermined direction along a predetermined path in association with an imprinting operation of the machine to imprint a recording sheet engaging said type characters, a reset signalling device comprising:

a print sensing element interposed in said path and displaceable from an initial position to a second position each time said imprinting means moves in said predetermined direction along said path;

a type set sensing element engaging said index elements and displaceable from a first position to a second position whenever one of said type devices is set to a different type setting;

and a bi-stable signalling device, associated with both of said sensing elements, actuatable upon displacement of said print sensing element to its second position to a first stable position restoring the type set sensing element to its initial position and simultaneously indicating that a printing operation should not proceed without resetting of the type devices, and actuatable upon displacement of said type set sensing element to its second position to a second stable position restoring said print sensing element to its initial position and simultaneously indicating that a printing operation may proceed.

3. In a variable data printing machine of the kind comprising a plurality of individual type devices each settable to a plurality of different positions to present different type characters at a printing position and each including a plurality of spaced index elements aligned with similar index elements of the remaining type devices whenever said type devices are set for a printing operation, and imprinting means movable in a predetermined direction along a predetermined path in association with an imprinting operation of the machine to imprint a

recording sheet engaging said type characters, a reset signalling device comprising:

a print sensing element interposed in said path and displaceable from an initial position to a second position each time said imprinting means moves in said predetermined direction along said path;

a type set sensing element engaging said index elements and displaceable from a first position to a second position whenever one of said type devices is set to a different type setting;

a two position lever, associated with both of said sensing elements, actuatable upon displacement of said print sensing element to its second position to a first position indicating that a printing operation should not proceed without resetting of the type devices and actuatable upon displacement of said type set sensing element to its second position to a second position indicating that a printing operation may proceed;

and an over-center spring, engaging said lever, for maintaining said lever in either of its first and second positions until positively actuated to the other position.

4. In a variable data printing machine of the kind comprising a plurality of individual type devices each including a type wheel settable to a plurality of different positions to present different type characters at a printing position and each including a setting member having a plurality of spaced index elements aligned with similar index elements on the setting members of the remaining type devices whenever said type devices are set for a printing operation, and imprinting means movable in a predetermined direction along a predetermined path in association with an imprinting operation of the machine to imprint a recording sheet engaging said type characters, a reset signalling device comprising:

a print sensing element interposed in said path and displaceable from an initial position to a second position each time said imprinting means moves in said predetermined direction along said path;

a type set sensing element engaging said index elements of all of said setting members and displaceable from a first position to a second position whenever one of said setting members is moved to set the associated type wheel to a different type setting;

a two position lever, connected to both of said sensing elements, actuatable upon displacement of said print sensing element to its second position to a first position indicating that a printing operation should not proceed without resetting of the type devices and actuatable upon displacement of said type set sensing element to its second position to a second position indicating that a printing operation may proceed; and

over-center spring means, connected to said lever for maintaining said lever in either of its positions until actuated to the other;

said type set sensing element comprising a bail fixedly mounted on said lever.

5. In a variable data printing machine of the kind comprising a plurality of individual type devices each settable to a plurality of different positions to present different type characters at a printing position and each including a plurality of spaced index elements aligned with similar index elements of the remaining type devices whenever said type devices are set for a printing operation, and imprinting means movable in a predetermined direction along a predetermined path in association with an imprinting operation of the machine to imprint a recording sheet engaging said type characters, a reset signalling device comprising:

a print sensing element interposed in said path and displaceable from an initial position to a second position each time said imprinting means moves in said predetermined direction along said path;

a type set sensing element engaging said index elements and displaceable from a first position to a second position whenever one of said type devices is set to a different type setting;

a two position lever connected to both of said sensing elements, actuatable upon displacement of said print sensing element to its second position to a first position indicating that a printing operation should not proceed without resetting of the type devices and actuatable upon displacement of said type set sensing element to its second position to a second position indicating that a printing operation may proceed;

an over-center spring, engaging said lever, for maintaining said lever in either of its first and second positions until positively actuated to the other position;

and a visual signalling element, connected to said lever and displaceable between a visible position and a hidden position in response to movement of said lever between its first and second positions.

References Cited

UNITED STATES PATENTS

2,409,232	10/1946	Wesely	101—95
2,482,420	9/1949	Keuper	101—95
2,672,810	3/1954	Keuper	101—95
3,138,091	6/1964	Maul	101—95
3,279,369	10/1966	Wright	101—269

WILLIAM B. PENN, *Primary Examiner.*