Jan. 23, 1945. A. H. PIPONIUS 2,367,961

WOOD PULP SEPARATOR

Filed May 14, 1941 2 Sheets-Sheet 1

FIG. 1.

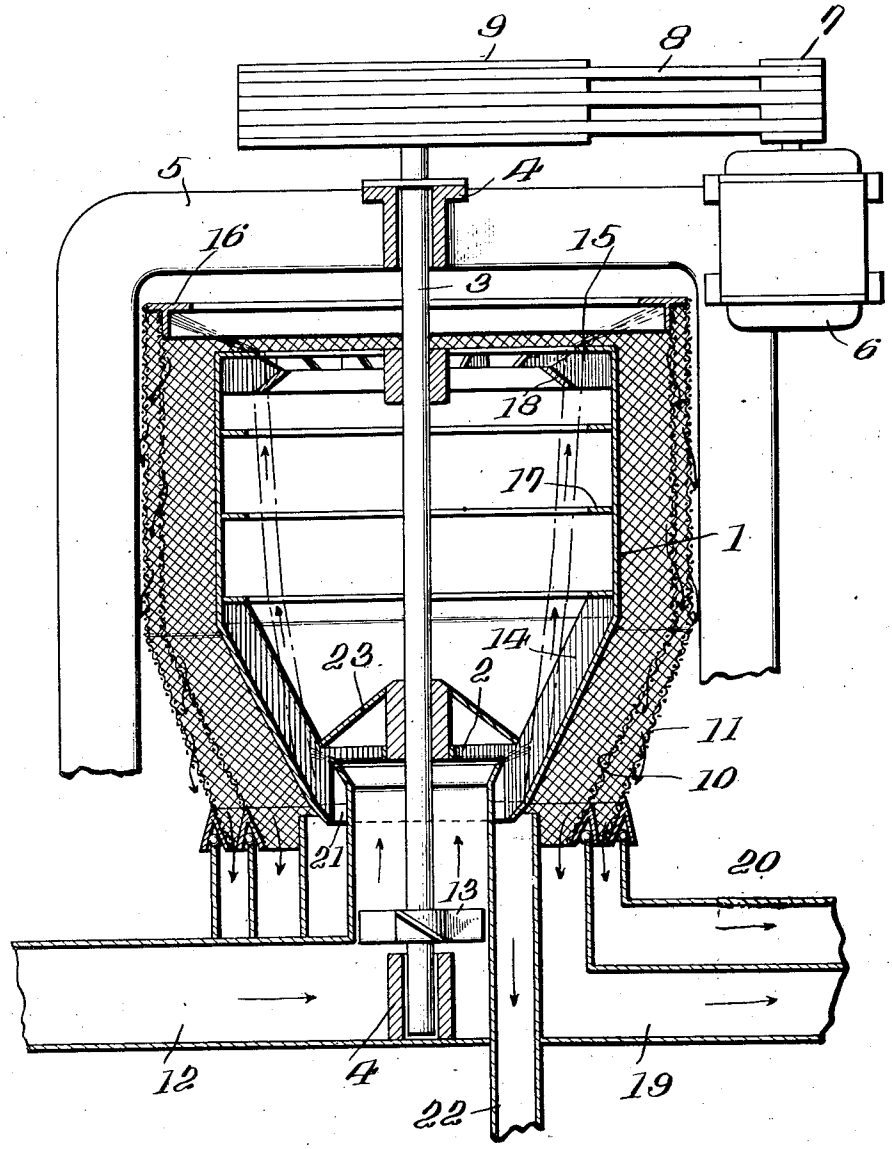

Inventor

Adolf Henrik Piponius

By E. F. Wunderoth

Attorney

Jan. 23, 1945. A. H. PIPONIUS 2,367,961

WOOD PULP SEPARATOR

Filed May 14, 1941 2 Sheets-Sheet 2

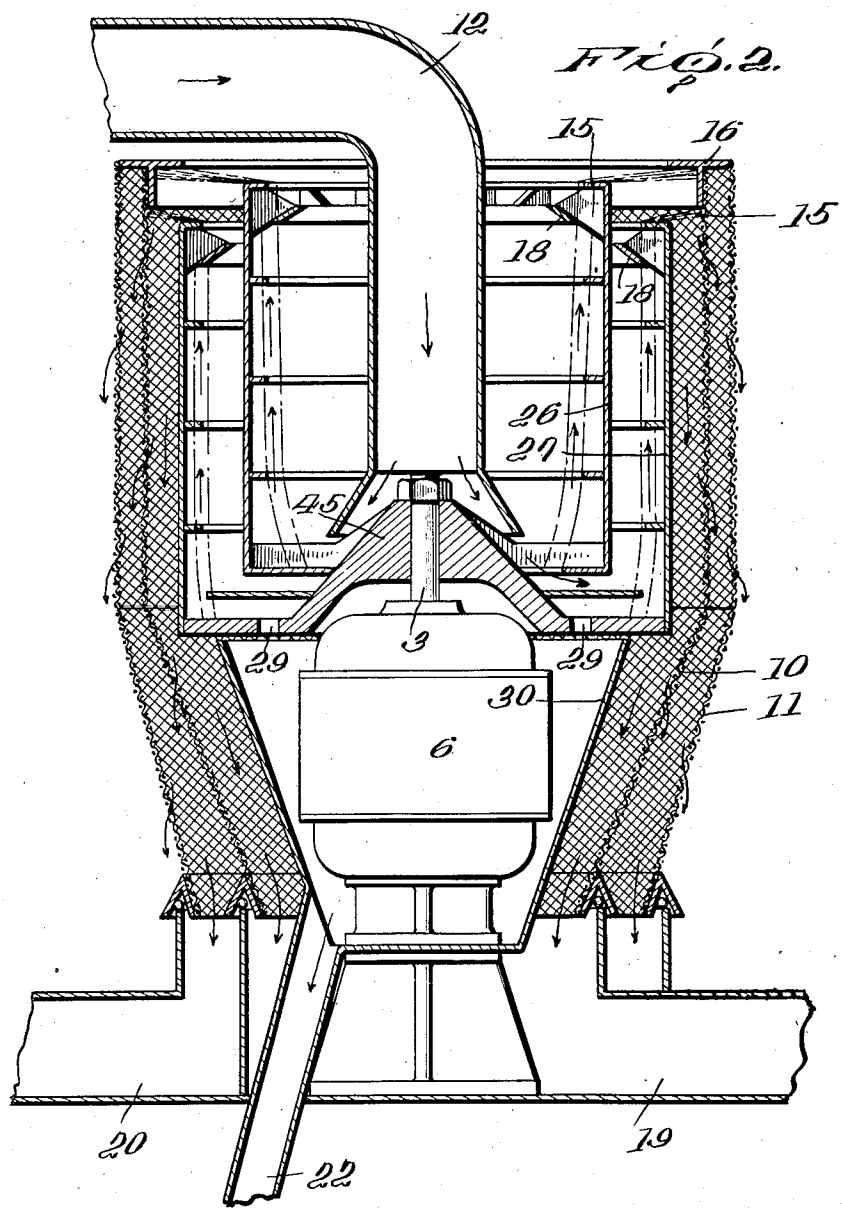

Fig. 2.

Inventor

Adolf Henrik Piponius

By E. F. Wunderoth

Attorney

Patented Jan. 23, 1945

2,367,961

UNITED STATES PATENT OFFICE

2,367,961

WOOD PULP SEPARATOR

Adolf Henrik Piponius, Tammerfors, Finland

Application May 14, 1941, Serial No. 393,471
In Sweden May 15, 1940

1 Claim. (Cl. 92—35)

This invention relates to a separator for the removal of impurities from pulp, as e. g. from sulphite cellulose.

As known, the separators used for this purpose can be divided into three groups:

1. Separators, which by the means of a strainer or of a plate, which is furnished with perforations, through which the impurities are removed from the pulp, because of their various size and form.

2. Separators, in which the separation is done by means of the centrifugal force of a swiftly rotating drum. The separation of the impurities is based upon the difference of their specific gravity.

3. Separators, which are combinations of the two above mentioned separators, and in which the purification is based upon the difference in size and specific gravity.

In separators of group 1 it is necessary to use a large straining surface, if thorough purification is desirable, and this causes a great loss of fibres with the impurities.

In separators of group 2 the power consumption is great, compared with the separation effect. Impurities, of which the specific gravity is the same as that of the pulp, also become mixed with the latter.

In separators of group 3, the advantages of groups 1 and 2 are united, but as a drawback there is a great consumption of power in comparison to the separation effect, this because of the fact that the strainers in known separators are arranged rotatably with the drum, whereby the movement energy of the pulp leaving the drum is lost. The loss of power is also increased because a special arrangement, such as a screw or the like, is required in order to keep the strainer open, which causes a sweeping or similar effect.

The purpose of the present invention is to diminish the power consumption by using the moving energy of the pulp leaving the drum, in order to accomplish a sweeping movement on the strainer.

The sweeping effect is accomplished thus, in accordance with the invention, that the drum and the strainer are arranged relating to each other so, that the velocity of the pulp coming out of the strainer and out of the drum, is different.

This is to be achieved as follows:

1. The strainer is kept in its place and the pulp coming out of the drum has quite a velocity in the direction toward the strainer, which causes the above mentioned sweeping movement.

2. The strainer has the same rotation direction as the drum, but a different rotation velocity, by which the difference in velocity causes the sweeping movement. In order that the movement energy may be utilized, the rotation velocity of the strainer must be less than that of the peripheric velocity of the drum.

3. The strainer has a rotating direction contrary to the drum, by which the resultant of the peripheric velocity of both, causes the sweeping movement.

The simplest solution is, that a cylindrical strainer is placed around the drum.

Case 1 permits a simpler strainer construction.

Cases 2 and 3 are to be considered on special occasions only.

As it sometimes may happen at pulp mills that bigger impurities, as e. g. tree branches, may enter such a contrivance, a pre-strainer is to be placed in the innermost drum with proper arrangements for the separation of such impurities.

This invention is closer specified in the following and in the drawings, which shows some different forms of construction.

Fig. 1 shows one form of the invention utilizing a single drum and two strainers and

Fig. 2 shows a modification in which there are two rotatable drums and two strainers.

In the form shown in Fig. 1, the pulp separator consists of a drum 1, which is fixed by a cross arm 2 to a vertical shaft 3, which is rotatably arranged in bearings 4, fixed in a frame 5, which shaft is driven by a motor 6, through a power transmission, consisting of a motor pulley 7, a belt 8 and a pulley 9, which is fixed to the shaft 3. Strainer drums 10 and 11 are arranged to rotate around the drum 1.

The pulp to be purified, is fed into the machine through a channel 12. If the pulp is not under high enough pressure to rise in the drum 1, an impeller 13 is fixed to shaft 3 to drive the pulp into the drum. In the drum there are arranged baffles 14, which cause the pulp to rotate at the same velocity as the drum, and the pulp is thrown over the edge 15 against the strainer 10. As the pulp is thrown out of the drum with great velocity, a reinforcement ring 16 is secured to the strainer at this place.

The centrifugal force pushes the impurities, which are heavier than the pulp, against the drum, to which horizontal baffles 17 are attached, in order to prevent impurities from travelling with the pulp. If there are impurities with the

pulp, which are lighter, they rise to the surface of the pulp and are thrown out over the inclined baffle 18.

A part of the impurities are of the same weight as the pulp and travel with it. As the pulp is thrown out of the drum in the direction of the tangent it rotates, after having struck the strainer 10, in a screw-like motion downwards along it. The lower part of the strainer is tapered to prevent too rapid descent of the pulp. The strainer 10 is made to retain as much as possible of the usable pulp fibres, but to allow as much as possible of the impurities to pass through it. The quantity which has passed through, still contains some usable fibres, i. e., less usable, and the impurities. A part of the impurities and the shortest fibres pass out through the finer strainer 11, either through the drain or for continued treatment. The clean portion which has remained inside the strainer 10, is removed through the channel 19. The impure pulp, which has remained between the strainers 10 and 11, is removed through the channel 20 to be used for second quality purposes, or to be further purified. If the pulp, which has been removed through the channel 19, has lost too much water, water can be added to the pulp at a suitable place in the drum 1 or on the strainer 10.

When the machine is stopped for cleaning, the impurities, which have remained in the drum, drop down through the slot 21 into the drain 22. The cone-shaped casing 23 prevents the impurities from getting into the supply channel 12. The cleaning of the separator can be rendered effective after the machine has been stopped, e. g., by the aid of a jet of water or steam.

In the form shown in Fig. 2, the pulp to be purified is conducted through a channel 12 into two concentric drums 26 and 27 fixed to the shaft 3 of the motor 6, by means of the member 45. The arrangement is such, that the pulp is distributed to both drums simultaneously, which thus work in parallel. The pulp travels upwards in the drums and is cleaned in the same way as in the separator shown in Fig. 1 and is finally thrown against the strainer 10 to continue its course as in Fig. 1. During the cleaning, the impurities are removed through the holes 29 to a bowl 30 and from there to the drain 22.

The drawings and the appended specification are, of course, only intended to illustrate the principle of the invention. The actual modes of construction of the separtors can vary very much within the scope of the present invention. This refers particularly to the relative position of the rotatably mounted drums and the strainers, and their position in relation to the feeding channel, through which the pulp is fed into the separator. The shaft of the drums can be in any desired position, even though the drawings show separators with vertical shaft.

What I claim and desire to secure by Letters Patent is:

A separator for the removal of impurities from wood pulp comprising a vertically arranged rotatably mounted drum, means for feeding the wood pulp to said drum, said drum separating the impurities from said wood pulp by centrifugal action, a rotatably mounted strainer located exteriorly of said drum for receiving the wood pulp discharged from said drum in order to further separate impurities from said wood pulp and driven by the liquid thrown thereagainst from the drum, the peripheral velocity of said drum and strainer being different and in the same direction so that the energy of the pulp leaving said drum is utilized for cleansing said strainer.

ADOLF HENRIK PIPONIUS.