Dec. 20, 1938. H. F. SMITH 2,141,050

ELECTRICAL APPARATUS

Filed May 26, 1934 3 Sheets-Sheet 1

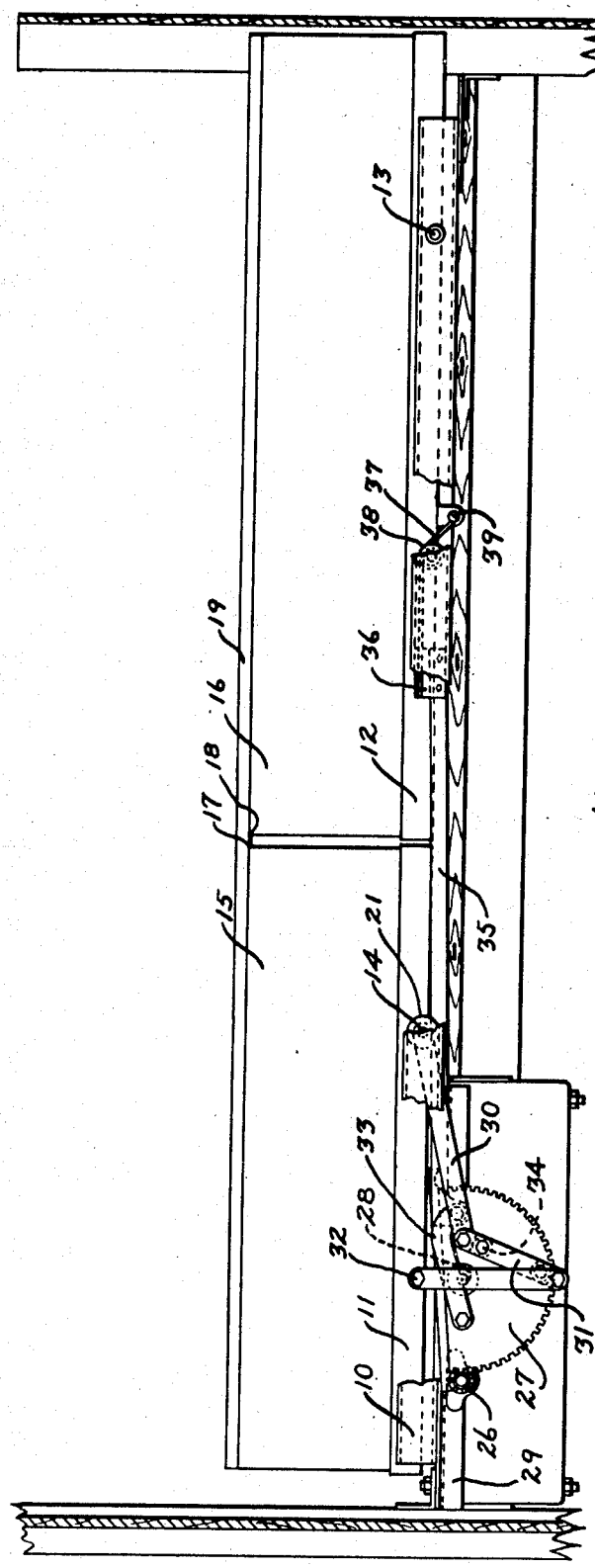

Fig. 1

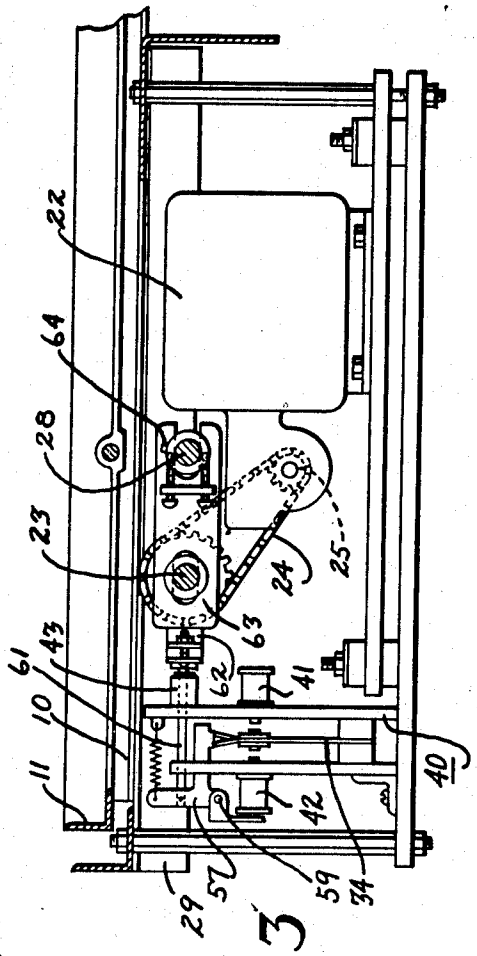

Fig. 3

Inventor

Harry F. Smith,

By Spencer Hardman & Fehr,

Attorneys

Dec. 20, 1938. H. F. SMITH 2,141,050

ELECTRICAL APPARATUS

Filed May 26, 1934 3 Sheets-Sheet 2

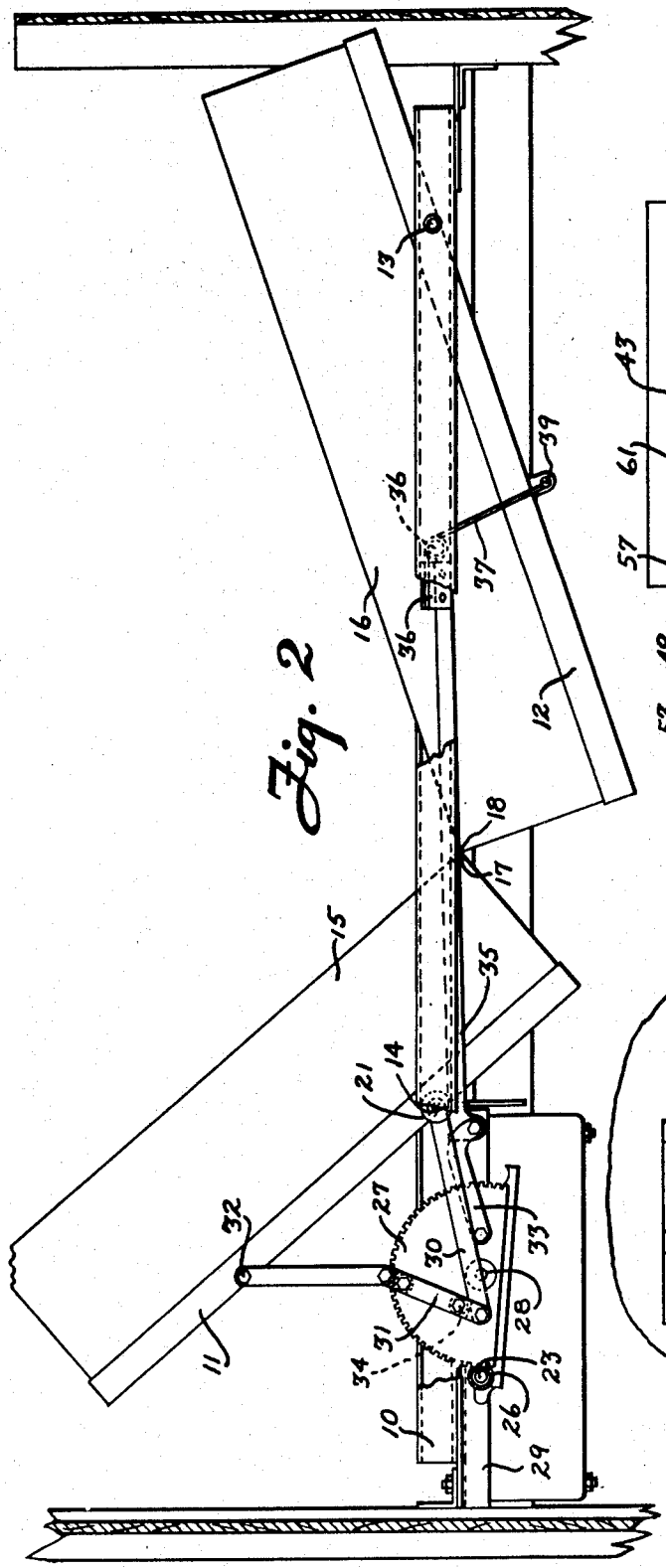

Fig. 2

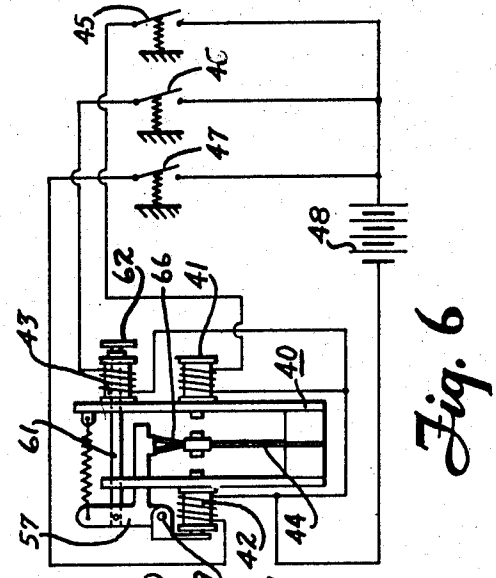

Fig. 6

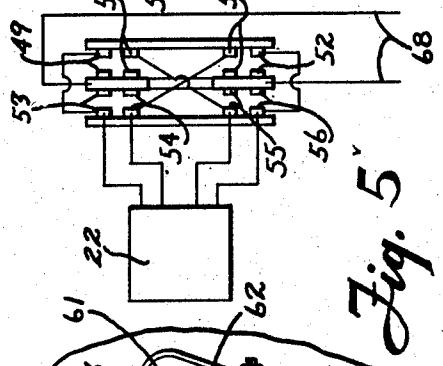

Fig. 5

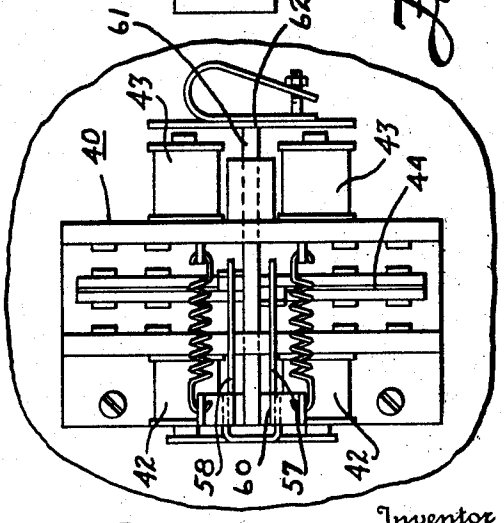

Inventor

Harry F. Smith,

By Spencer Hardman & Fehr,

Attorneys

Dec. 20, 1938. H. F. SMITH 2,141,050

ELECTRICAL APPARATUS

Filed May 26, 1934 3 Sheets-Sheet 3

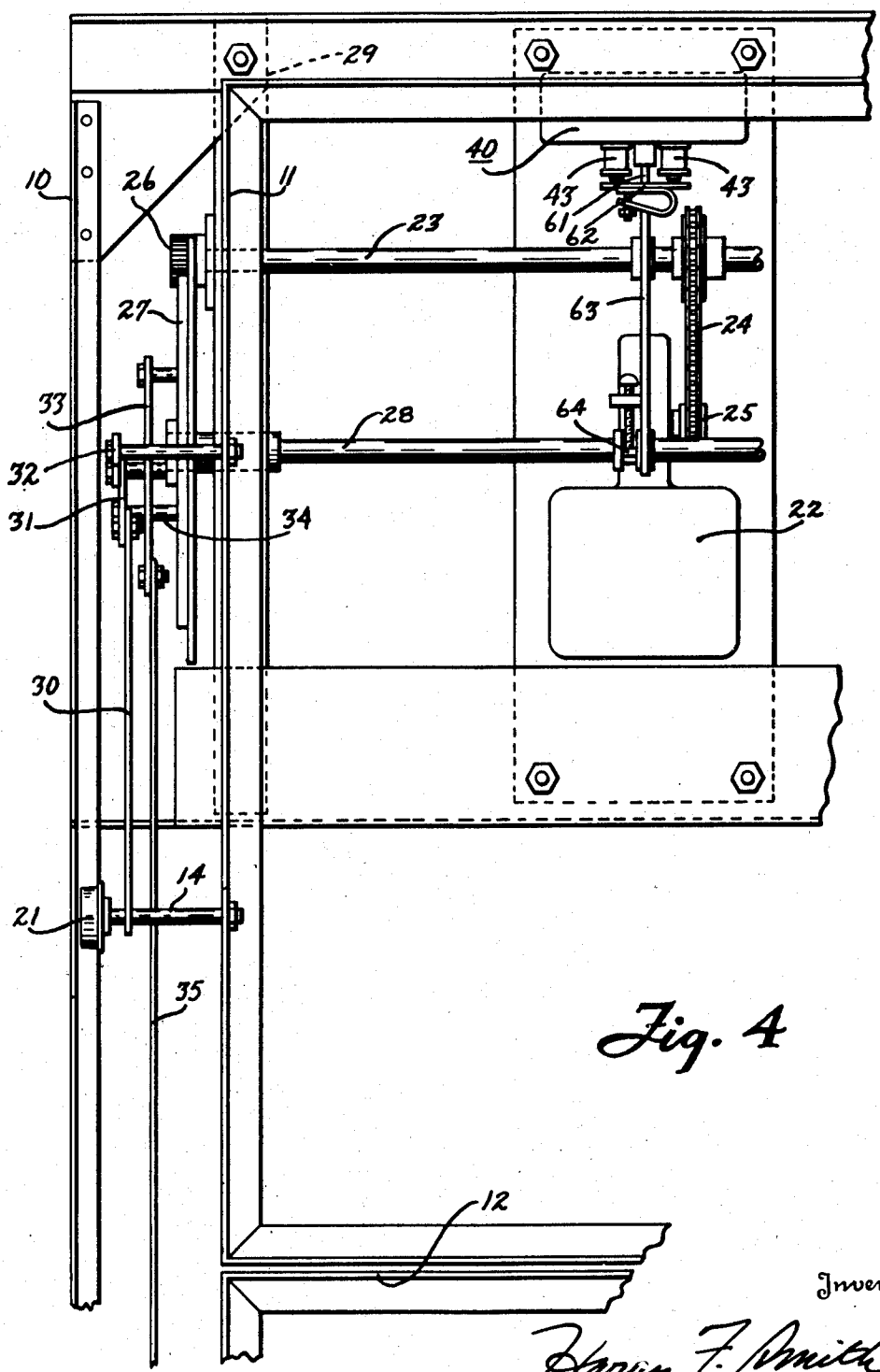

Fig. 4

Inventor

Harry F. Smith,

By Spencer Hardman & Fehr

Attorneys

Patented Dec. 20, 1938

2,141,050

UNITED STATES PATENT OFFICE

2,141,050

ELECTRICAL APPARATUS

Harry F. Smith, Dayton, Ohio, assignor to General Motors Corporation, Dayton, Ohio, a corporation of Delaware

Application May 26, 1934, Serial No. 727,775

3 Claims. (Cl. 5—66)

This invention relates to electrical apparatus and more particularly to the adjustment of a rest device, such as a bed or the like.

It is an object of this invention to provide a rest device with an adjustment which can be actuated by electrical power under the control of a person while occupying the rest device.

Another object of this invention is to provide an improved adjustable rest device in which various sections can be adjusted without causing objectionable creases in the springs, upholstering or the like.

Further objects and advantages of the present invention will be apparent from the following description, reference being had to the accompanying drawings wherein a preferred form of the present invention is clearly shown.

In the drawings:

Fig. 1 is a vertical section, partly in cross section, partly in elevation and with certain elements broken away to show more clearly the various instrumentalities;

Fig. 2 is a view somewhat similar to Fig. 1 with the adjustable sections in another position;

Fig. 3 is a vertical cross sectional view taken parallel to Fig. 1 but on a plane nearer the central axis;

Fig. 4 is a diagrammatic plan view of a portion of the bed with parts horizontally displaced to show more clearly the arrangement of levers, fulcrums, etc.;

Fig. 5 is a top view of the switch or relay which controls the motor, and

Fig. 6 is a wiring diagram of the electrical control.

A rest device or bed, according to my invention, includes a framework which has adjustable sections which may be actuated by an electric motor under the control of a person while occupying the device. Thus, it may include a stationary frame 10, somewhat similar in construction to the usual spring supporting frame work of the ordinary bed. On this stationary frame are adjustably mounted two or more spring supporting sections 11 and 12. The section 12 is mounted on a stationary fulcrum 13 while the section 11 is mounted on a movable fulcrum 14. These sections are adapted to be in aligned position as shown in Fig. 1, or they may be adjusted to an angular or sitting position as shown in Fig. 2.

The spring supporting sections 11 and 12 are adapted to support relatively thick spring or coil sections 15 and 16, preferably constructed like box springs, with the edges 17 and 18 adjacent each other; and the arrangement is such that when the sections 11 and 12 are adjusted, the upper parts of the edges 17 and 18 are not materially changed with respect to each other and there are no creases formed in the sections 15 and 16. If desired, a unitary mattress 19 may be placed over the spring sections. This mattress, because of its relatively thin construction, may bend without creating any objectionable creases therein. Thus, it will be seen that I have provided a construction in which relatively thick spring or coil sections can be provided, and they may be adjusted angularly with respect to each other and yet no objectionable lateral stresses are placed in the structure by the adjustment.

In the embodiment now preferred, the stationary frame 10 may take the form of a rectangular metal frame made of angle irons or L metal members. The sections 11 and 12 may likewise be rectangular and may also be formed of angle irons or metal L sections. The movable fulcrum 14 may take the form of a shaft or bar 20 riveted or bolted to the section 11 and carrying a wheel 21 riding on the frame 10. The fulcrum 13 may be a bar or the like passing through the frameworks 10 and 12.

A motor 22 may be supported from the section 10, and proper drive connections from the motor to the sections 11 and 12 are provided. These connections may take the form of a shaft 23 driven by a chain 24 which in turn is driven from the sprocket wheel 25 geared to the motor 22. The shaft 23 is provided with a pair of gears 26 which mesh with sectional gears 27 rigidly secured at each end of the shaft 28. This latter shaft is supported from the frame 10 in any suitable manner such as by proper subframework, a portion of which is shown at 29.

The sectional gears 27 are connected by suitable levers with the sections 11 and 12. Thus, a lever 30 is connected to the fulcrum 14 and a strap 31 rigidly bolted to and spaced away from the gear 27 pivotally connects the gear 27 with a link pivoted to the frame 11 at 32. This link thus tilts the section 11 and the lever 30 moves the fulcrum 14 toward the left to spread apart the sections 11 and 12 and avoid compression stresses at the upper parts of the edges 17 and 18 when the sections 11 and 12 are adjusted. The gears 27 are connected with the section 12 by means of a hooked lever 33 which passes over the bolt 34 of the lever 30 and is linked to the bar 35 which extends along the side of the bed and is provided at its other end with a cable attachment in the form of a block of wood 36

to which the cable 37 is attached. The cable 37 passes over the pulley 38 and is connected to the lug 39 secured to the section 12. When the gears 27 are rotated in a clockwise direction from the position shown in Fig. 1, the cable 37 permits the lug 39 to be lowered, thus tilting the section 12 to the position shown in Fig. 2.

The control for the motor 22 is shown more in detail in Figs. 5 and 6. This control includes a relay 40 which is provided with solenoids 41, 42 and 43 adapted to actuate the contact arm 44 so that it assumes either the neutral position shown in Fig. 6 or is swung either to the right or the left to close the proper contacts to cause the motor 22 to turn in the proper direction. The switches 45, 46 and 47 may be placed at any point convenient to the person while occupying the bed and these switches are adapted to adjust or stop the adjustment of the bed as will be evident. Thus when the switch 45 is closed, current flows from the battery 48 to the solenoid 41. This actuates the arm 44 to the right and closes contacts 49 to 52. This energizes the motor 22 and causes it to rotate in one direction. When the switch 47 is closed, current flows from the battery 48 to the solenoid 42, moving the arm 44 to the left and closing contacts 53 to 56, causing the motor 22 to turn in the opposite direction. Thus when the motor turns in one direction, it adjusts the bed to or towards the aligned position of Fig. 1, and when the motor turns in the opposite direction, it adjusts the bed to the angular position of Fig. 2.

Means are provided for maintaining the contacts 49 to 56 inclusive closed until the adjustment has reached its final position or until it is desired to stop the motor by means of the switch 46. Thus a pair of trip levers 57 and 58 are pivoted at 59 and are bridged together at 60. The bridge 60 is connected to an actuating link 61 which may be actuated either by the solenoid 43 or by impact at 62 from a link 63 which in turn is actuated by shaft 28 which carries the gears 27. Lug 64 is provided on the shaft 28 which engages the link 63 and causes it to impact at 62 and stop the motor when the sections 11 and 12 have reached their aligned position or final angular position. If it is desired to stop the adjustment at some intermediate position, the switch 46 is closed, thus causing current from battery 48 to flow through the solenoid 43 which in turn actuates the link 61 and the trip levers 57 and 58. These levers 57 and 58 are provided with hooks 66 which are adapted to catch the arm 44 when it is actuated either to the right or to the left and hold the arm in this position until the levers 57 and 58 are tripped by the link 61. Thus, the arm 44 is freed and permitted to assume its neutral position, thus opening the switch 46 and stopping the adjustment at the desired position. This is so because when arm 44 is in its neutral position, current can not flow from the source 68 to the motor 22.

While the form of embodiment of the invention as herein disclosed constitutes a preferred form, it is to be understood that other forms might be adopted, all coming within the scope of the claims which follow.

What is claimed is as follows:

1. In a rest device, a stationary frame having fulcrum means including fulcrum supports, movable fulcrums on said supports, a substantially rigid spring supporting section on said fulcrums, a second spring supporting section mounted on the fulcrum means, separate spring sections on said supporting sections, a power-driven shaft, and connections between said shaft and both of said supporting sections proportioned and arranged to move said supporting sections about said fulcrums and fulcrum means to maintain the tops of said spring sections together independently of any direct connection between said spring sections.

2. In a rest device, a stationary frame having fulcrum means including fulcrum supports, movable fulcrums on said supports, a substantially rigid spring supporting section on said fulcrums, a second spring supporting section mounted on the fulcrum means, separate spring sections on said supporting sections, a power-driven shaft, eccentrics on said shaft, and longitudinal bar connections between said eccentrics and both of said supporting sections proportioned and arranged to move said supporting sections about said fulcrums and fulcrum means to maintain the tops of said spring sections together independently of any direct connection between said spring sections.

3. In a rest device, a body supporting means including a plurality of separate body supporting resilient sections having resilient upper surfaces, tilting supporting means for said plurality of separate sections, said tilting supporting means including means for maintaining an edge portion of each of the upper surfaces of said plurality of separate sections in engagement with each other during the tilting of the separate sections independently of any direct connection between said separate sections.

HARRY F. SMITH.