March 13, 1951 H. H. WOLFE 2,545,063

DISPENSING PUMP HAVING MOTOR-DRIVEN HOSE RETRACTION

Filed Feb. 10, 1948 3 Sheets-Sheet 1

FIG. 1

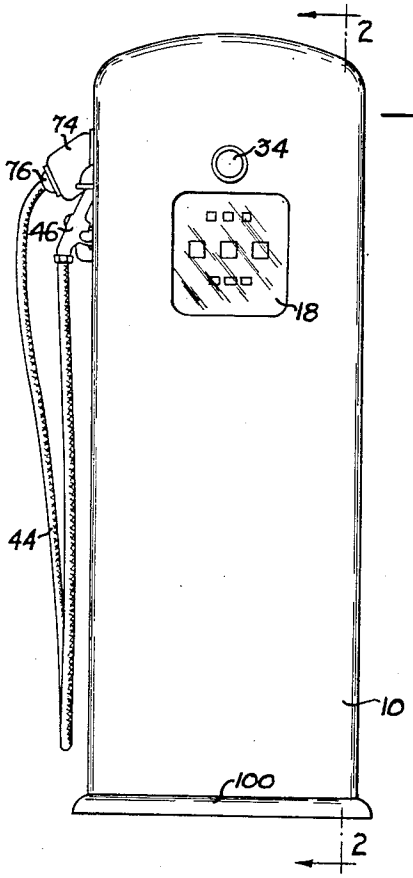

FIG. 4

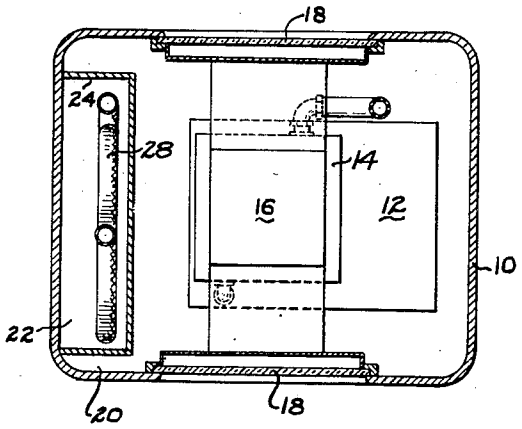

FIG. 6

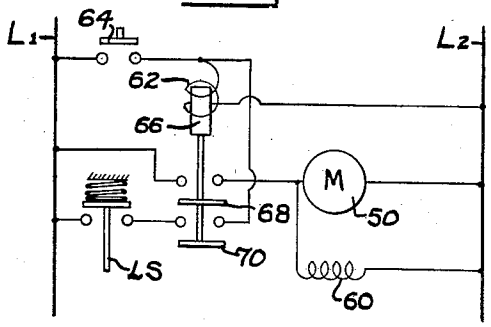

FIG. 5

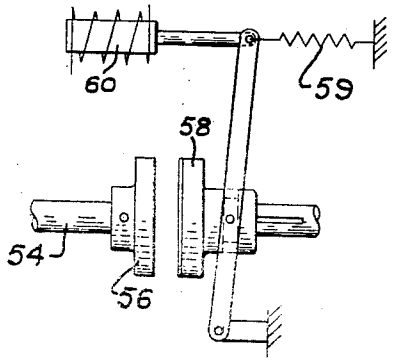

FIG. 7

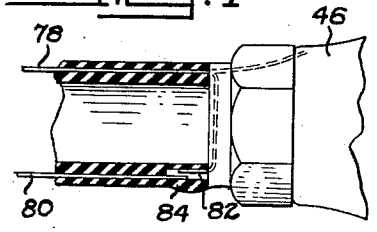

INVENTOR
H. HIX WOLFE
BY
Toulmin & Toulmin
ATTORNEYS

March 13, 1951 H. H. WOLFE 2,545,063

DISPENSING PUMP HAVING MOTOR-DRIVEN HOSE RETRACTION

Filed Feb. 10, 1948 3 Sheets-Sheet 2

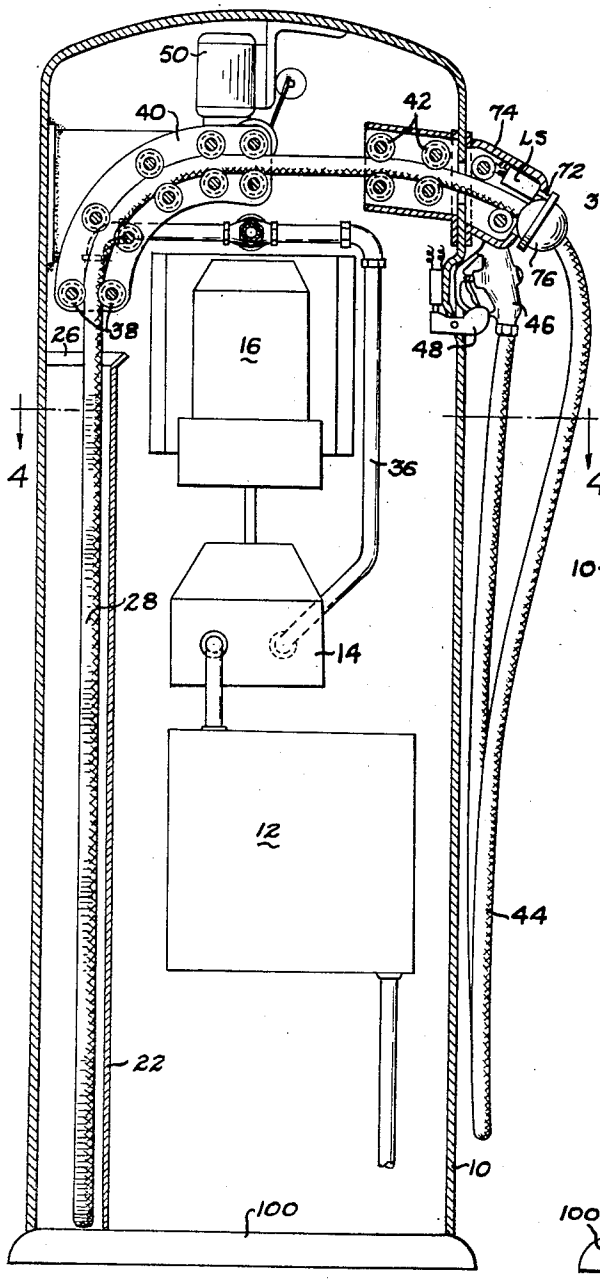

FIG. 3

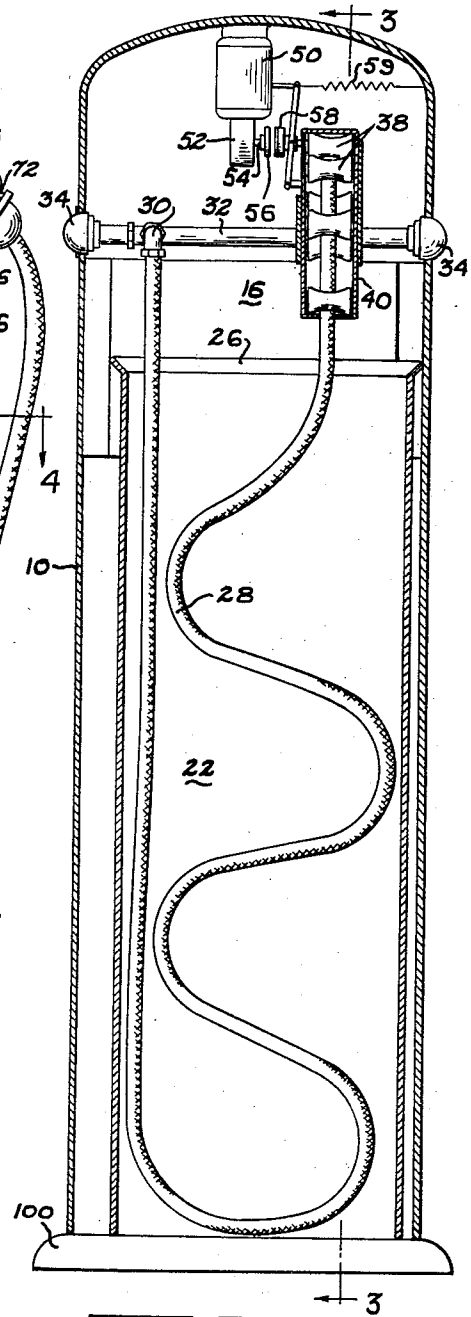

FIG. 2

INVENTOR
H. HIX WOLFE
BY
Toulmin & Toulmin
ATTORNEYS

March 13, 1951 H. H. WOLFE 2,545,063

DISPENSING PUMP HAVING MOTOR-DRIVEN HOSE RETRACTION

Filed Feb. 10, 1948 3 Sheets-Sheet 3

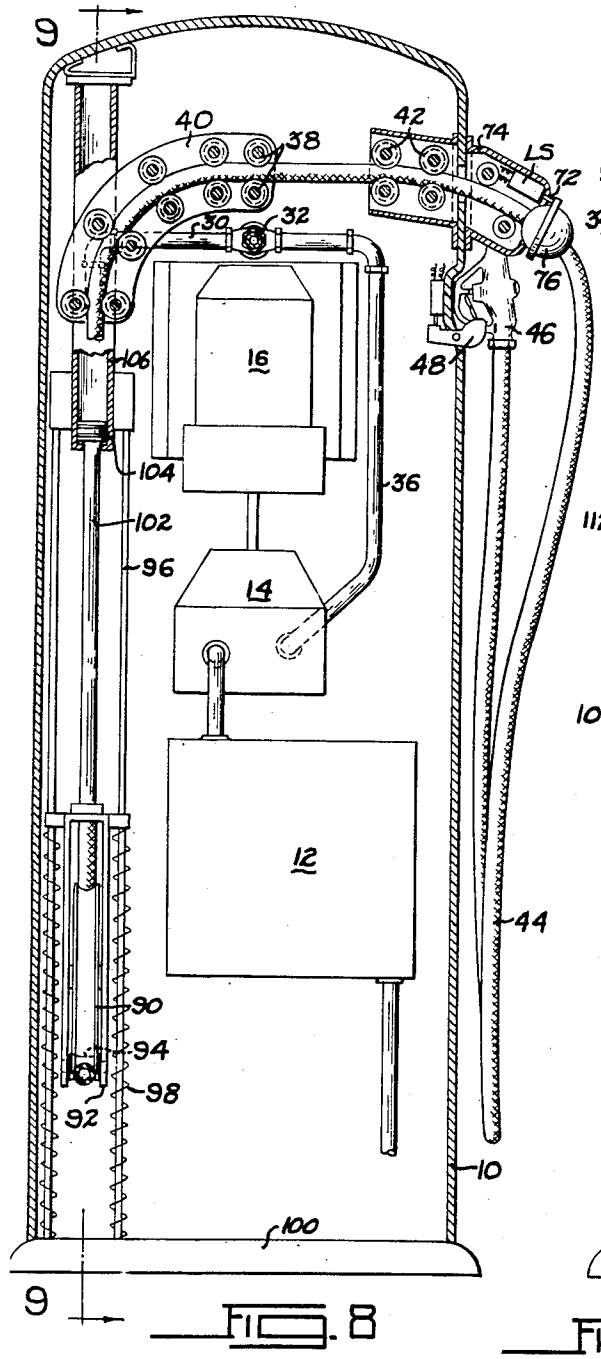

FIG. 8

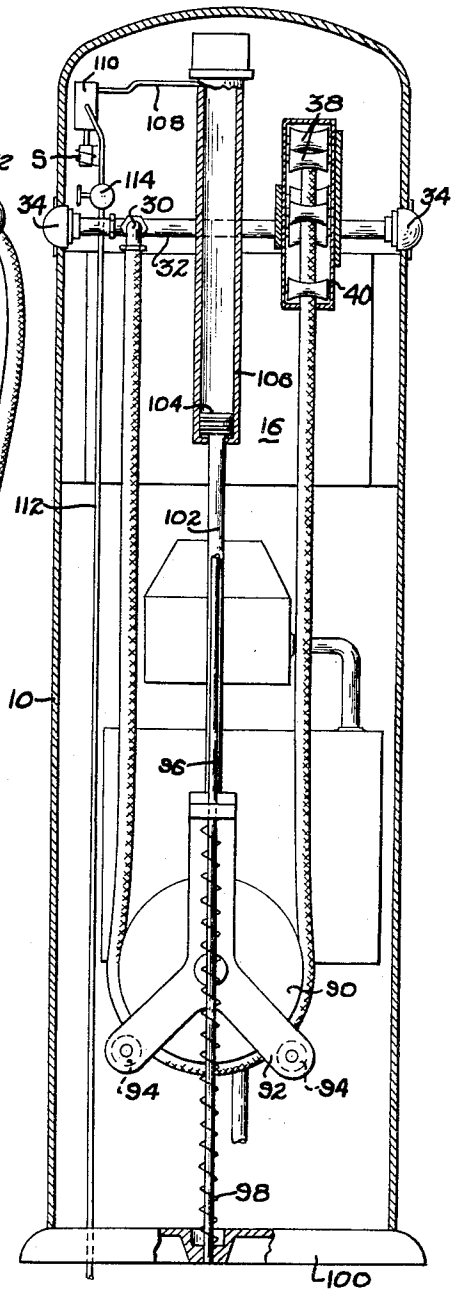

FIG. 9

INVENTOR
H. HIX WOLFE
BY
Toulmin & Toulmin
ATTORNEYS

Patented Mar. 13, 1951 2,545,063

UNITED STATES PATENT OFFICE

2,545,063

DISPENSING PUMP HAVING MOTOR-DRIVEN HOSE RETRACTION

Harley Hix Wolfe, Dayton, Ohio, assignor to The Dayton Pump and Manufacturing Company, Dayton, Ohio, a corporation of Ohio

Application February 10, 1948, Serial No. 7,408

6 Claims. (Cl. 222—74)

1

This invention relates to dispensing pumps of the types usually employed in filling stations for dispensing gasoline and other fuels.

In connection with pumps of this type it has been found necessary to increase the effective length of the hose in order to provide for the adequate servicing of all types of vehicles and similar units to which it is desired to deliver the gasoline or other liquid being pumped.

Many arrangements have been devised for this purpose and, in general, all are characterized by having a long length of hose which hangs either inside or outside the pump and which is available at any time it is necessary to use the maximum hose length.

In connection with arrangements of this type there is either provided one or more loops of the hose hanging inside the pump or one or more coils or convolutions externally of the pump, and together with these loops or convolutions are provided means for normally maintaining the said coils in their extended position. Thus, if the coils or loops are inside the pump housing the length of hose normally available is that which hangs in a single depending loop on the outside of the pump housing between the nozzle hook and the point from which the hose emanates from the pump housing.

In order to use the additional length of hose it is withdrawn from the pump housing by the operator by pulling it from the pump housing and it is thereafter returned to the pump housing by releasing the tension on the hose. In the case of the coils or convolutions externally of the pump the additional length of hose is also made available by pulling the hose out and then suitable resilient means are provided for returning the coils or convolutions to position when the hose is released.

The external coils or convolutions are not particularly desirable because of the large bulk of hose which hangs outside the pump and the possibility that the hose may be injured due to its exposed position. The inside loops or coils are more satisfactory, but the problem is encountered in connection with properly counter balancing the hose so that it will return into the pump housing when released but at the same time will not be difficult to draw from the pump or to hold in extended position during use.

The primary object of the present invention is to provide a hose arrangement for dispensing pumps wherein a substantial length of the hose is normally retained within the pump housing from where it can be drawn for use at any time.

2

Another object of this invention is to provide a motor driven retraction unit for returning the additional length of hose to within the pump housing when not in use.

Still another object is to provide an arrangement for a dispensing pump wherein there is a substantial length of hose within the pump housing which can be readily drawn therefrom for use, which is retained in extended position when in use, and which is power driven back into the housing when not in use.

A still further object of this invention is to provide an arrangement as set forth in the foregoing objects and in which counter balancing pulleys, springs, and the like are eliminated.

These and other objects and advantages will become more apparent upon reference to the following description taken in connection with the accompanying drawings in which:

Figure 1 is an elevational view of a typical dispensing pump adapted for having the hose arranged therein according to this invention;

Figure 2 is a vertical section through the pump and is indicated by the line 2—2 on Figure 1;

Figure 3 is a vertical section through the pump and is indicated by the line 3—3 on Figure 2;

Figure 4 is a plan section taken through the pump and is indicated by the line 4—4 on Figure 3;

Figure 5 is a view showing one type of clutch mechanism which can be used to connect the drive motor with the hose driving roller;

Figure 6 is a wiring diagram showing one manner of controlling the hose retracting motor of Figures 1 through 5;

Figure 7 is a fragmentary view showing how a control switch for the motor could be built into the dispensing hose at the nozzle end thereof;

Figure 8 is a sectional view through a pump housing similar to Figure 3 but showing a modified arrangement of the hose within the housing; and

Figure 9 is a sectional view indicated by the line 9—9 on Figure 8.

Referring to the drawings, the arrangement shown in Figures 1 through 5 comprises a dispensing pump having a housing 10 and within which is mounted the usual pump 12, meter 14, and computer and indicator 16 suitably supported and interconnected in the customary manner.

As seen in Figure 4 the computer-indicator 16 is arranged with a face 18 opening out each of the front and back of the pump, but at least one

side part, as at 20, is substantially unobstructed by any of the components of the dispensing pump.

Accordingly, according to this invention a compartment 22 is provided adjacent one side wall of the pump and this compartment is enclosed and confined by suitable wall means as, for example, the sheet metal enclosing the framework 24.

This framework has its upper open edge flared out as at 26 and forms a receptacle in which the dispensing hose 28 of the pump loosely lays.

It will be apparent from Figure 2 that a substantial length of hose can be introduced into the compartment 22 and that no pulleys, counterweights, springs, or other devices are necessary to keep the hose in position and away from the working auxiliaries of the pump.

One end of the hose 28 is connected as at 30 with the member 32 which has the sight glass elements 34 positioned over the indicator faces and which is connected by a conduit 36 with the discharge side of the meter 14. At its other end the hose 28 extends through a plurality of roller pairs 38 carried on a bracket 40 so arranged that the hose is guided around a relatively long radius and across the top of the pump to the roller pairs 42 which support and guide the hose as it emerges from the side of the pump.

The remainder of the hose hangs in a loop outside the pump as at 44 and on the free end of the hose there is a nozzle 46 adapted for being supported on a nozzle hook 48 when the hose is not in use. Normally the loop 44 outside of the pump will serve passenger cars and the like while the length of hose within the pump and resting in the compartment 22 is available for cars which are not properly positioned relative to the pump, for trucks, and other instances where the loop 44 does not contain sufficient hose.

As mentioned before, the hose 28 can be drawn from the pump housing freely and once drawn therefrom is retained in its extended position and then can be motor driven back into the pump. This is accomplished by powering one or more of the rollers 38 and according to this invention this is accomplished by a motor 50 suitably mounted within the pump housing and having a geared head 52 which imparts relatively low speed rotation to the output shaft 54 thereof.

As will be seen in Figure 5, the output shaft 54 has a clutch member 56 pinned thereto, and the roller shaft has a clutch member 58 slidable thereon. A spring 59 normally separates the clutch parts and a solenoid and armature 60 is energizable for moving the clutch part 58 into driving engagement with the clutch part 56. The motor 50 will drive the roll in a direction to pull the hose into the pump housing and deliver it to the compartment 22. At the same time the hose can be freely drawn from the housing when the motor and clutch are de-energized and will remain in its extended position due to the fact that there are no counterweights or springs tending to return it to the housing.

The motor 50 is adapted for being selectively energized and a suitable control circuit is illustrated in Figure 6. In Figure 6 the power lines are indicated at L1 and L2 and connected therebetween is a contactor coil 62 which is in series with the normally open switch 64. Closure of the switch 64 will energize coil 72 and cause the armature 66 thereof to move upwardly and thus to close the blades 68 and 70 associated with the contactor. The blade 68 completes a circuit between the power lines L1 and L8 and through the drive motor 50 and solenoid 60 and thus starts the motor in its hose retraction movement. The other of the blades, 70, bypasses the switch 64 and this provides a holding circuit for the coil 62. In series with the blade 70 is a normally closed limit switch LS which is positioned adjacent the point of emergence of the hose from the pump housing as will be seen in Figure 3. The operating plunger 72 of the switch projects from the casting member 74 in which the switch is mounted and is thus in position to be engaged by the rubberlike ball 76 mounted on the hose.

When the motor 50 and solenoid 60 have been energized to move the hose in its retracting direction, they will remain energized until the ball 76 engages and opens the limit switch LS. At that time the motor 50 and solenoid 60 become de-energized and the hose thereafter remains at rest. The ball 76 thus provides the means for actuating the limit switch LS, for de-energizing the motor 50 and solenoid 60, and at the same time operates as a stop to limit the movement of the hose.

The switch 64 may be arranged for actuation in any suitable manner, but one arrangement for the switch is within the hose 28 adjacent the nozzle 46 as shown in Figure 7.

The usual dispensing hose includes a ground wire 78 and according to this invention a second wire 80 may be included therein and the switch 64 provided for by bringing the ends of the wires 78 and 80 into relatively closely spaced relation as seen at 82. The wires can then be brought together by pressing on the hose at 84 and the motor 50 thus controlled.

Another form of this invention is illustrated in Figures 8 and 9 wherein the hose within the pump housing is carried in a single loop on which runs a pulley 90. The pulley 90 is journaled in a bracket 92 that includes the retaining rolls 94 and which is guided for vertical movement within the pump housing as by means of the rods 96. Elongated compression springs 98 may be provided between the base 100 of the pump housing and the bracket 92 in order thereby to counter balance the weight of the pulley and bracket. The pulley and bracket are adapted for being power operated in at least one direction by the plunger 102 connected to the bracket and extending upwardly therefrom and carrying a piston 104 on its upper end which is slidable in a cylinder 106. The upper end of the cylinder 106 is suitably rigidly supported adjacent the upper end of the housing and together with the rod 102 is of such a length that the pulley 90 and bracket 92 can be moved a substantial distance within the pump housing.

The piston 104 may be actuated by fluid pressure, either hydraulic or pneumatic, and there is connected to the upper end of the cylinder 106 by a conduit 108 a control valve 110 which receives pressure fluid through a conduit 112 and which is adapted for actuation into open and closed positions by means of a solenoid S connected with the valve.

According to this invention the valve 110 may normally occupy a position wherein the conduit 108 is connected to exhaust, thus permitting the hose to be drawn freely from the pump at any time. Then, when it is desired to return the hose into the pump housing the solenoid S is energized to shift the valve 110 into position to interconnect the conduits 112 and 108 thereby to drive the piston 104, rod 102, bracket 92, and the pulley

90 downwardly to extend the hose loop. During this movement the rate of travel of these movable parts may be controlled by the throttle valve 114 positioned in the conduit 112.

The general arrangement of the pump housing and its operative components and the hose guides are substantially identical with those illustrated in Figures 1 through 3 and, accordingly, similar parts are similarly numbered in Figures 8 and 9.

In the case of either of the modifications illustrated, it will be apparent that the hose can readily be drawn from the pump housing for use at any time. The hose will remain in its extended position due to the lack of any urging force to return to the pump housing until the motor controlled retraction unit is energized. At that time the hose will be redrawn into the housing and will stop at a suitable rest position until again withdrawn from the pump.

By means of this invention the fairly heavy and stiff dispensing hose which it is necessary to use with pumps of this nature can very readily be handled and the mechanism for handling the hose is relatively small and inexpensive.

It will be understood that this invention is susceptible to modification in order to adapt it to different usages and conditions and, accordingly, it is desired to comprehend such modifications within this invention as may fall within the scope of the appended claims.

I claim:

1. In a fluid dispensing pump having a housing, a fluid outlet internally of said housing, a flexible hose connected with said outlet and extending through one side wall of said housing, a dependant loop in said hose inside said housing, a pulley riding on the bottom of said loop, and motor means selectively energizable for driving said pulley downward to draw said loop into extended position.

2. In a dispensing pump having a housing, a fluid outlet for said pump internally of said housing, a flexible dispensing hose connected with said outlet and extending out through one wall of said housing, a dependant loop in said housing, a pulley riding on the bottom of said loop, guide means guiding said pulley in vertical movement within said housing, and motor means connected to drive said pulley in said vertical movement and selectively energizable from externally of said housing.

3. In a dispensing pump having a housing, a fluid outlet for said pump internally of said housing, a flexible dispensing hose connected with said outlet and extending out through one wall of said housing, a dependant loop in said housing, a pulley riding on the bottom of said loop, guide means guiding said pulley in vertical movement within said housing, and motor means connected to drive said pulley in said vertical movement and selectively energizable from externally of said housing, said motor comprising a fluid operable plunger and a cylinder within which said plunger reciprocates.

4. In a dispensing pump having a housing and a fluid outlet internally thereof, a flexible dispensing hose connected with said outlet and extending through one side wall of said housing, a pulley riding on said hose at the bottom of said loop, plunger means connected with said pulley and extending upwardly therefrom, a cylinder suspended from the upper part of said pump and opening downwardly to receive said plunger, and means selectively operable for supplying pressure fluid to the upper end of said cylinder for urging said plunger and pulley downwardly.

5. In a dispensing pump having a housing and a fluid outlet internally thereof, a flexible dispensing hose connected with said outlet and extending through one side wall of said housing, a pulley riding on said hose at the bottom of said loop, plunger means connected with said pulley and extending upwardly therefrom, a cylinder suspended from the upper part of said pump and opening downwardly to receive said plunger, means selectively operable for supplying pressure fluid to the upper end of said cylinder for urging said plunger and pulley downwardly, and guide rods for guiding said pulley toward and away from said cylinder and having one end connected with said cylinder and the other end connected with the base of said pump.

6. In a fluid dispensing pump, a housing, a fluid outlet for said pump internally of said housing, a flexible dispensing hose connected with said outlet and extending through one side wall of said housing, a dependant loop in said hose within said housing, a pulley riding on said hose at the bottom of the loop therein, a frame journaled in said pulley, keeper rolls mounted in said frame and retaining said hose on said pulley, a fluid motor comprising a piston and a cylinder connected between said frame and the upper part of said housing, guide rods connected between said motor and the bottom of said pump and slidably guiding said frame in vertical movements within said housing, and means selectively operable for admitting pressure fluid to said motor for driving said frame and pulley downwardly.

H. HIX WOLFE.

REFERENCES CITED

The following references are of record in the file of this patent:

UNITED STATES PATENTS

Number	Name	Date
1,489,664	Dowrelio	Apr. 8, 1924
1,506,517	Dowrelio	Aug. 26, 1924
2,315,085	Churchward	Mar. 30, 1943
2,339,668	Baldwin et al.	Jan. 18, 1944