TERMINAL APPLICATOR

Filed March 19, 1965 6 Sheets-Sheet 1

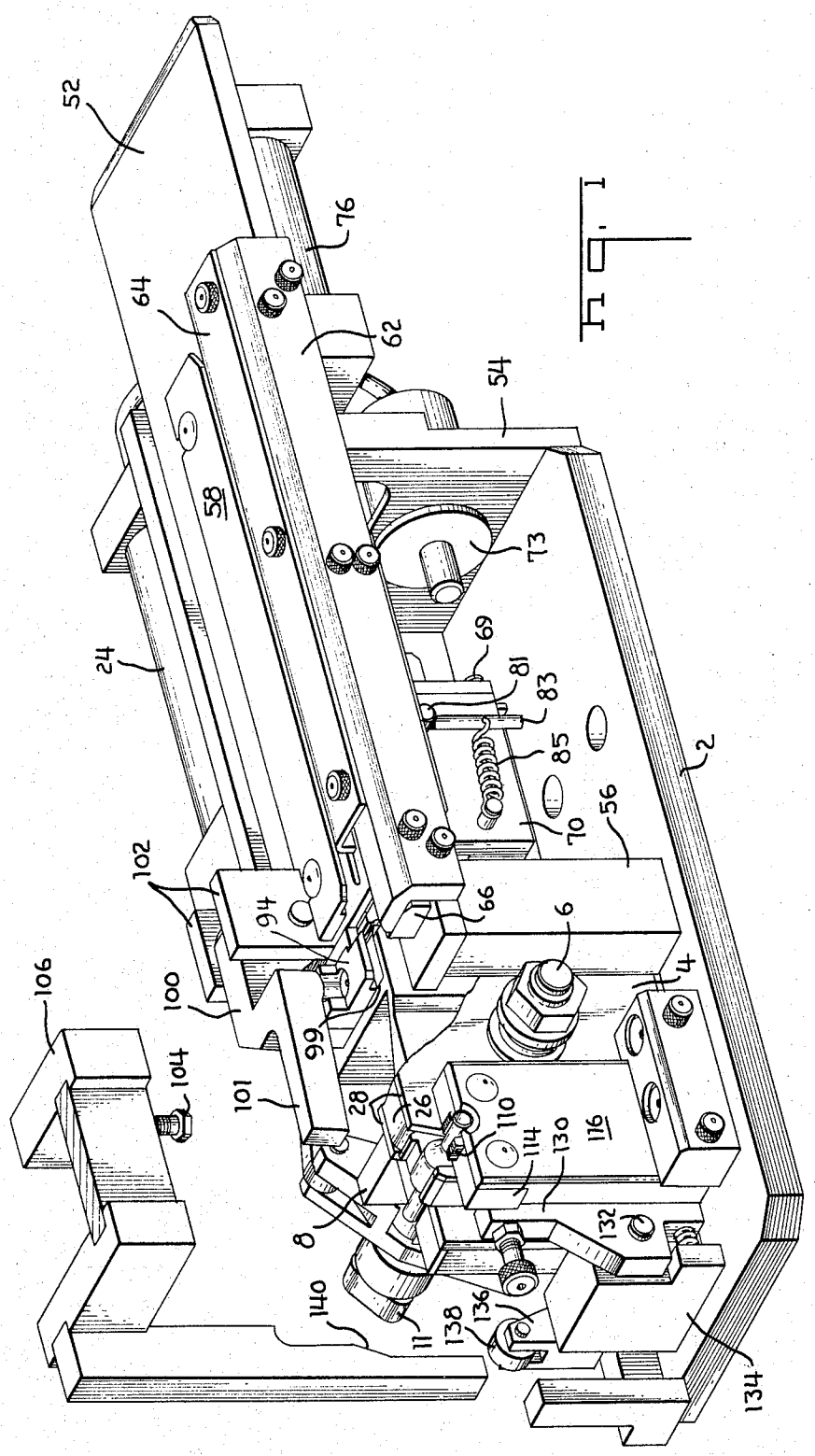

FIG. 1

TERMINAL APPLICATOR

Filed March 19, 1965 6 Sheets-Sheet 2

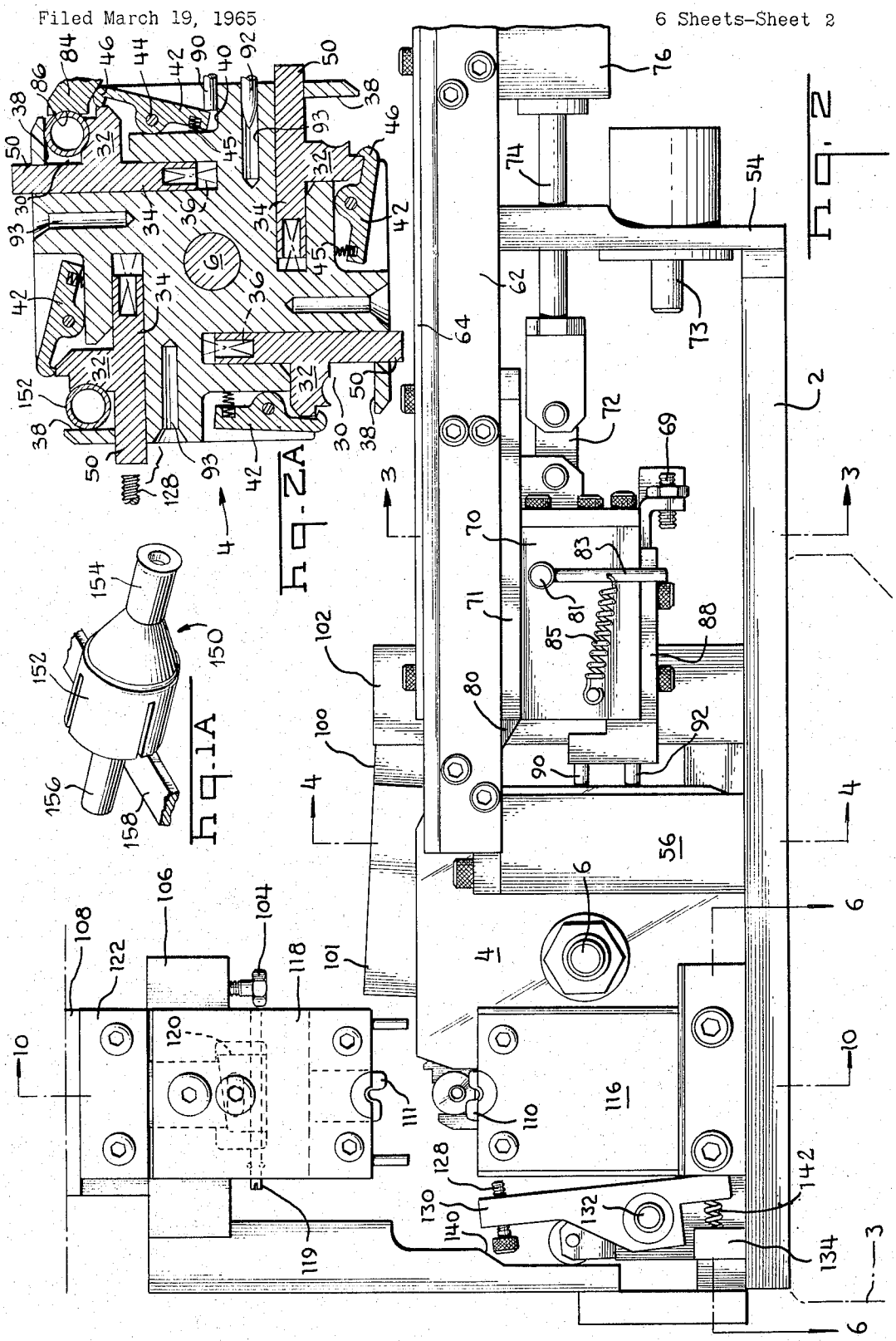

TERMINAL APPLICATOR

Filed March 19, 1965 6 Sheets-Sheet 3

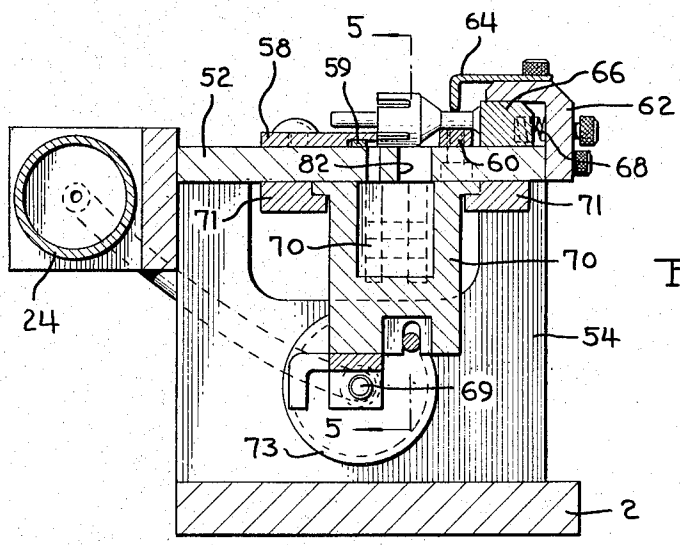

Fig. 3

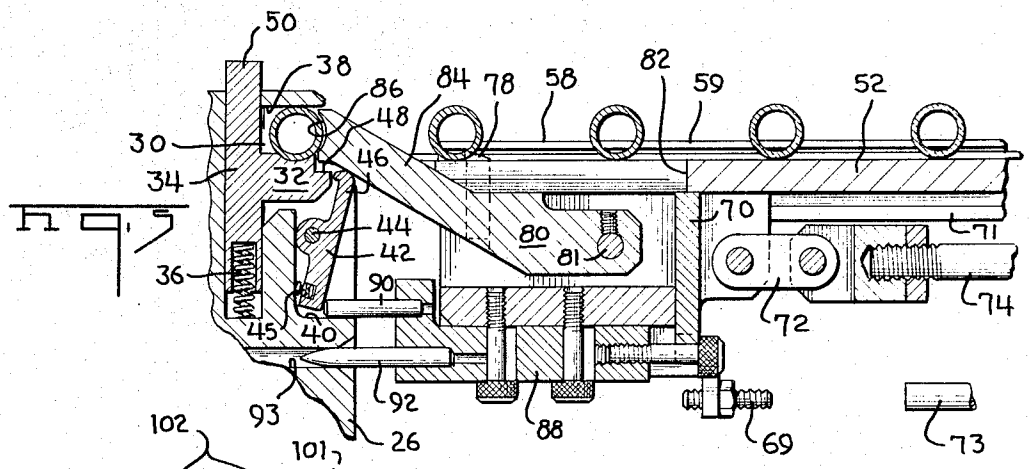

Fig. 5

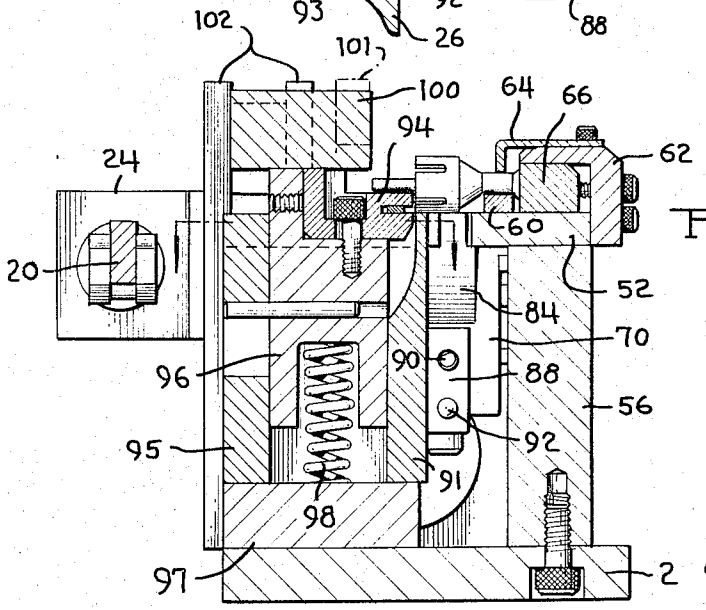

Fig. 4

INVENTOR.
DAVID RONALD KERNS
BY PAUL ELWOOD MARTZ

Curtis, Morris & Safford

TERMINAL APPLICATOR

Filed March 19, 1965 6 Sheets-Sheet 4

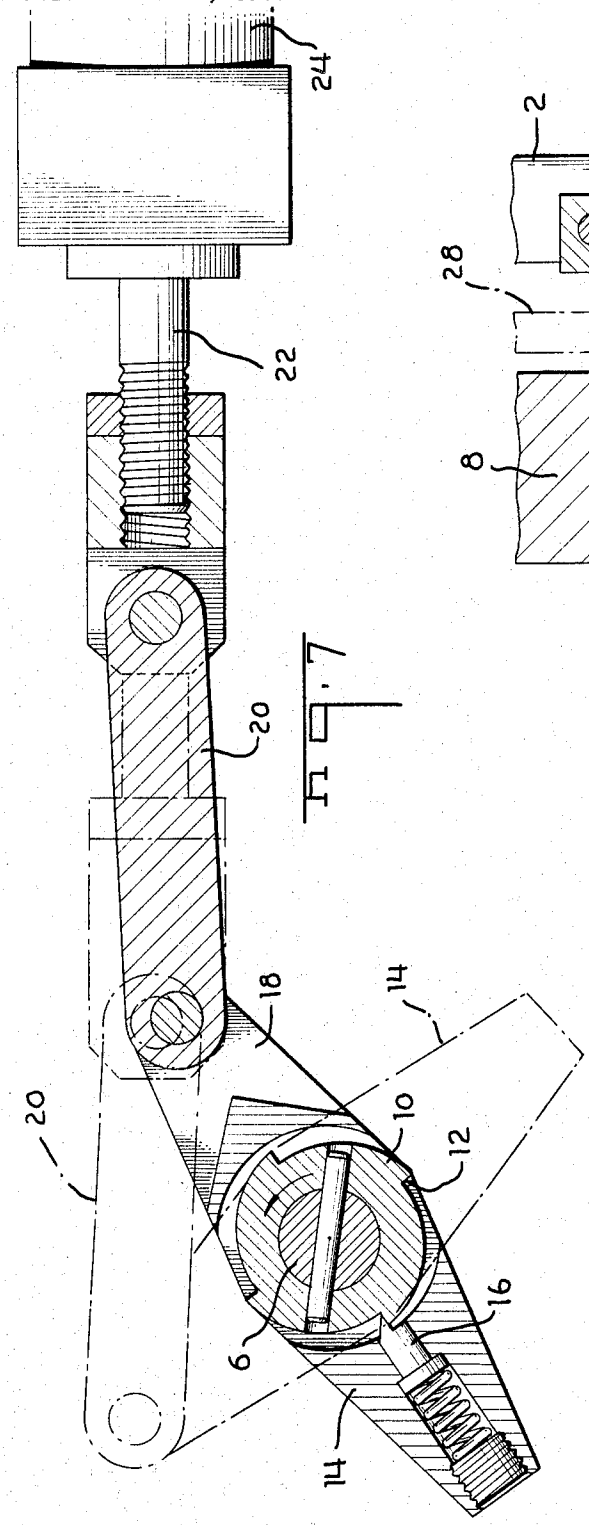

FIG. 7

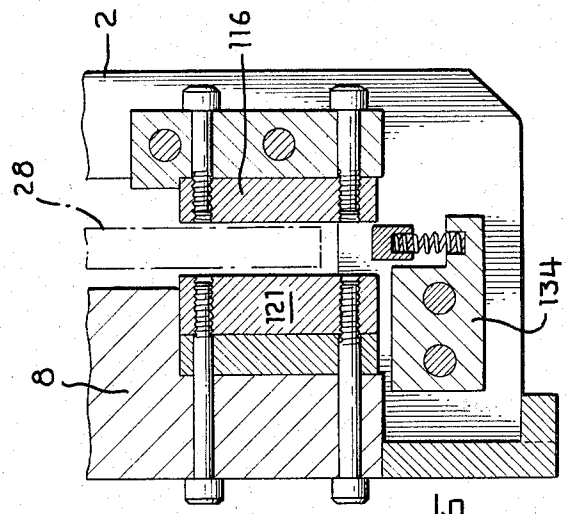

FIG. 6

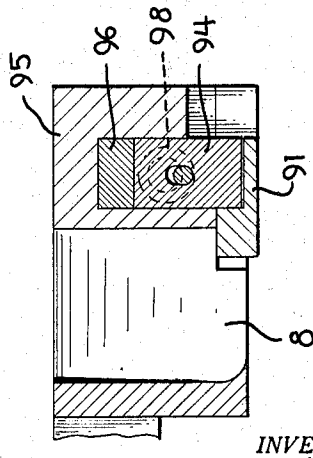

FIG. 11

INVENTOR.
DAVID RONALD KERNS
PAUL ELWOOD MARTZ
Curtis, Morris & Safford

TERMINAL APPLICATOR

Filed March 19, 1965 6 Sheets-Sheet 5

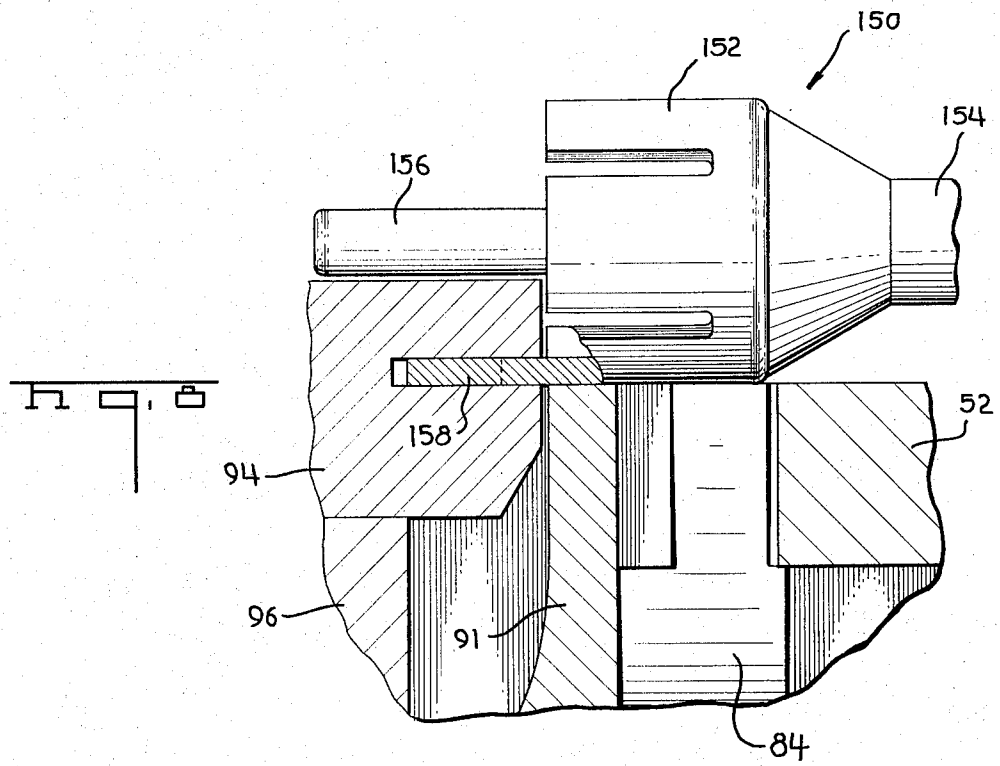

Fig. 8

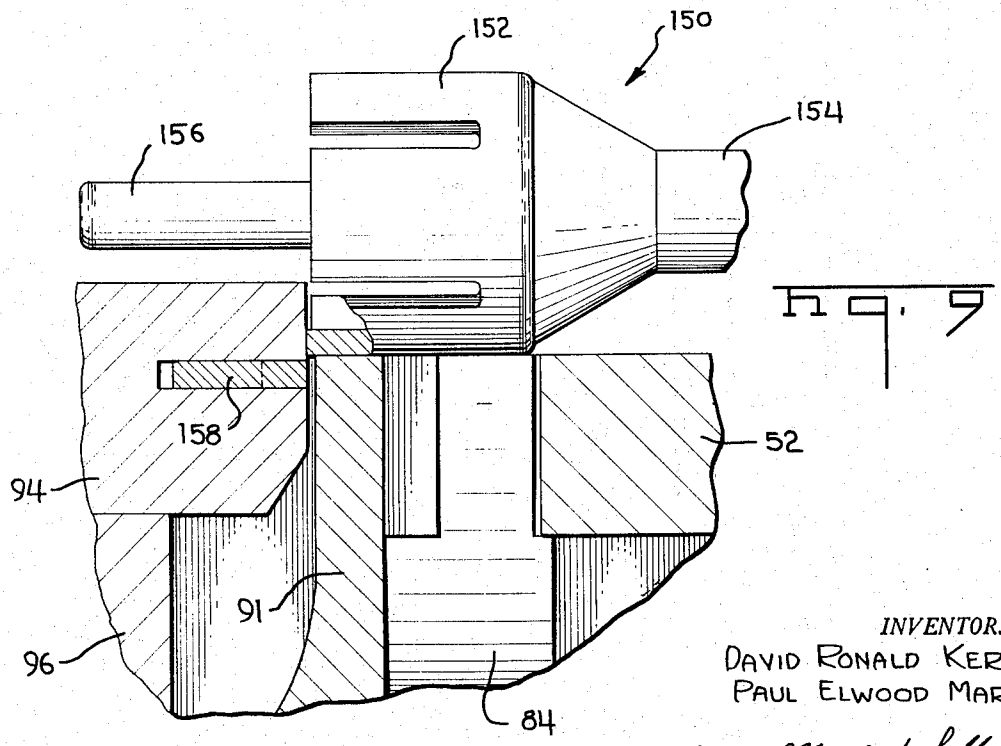

Fig. 9

INVENTOR.
DAVID RONALD KERNS
PAUL ELWOOD MARTZ
Curtis, Morris & Safford

Fig. 10

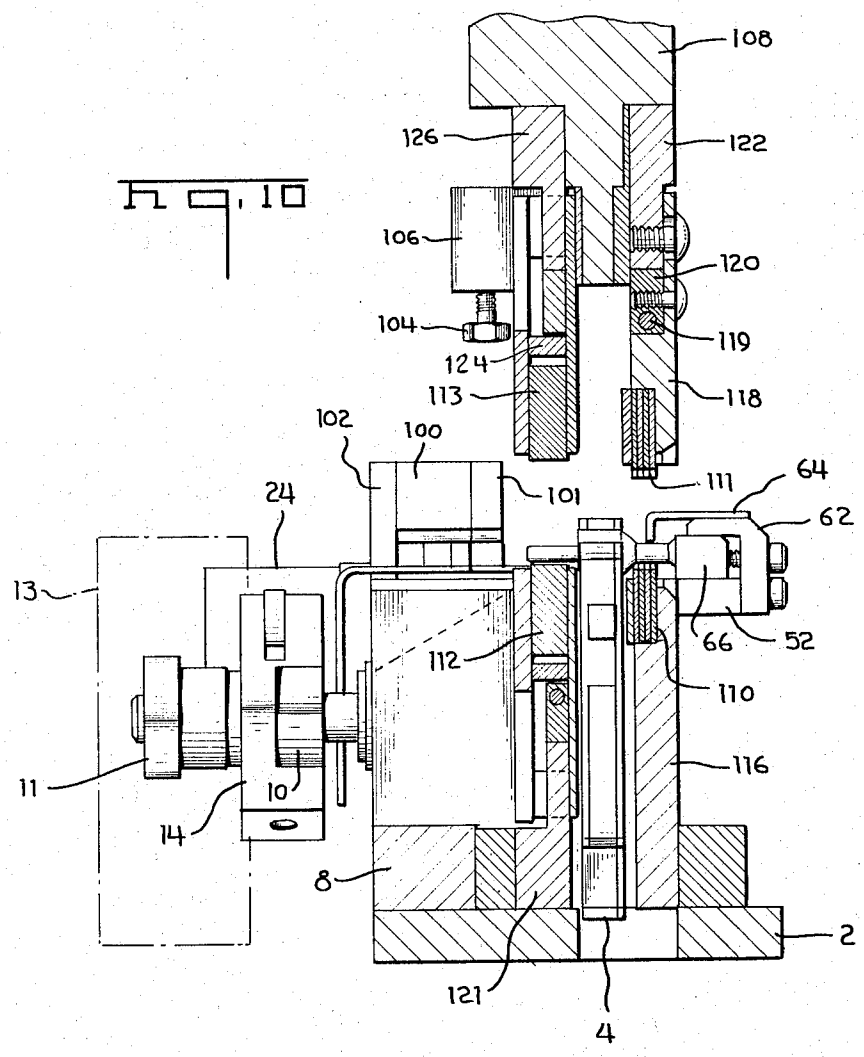

INVENTOR.
DAVID RONALD KERNS
PAUL ELWOOD MARTZ
Curtis, Morris & Safford

United States Patent Office

3,359,780

Patented Dec. 26, 1967

1

3,359,780
TERMINAL APPLICATOR

David Ronald Kerns and Paul Elwood Martz, Harrisburg, Pa., assignors to AMP Incorporated, Harrisburg, Pa.

Filed Mar. 19, 1965, Ser. No. 441,225
4 Claims. (Cl. 72—421)

ABSTRACT OF THE DISCLOSURE

Electrical terminal applicator for crimping ladder strip terminals onto wires has indexible plate located adjacent to crimping dies. Ladder strip is fed towards one corner of plate and leading terminal is severed from strip and loaded onto gripping device on corner of the plate. During cycle, plate is indexed 90° so that uncrimped terminal held by plate is located between crimping dies. During crimping, gripping device on the plate corner is opened by camming means to release crimped termination.

This invention relates to applicators for crimping electrical terminals or connectors in strip form onto the ends of wires.

It is an object of the invention to provide an improved applicator for electrical terminals in strip form. A further object is to provide an applicator particularly intended to apply terminals in ladder strip form in which each terminal extends laterally beyond the carrier strip. A further object is to provide an applicator for terminals in ladder strip form having means for removing the leading terminal from the strip at one station and means for transferring the leading terminal to a crimping station where it is crimped onto a wire end. It is a further object of the invention to provide an applicator which is adapted to crimp a terminal or connecting device at both of its ends onto a wire.

These and other objects of the invention are achieved in a preferred embodiment thereof in which the applicator comprises a crimping station, a severing station for severing the leading terminal from the strip, and an indexable transfer device for transferring the severed terminal to the crimping station. The transfer device comprises a square plate having means adjacent to each of its corners for gripping a terminal. The terminal strip is fed towards the transfer plate to position the leading terminal in one of the gripping means of the transfer plate and the severing means is disposed beside the transfer plate at a location such that a fed terminal can be severed from the strip after it has been clamped in the gripping means of the transfer device. After indexing of the transfer device and movement of the severed terminal to the crimping station, the terminal disposed at that station is held by the transfer device in alignment with the crimping dies. During crimping, the transfer device releases the terminal so that it can be removed from the applicator after it has been crimped onto a wire.

In the drawing:

FIGURE 1 is a perspective view of a preferred embodiment of an applicator in accordance with the invention;

FIGURE 1A is a perspective view of a short section of terminal strip of a type which the applicator of FIGURE 1 is intended to apply to wire ends;

FIGURE 2 is a front view of the applicator of FIGURE 1;

FIGURE 2A is a sectional front view of the transfer plate of the disclosed embodiment;

FIGURES 3 and 4 are views taken along the lines 3—3 and 4—4 of FIGURE 2;

FIGURE 5 is a sectional view taken along the lines 5—5 of FIGURE 3;

2

FIGURE 6 is a view taken along the lines 6—6 of FIGURE 2;

FIGURE 7 is a sectional fragmentary view showing the indexing mechanism for the transfer plate;

FIGURES 8 and 9 are fragmentary views on an enlarged scale illustrating the operation of the severing means for severing of the terminals from the strip;

FIGURE 10 is a view taken along the lines 10—10 of FIGURE 2; and

FIGURE 11 is a view taken along the lines 11—11 of FIGURE 4.

Referring first to FIGURE 1A, the disclosed embodiment of the invention is adapted to apply terminals **150** onto the ends of shielded conductors. The terminals **150** each comprise an intermediate hood portion **152** from which a ferrule or crimp portion **154** extends, this crimp portion being adapted to be crimped onto the shielding braid of a shielded conductor. A conductive pin **156** is co-axially mounted within the hood portion **152** and electrically insulated therefrom by a suitable spacer, this pin being adapted to be crimped onto the central conductor of the shielded conductor. The terminals **150** are manufactured in side-by-side strip form with the hood portion **152** of each terminal being integral with a carrier strip **158** as shown best in FIGURE 8. It should be noted that the terminals project laterally beyond the carrier strip on both sides, a condition which is not ordinarily encountered with terminals in ladder strip form.

Referring now to FIGURES 1 and 2, the disclosed embodiment of the invention comprises a base plate **2** which is adapted to be mounted on the bed or platen **3** of a press. A transfer plate generally indicated at **4** is mounted above the base plate and adjacent to the left-hand end thereof, as viewed in the drawing, by means of a shaft **6** to which it is secured for rotation therewith. This shaft extends through the transfer plate **4**, through a bearing in a block **8** mounted behind the transfer plate, see FIGURE 10, and has a ratchet wheel **10** pinned or otherwise secured to its rearward end as shown in FIGURE 7. Ratchet wheel **10** has four teeth **12** located at equally spaced intervals on its periphery for engagement by a ratchet pawl **16** which is contained in a lever **14** and which is spring biased towards the surface of the ratchet wheel **10**. Lever **14** is rotatably mounted on the shaft **6** and has a bifurcated arm **18** which is pivotally connected to a link **20**. This link, in turn, is pivotally connected to the end of a piston rod **22** of a pneumatic piston-cylinder **24**. It will be understood that upon leftward movement of the piston rod **22** from the piston of FIGURE 7, the shaft **6** will be rotated through an angle of 90° in a counterclockwise direction and that the transfer device **4** will be indexed by the same amount.

A four lobe cam **11** is mounted on shaft **6** behind the ratchet wheel **10**. This cam closes a small switch **13** after indexing of the transfer plate to admit compressed air to the right-hand side of a cylinder **76** which controls the feeding of the strip as described below.

The transfer plate **4** is of the general type disclosed and claimed in application Ser. No. 423,565, filed Jan. 5, 1965, now Patent No. 3,329,002, by Glendon H. Schwalm, and comprises a relatively thick center plate **26** and a pair of face plates **28** on each side of the center plate. As shown in FIGURES 2A and 5, notches **30** extend through the plates **26**, **28** adjacent to each of the corners thereof, the width of these notches being sufficient to accommodate the hood portion **152** of one of the terminals **150**. The combined thickness of the plates **26**, **28** is such that when a terminal is gripped in one of the notches, the pin portion **156** of the terminal will project rearwardly while the crimp portion **154** will project

forwardly to permit simultaneous crimping of both ends of the terminal as will be explained more fully below.

The terminals are clamped in the notches by means of clamping dogs **32** each of which has a base portion **34** slidably contained in a suitable recess in the center plate **30**, see FIGURE 5. The base portion of each dog is resiliently biased by a spring **36** in a manner such that the dog is urged towards the side **38** of the notch **30** and the length of the base portion of each dog is such that its end **50** projects beyond the upper side (as viewed in FIGURE 5) of the plate when a terminal is clamped in the notch.

The clamping dog **32** can be held in its retracted position against the biasing force of the spring **36** by means of a latch **42** pivoted intermediate its ends at **44** in a recess **40** adjacent to the notch **30**. Each of these latches has a hooked end **46** for engagement with a shoulder **48** of the associated clamping dog and each latch is resiliently biased by a spring **45** in a counterclockwise direction, again as viewed in FIGURE 5, so that its hooked end will be retained against the shoulder to hold the clamping dog in its retracted positon. The clamping dog can be released by merely pressing on the lower end of the latch **42** as illustrated in FIGURE 5.

The terminal strip is fed from a reel (not specifically shown) over the surface of a platform **52** mounted above the surface of the plate **2** by suitable support plates **54**, **56**. The feed path for the terminal strip is defined by guide bars, one of which **58** is mounted between the sides of the platform **52** and extends towards the loading station. Guide bar **58** has a laterally extending flange **59** which is adapted to extend over the carrier strip **158**, see FIGURE 3. The right-hand side of the strip as viewed in FIGURE 3 is guided over the surface of the platform by a bar **60** also secured to the upper surface of plate **52**. The rearward ends of the crimp portions **154** of the terminals bear against a spring biased aligning bar **66**. This aligning bar is held in position on the platform **52** by means of an elongated bracket **62**, the springs **68** being interposed between the opposed sides of the bar **66** and the bracket **62** to bias the bar leftwardly in FIGURE 3. The terminal strip is also guided along its set path by means of a flanged plate **64** secured to the upper side of the bracket **62** in a manner such that the depending flanged portion of the plate bears against the crimp portions **154** of the terminals and holds these portions of the terminals against the surface of the previously identified bar **60**.

The terminal strip is fed towards the loading station by a reciprocable feed slide **70** on the underside of the platform **52**. This feed slide is guided along its path of reciprocation by suitable gibs **71** and is connected by means of a link **72** to the end of a piston rod **74** of a double acting pneumatic piston-cylinder **76**. The terminal strip is pushed by a lever **80** pivoted to the slide **70** on a pin **81**. Lever **80** has an upwardly extending finger **78** which projects through a suitable slot of the plate **52** and which engages the terminal strip immediately in front of the hood portion **152** of the second terminal from the end of the strip. In addition, the lever **80** has an obliquely extending arm **84** having a concave end **86** which is adapted to engage the hood portion of the leading terminal of the strip which is being fed to the transfer device. It should be mentioned that if the terminal being fed extends perfectly normally of the carrier strip, that is, if it is not misaligned in any way, the end **86** of the arm **84** will not engage the hood portion of the terminal and feeding will take place by the pushing effect of the finger **78**. If, however, the terminal should be slightly misaligned, that is, if it should extend slightly obliquely with respect to the carrier strip, the arm **84** will engage the terminal and straighten it with respect to the carrier strip.

The pin **81** extends through the slide **70** and has a laterally extending lever **83** secured to its projecting end as shown in FIGURE 1. A spring **85** extends between the lower end of the lever and a fixed pin in the face plate of the slide **70** thereby to bias the pin **81** in a clockwise direction as viewed in FIGURES 1 and 5 while permitting counterclockwise movement of the pin so that the feed slide **70**, the feed finger **78** and the arm **84** can be moved rightwardly in FIGURE 5 and beneath the leading terminal of the strip. When the feed slide **70** moves rightwardly from the position of FIGURE 1, a screw **69** on its lower side engages a manual valve **73** in plate **54** which controls the supply of compressed air to the cylinder **24**.

A bracket **88** (FIGURE 5) is secured by suitable fasteners to the underside of the feed slide **70** and has a pair of pins **90**, **92** extending from its left-hand or forward end. The pin **90** is adapted to engage the lower end of the latch lever **42** disposed at the loading station thereby to release the clamping dog **32** concomitantly with feeding of a terminal into the notch of the transfer plate. The pin **92** is adapted to enter a drilled hole **93** in plate **26** adjacent to the recess **40** thereby to precisely position the transfer plate relative to the strip and to lock the transfer plate in a precisely predetermined position during crimping of the terminal disposed in the crimping station.

The terminal which has been fed into the notch disposed in the loading station is severed from the carrier strip **158** by means of a severing block **94** (FIGURE 4) which cooperates with a fixed severing block **91** on a support block **97**. The shearing member **94** is secured to the upper side of a floating block **96** which is biased upwardly by a spring **98** and which is contained between the block **91** and a plate **95** on the rearward side of the floating block **96**. Upward movement of the block **96** is limited by means of a pin which is mounted in block **96** and extends into a slot in plate **95**. The upper end of the floating block and the end of the shearing plate **94** are depressed by means of a lever **100** pivotally mounted between a pair of upstanding plates **102** disposed rightwardly and rearwardly (as viewed in FIGURE 1) of the floating block **96**. The lever **100** has an extension **101** which is adapted to be engaged by a screw **104** depending from a frame **106** mounted on the press ram, the arrangement being such that upon downward movement of the ram, the lever **100** is moved downwardly about its pivotal axis thereby to depress the floating block **96** and the shearing blade **94** relative to the block **100** as shown in FIGURES 8 and 9.

The crimping station comprises two sets of crimping dies, one set being disposed on each side of transfer plate **4**. Thus, a fixed crimping die **110** is mounted in a plate **114** secured in turn in a plate **116** in front of the transfer plate **4**. This fixed crimping die cooperates with a movable crimping die **111** (see FIGURE 10) on the lower end of a plate **118**. The plate **118** bears against a wedge plate **120** which in turn bears against a plate **122** secured to ram **108**, the arrangement being such that the movable die **111** can be adjusted by turning the screw **119**. It should be noted that the dies **110**, **111** comprise a plurality of relative thin plates as generally disclosed in U.S. Patent 2,639,754. The fixed crimping die **112** for crimping the pin portion of the terminal is disposed behind the transfer plate on a suitable mounting block **121** and the cooperating movable die **113** is mounted on the lower end of a mounting block **126** to the ram **108**. Again, a wedge-type adjustment indicated at **124** is provided to adjust the portion of the die **113** relative to the ram. The dies **112**, **113** are of a general type disclosed in U.S. Patent 2,921,618 and comprise a plurality of indentors which are cammed through a suitable housing block.

Immediately after indexing of the transfer plate, the terminal which has been delivered to the crimping station is held by the transfer mechanism with its ends **154**, **156** located in the fixed crimping dies of the two die sets. After the operator has inserted the wire, and before the movable dies have bottomed with respect to the fixed dies, it is desirable to release the terminal from the transfer

device in order that it might be permitted to shift its position when the dies bottom. Release of the terminal at the time of crimping is accomplished by a camming bar **140** depending from the mounting frame **106** which engages a cam roller **138** on the end of the lever **136**. This lever is secured to a shaft **132** which extends through a block **134** and a second lever **130** is mounted on the projecting end of the shaft. A screw **128** is threaded through the upper end of the lever **130** for engagement with the projecting portion **50** of the clamping dog disposed in the crimping station. The lever **130** is normally biased in a counterclockwise direction as viewed in FIGURE 1 by a spring **142** which acts between the lower end of the lever and a surface of the block **134**.

Upon downward movement of the ram, the shaft **132** is thus swung through a slight clockwise arc by the camming bar **140** thereby to move the end of the screw **128** against the projecting portion of the clamping dog and release the terminal being crimped from clamped engagement with the notch in which it is positioned. When the clamping dog is moved inwardly, the latching mechanism **42** automatically engages the dog and holds it in its opened position until it moves to the loading station at which time it is closed into engagement with the fed terminal as previously described.

The parts are normally in the positions of FIGURES 1 and 2 with the press ram in its raised position, with a severed terminal clamped in the transfer plate at the crimping station, and with a previously fed terminal clamped in the transferring device at the loading station. This previously fed terminal at the loading station will not have been severed from the strip.

During an operating cycle, the operator inserts the stripped end of a shielded conductor into the terminal at the crimping station in a manner such that the central conductor extends into the pin portion of the terminal and the shielding braid is received in the ferrule portion **154**. He then actuates the press to send the ram through a complete cycle, usually by pressing a suitable foot switch. Upon downward movement of the ram, the terminal clamped in the transferring device at the crimping station is released therefrom when the camming bar **140** engages the roller **138** in the upper end of the lever **136**. Also during downward movement of the ram, the screw **104** engages the lever **101** to depress the shear block. Depression of the shear block **94** has the effect of severing the terminal from the ladder strip as shown in FIGURES 8 and 9 and the further effect of severing the carrier strip **158**. The actual location at which the carrier strip is severed is indicated in FIGURE 1 at **99**. The severed short section of the carrier strip falls down the inclined surface of block **8**. When the ram reaches its bottom dead center portion, the terminal is crimped onto the wire and the ram returns to its raised position. The feed slide is actuated by a suitable switch on the press ram or fly wheel which supplies compressed air to the forward end of the piston-cylinder **76** thereby causing rightward movement of the feed slide from the positions of FIGURES 1 and 2. This retraction of the feed slide preferably takes place after the press ram has passed through its bottom dead center portion and while it is returning to its raised position. Upon rearward movement of the feed slide, its right-hand end engages the manual valve **73** in the plate **54** thereby supplying compressed air to the right-hand side of the cylinder **24** and causing leftward movement of the piston rod **22** and counterclockwise movement of the lever **14**. Such movement of the lever **14** results in indexing of the transfer plate through an angle of 90° so that the previously severed terminal is moved to the crimping station preparatory to the next operating cycle.

At the time of indexing, the cam **11** closes the switch **13** which, in turn, controls a solenoid valve for the cylinder **76**. This solenoid valve admits compressed air to the right-hand side of cylinder **76** causing the piston rod **74** to move leftwardly to the position of FIGURE 5 to

advance the terminal strip. The piston-cylinder **24** can be of the single-acting spring-return type so that after indexing (as shown in phantom in FIGURE 7) the piston rod and lever **14** will be returned to the solid line positions of FIGURE 7 under the influence of the spring in the cylinder.

Changes in construction will occur to those skilled in the art and various apparently different modifications and embodiments may be made without departing from the scope of the invention. The matter set forth in the foregoing description and accompanying drawings is offered by way of illustration only. The actual scope of the invention is intended to be defined in the following claims when viewed in their proper perspective against the prior art.

We claim:

1. An electrical terminal applicator for applying terminals onto the ends of wires, said terminals being in side-by-side strip form with each terminal being integral with a carrier strip and extending laterally on each side of said carrier strip, said applicator comprising, a square transfer plate having a notch adjacent to each of its corners, latch means in each of said notches for latching a terminal therein, a loading station for loading terminals in said transfer plate and a crimping station, means for feeding said strip towards said loading station to position the leading terminal of said strip in the notch disposed at said loading station with said carrier strip extending beside said plate, shearing means beside said loading station for shearing said leading terminal from said strip, a crimping station comprising two crimping die sets, said die sets being disposed on opposite sides of said plate at said crimping station, means for indexing said plate thereby to transfer said leading terminal from said loading station to said crimping station, and means for substantially simultaneously closing said latch means at said loading station, actuating said severing means, opening said latch means at said crimping station, and actuating said crimping die sets to crimp the ends of the terminal at said crimping station onto a wire.

2. An electrical terminal applicator for applying terminals onto the ends of wires, said terminals being in side-by-side strip form with each terminal being integral with a carrier strip and extending laterally on each side of said carrier strip, said apparatus comprising, a square transfer plate having a notch adjacent to each of its corners, gripping means in each of said notches for gripping a terminal intermediate its ends, a loading station and a crimping station, means for feeding a strip of said terminals towards said loading station to position the leading terminal of said strip in the notch disposed at said loading station with its axis extending normally of the plane of said plate and with adjacent portions of said carrier strip disposed beside said plate, shearing means disposed at said loading station and beside said plate for shearing said leading terminal from said strip upon placement of said leading terminal in said notch, first and second crimping die sets disposed on opposite sides of said plate at said crimping station, said die sets being adapted to crimp the ends of a terminal onto a wire, each of said die sets comprising a fixed die disposed beside the notch at said crimping station and a movable die, means for sequentially moving said movable dies relatively towards said fixed dies, for actuating shearing means, for indexing said plate and for actuating said shearing means whereby, the terminal in the said notch disposed at said crimping station is crimped onto a wire, the leading terminal in said notch at said loading station is severed from said strip, said leading terminal is transferred to said crimping station, and said strip is fed to position the next adjacent terminal of said strip in the notch disposed at said loading station.

3. Apparatus as set forth in claim **2** including means for engaging said gripping means at said loading station with the terminal fed into said notch at said loading station, and means for disengaging said gripping

means at said crimping station from the terminal at said crimping station concomitantly with crimping.

4. Apparatus for severing contact devices and crimping the severed contact device onto a wire comprising a transfer plate rotatable in its own plane, a recess adjacent to each of the corners of said plate, a loading station and a crimping station, means for feeding said strip towards said loading station to position said leading contact in the recess disposed at said loading station, a shearing means disposed beside said loading station for shearing said leading contact from said strip concomitantly with loading, a set of fixed crimping dies on each side of said plate at said crimping station, a press ram, movable crimping dies on said ram cooperable with said

fixed dies, and means responsive to movement of said ram for actuating said shearing means during movement of said movable dies towards said fixed dies and for indexing said transfer plate after crimping of a terminal at said crimping station onto a wire.

References Cited

UNITED STATES PATENTS

2,876,452	3/1959	Herman et al.	72—421
3,071,174	1/1963	Kerns	29—203

CHARLES W. LANHAM, *Primary Examiner.*

E. SUTTON, *Assistant Examiner.*