H. H. SCHROYER.

CAR DIAPHRAGM CONSTRUCTION.

APPLICATION FILED MAR. 21, 1914.

1,151,725.

Patented Aug. 31, 1915.

2 SHEETS—SHEET 1.

Fig. 1

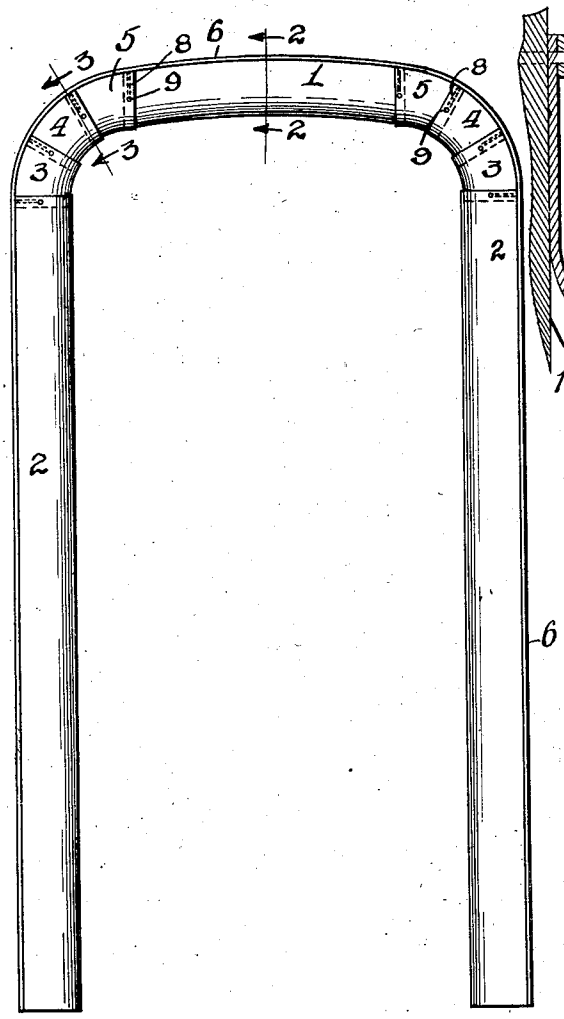

Fig. 2

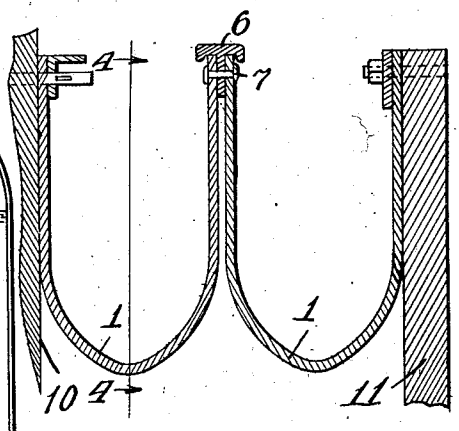

Fig. 3

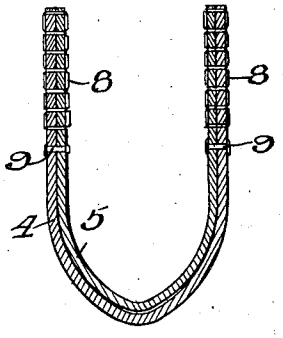

Witnesses

J. W. Angell

Frank H. Hudson.

by

Inventor

Harry H. Schroyer

Charles W. Hill

Atty.

H. H. SCHROYER.

CAR DIAPHRAGM CONSTRUCTION.

APPLICATION FILED MAR. 21, 1914.

1,151,725.

Patented Aug. 31, 1915.

2 SHEETS—SHEET 2.

Fig. 4

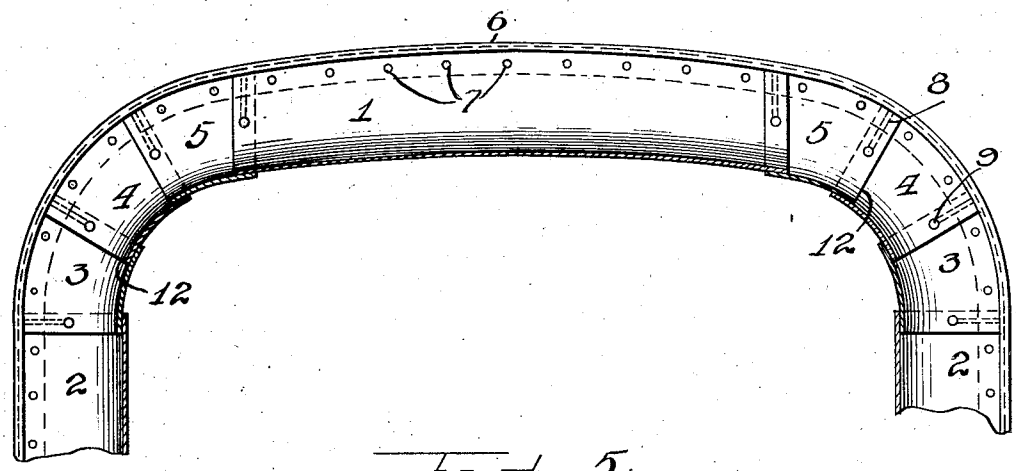

Fig. 5

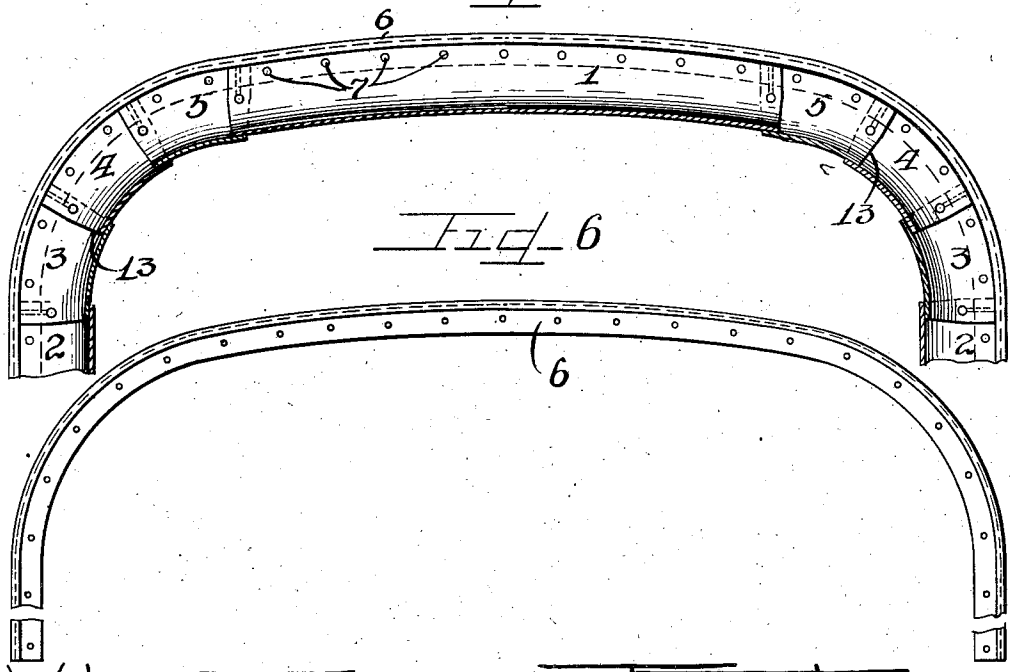

Fig. 6

Witnesses

J. W. Angell

Frank A. Hudson

Inventor

Harry H. Schroyer

by Charles A. Hill Atty.

UNITED STATES PATENT OFFICE.

HARRY H. SCHROYER, OF CHICAGO, ILLINOIS, ASSIGNOR TO THE ACME SUPPLY COMPANY, A CORPORATION OF ILLINOIS.

CAR-DIAPHRAGM CONSTRUCTION.

1,151,725. Specification of Letters Patent. Patented Aug. 31, 1915.

Application filed March 21, 1914. Serial No. 826,157.

To all whom it may concern:

Be it known that I, HARRY H. SCHROYER, a citizen of the United States, and a resident of the city of Chicago, in the county of Cook and State of Illinois, have invented certain new and useful Improvements in Car-Diaphragm Constructions; and I do hereby declare that the following is a full, clear, and exact description of the same, reference being had to the accompanying drawings, and to the numerals of reference marked thereon, which form a part of this specification.

In the past great difficulty has been experienced in constructing diaphragms which are easily extended without causing a wrinkling or warping of the diaphragm fabric, particularly at the shoulders of the arched portions. Then, too, it has been found difficult in constructions where the tops of the sections are of U-form, to properly connect the margins of adjacent sections one to another to afford not only the requisite stiffness, but also a tight joint entirely weatherproof.

This invention relates to a diaphragm construction wherein an exceedingly strong and rigid connection is provided between adjacent sections, and wherein the shoulder pieces are connected in overlapping relation without a positive connection at their inner point, or point of greatest curvature. This permits relative movement to take place between the pieces, so that extension and collapsing of the diaphragm is readily permitted without excessive wear or stress upon the fabric, or other destructive conditions operating to decrease the life of the diaphragm.

It is an object of this invention to construct a car diaphragm wherein the top arched portion is joined to the leg members by shoulder pieces arranged in overlapping relation on one another and connected only along the outer portions of said overlapping portions allowing relative movement to take place at the inner point of curvature therebetween.

It is also an object of this invention to construct a car vestibule diaphragm wherein the top and side members are connected to one another by overlapping shoulder pieces affording a continuous U-trough, and wherein a single integral metallic reinforcing member extends upwardly along the legs of the diaphragm and across the arched portions thereof at the junction between adjacent diaphragm sections.

It is also an object of this invention to construct a car vestibule diaphragm wherein adjacent sections are of continuous U-form, the top portions being joined to the side portions by overlapping shoulder pieces, said shoulder pieces being attached to one another only along certain portions thereof, permitting movement at other points of contact therebetween, facilitating the extending and collapsing of the diaphragm and without warping or undue wear upon the fabric.

It is also an object of this invention to construct a car diaphragm consisting of sections of U-form joined to one another by a metallic reinforcing member of T-section, acting to project over and protect the edges of the attached margins of said U-sections, reinforcing the diaphragm as a whole and efficiently supporting the same and affording a weather-proof connection therebetween.

It is furthermore an object of this invention to construct a diaphragm, the sections of which are composed of a plurality of pieces of fabric joined together to afford a continuous trough of U-form and in a manner to permit relative movement to take place between the fabric pieces.

It is finally an object of this invention to construct a car diaphragm by associating the various parts of the diaphragm section in a manner to insure long life and easy actuation of the diaphragm, greatly increasing the efficiency and durability thereof.

The invention (in a preferred form) is illustrated in the drawings and hereinafter more fully described.

In the drawings: Figure 1 is a front elevation of a diaphragm embodying the principles of my invention. Fig. 2 is a section taken on line 2—2 of Fig. 1. Fig. 3 is a section taken on line 3—3 of Fig. 1. Fig. 4 is a fragmentary section taken through the top of the diaphragm on line 4—4 of Fig. 2. Fig. 5 is a view similar to Fig. 4 when the diaphragm is extended, illustrating the decrease in depth of the curved diaphragm sections. Fig. 6 is a fragmentary elevation of the metal reinforcing member.

As shown in the drawings: The reference numeral 1, indicates the top piece of U-form, which, together with the leg pieces 2, also of

U-form, and the U-form shoulder pieces 3, 4, and 5, respectively, connecting said top and leg members together, form a section of the car diaphragm. The respective sections of the diaphragm are joined together along adjacent margins by means of a T-bar 6, the web of which is inserted between said margins, and the flanges of which extend over and around the edges of the respective sections to protect the same and prevent entrance of foreign matter through the joint therebetween. Rivets 7, are engaged in spaced relation through the margins of the joined sections and the web of said T-bar, entirely around the diaphragm, thus affording a rigid construction insuring the diaphragm maintaining its shape at all times.

At the points where the top section and shoulder pieces and leg members are connected together in overlapped relation the respective pieces of fabric are stitched together for a portion of the length of each, as denoted by the reference numeral 8, and below which a rivet 9, is engaged, but the innermost points or point of greatest curvature of said overlapping pieces of fabric are left free and unconnected to permit relative movement therebetween with the extension and collapsing of the diaphragm to obviate warping or wrinkling of the fabric. Of course, one end of the diaphragm may be connected upon a suitable frame 10, forming a part of the car end, and with the other end having secured thereto the vestibule frame 11, connected in any suitable manner to the diaphragm and adapted to be engaged to a similar frame on another car diaphragm when two cars are coupled together.

The operation is as follows: Fig. 4 illustrates a view of a section of the diaphragm when the diaphragm is not extended, and Fig. 5, illustrates a similar view of the same section when the diaphragm is extended. It will be noted that before the diaphragm is extended the lower portions of the respective overlapping pieces of fabric, particularly the edges 12, of each of the shoulder pieces, lie substantially in radial planes, due to the fact that they are of U-form and a part of an arch. When the diaphragm is extended, a restriction takes place whereby the edges are pulled or warped inwardly, as indicated by the reference numeral 13, in Fig. 5, with a consequent relative movement of the overlapping pieces of fabric. Owing to the fact that the stitching 8, does not extend entirely around the overlapped portions of the fabric, such relative movement between the lower portions thereof is permitted, and the resultant contraction taking place when the vestibule diaphragm is extended, does not wrinkle or warp the fabric with the damaging results that have heretofore accompanied such movement.

I am aware that various details of construction may be varied through a wide range without departing from the principles of this invention. I therefore do not purpose limiting the patent granted otherwise than necessitated by the prior art.

I claim as my invention:

1. In a diaphragm of the class described top and leg members, shoulder pieces joining the same one to another, with the respective members and pieces arranged in overlapping relation, and means securing the same together along the upper portion thereof permitting free movement between the point of greatest curvature of said members.

2. In a device of the class described top members, leg members connected thereto and shoulder pieces affording the connection between said top and leg members, said pieces and members arranged in overlapping relation with the upper portions thereof connected and the lower portions free to move with respect to one another.

3. In a diaphragm of the class described top and leg sections of U-form, means connecting the same together in a manner permitting relative movement to take place at the point of greatest curvature between said top and leg members and said means.

4. In a device of the class described top and leg members of U-form, shoulder pieces of U-form arranged in overlapping relation and connecting said top and leg members together, and stitching through said shoulder pieces and top and leg members for a part of the length thereof permitting relative movement to take place between the respective overlapping portions thereof.

5. In a device of the class described diaphragm sections of U-form, comprising a plurality of pieces of fabric, said pieces connected together for only a part of their length permitting relative movement to take place therebetween.

6. In a device of the class described diaphragm sections comprising a plurality of pieces of fabric arranged in overlapped relation, said respective pieces of fabric associated with another to permit relative movement to take place therebetween.

7. In a device of the class described a vestibule diaphragm comprising a plurality of sections, and a flanged unitary reinforcing member inserted between adjacent sections and extending entirely around the diaphragm to reinforce the same.

8. In a diaphragm of the class described a plurality of sections of U-form, a T-bar with its web inserted between adjacent sections and with the flanges of said T-bar projecting over the edges of said sections to protect the same, and means securing said T-bar to said respective sections.

9. In a device of the class described a

diaphragm comprising a plurality of sections, each section comprising a plurality of pieces of fabric, said pieces of fabric associated with one another in a manner to permit relative movement to take place therebetween, and a unitary reinforcing member extending entirely around the diaphragm between adjacent sections.

10. In a diaphragm of the class described a plurality of sections of U-form, each section comprising a plurality of pieces of fabric associated with one another to permit relative movement to take place therebetween, and a reinforcing member of T-section engaged between adjacent diaphragm sections and extending entirely around the diaphragm to reinforce the same and protect the edges of said diaphragm sections.

11. In a railway car diaphragm construction, the combination of a fabric diaphragm of the expansible and contractible accordion type composed of fabric-sections, and a stiffening bar substantially T-shape in cross-section at the junction of said sections, said bar having a portion between said sections to which the latter are fastened, and a portion overlying the edges of said sections, substantially as described.

12. In a railway car diaphragm construction, the combination of a fabric diaphragm of the expansible and contractible accordion type composed of fabric sections, and a stiffening bar substantially T-shape in cross section having its body interposed between the adjacent fabric sections of the diaphragm to which the latter are riveted, the head of the bar covering the joint between such fabric sections, substantially as described.

In testimony whereof I have hereunto subscribed my name in the presence of two subscribing witnesses.

HARRY H. SCHROYER.

Witnesses:

CHARLES W. HILLS, Jr.,

FRANK K. HUDSON.