July 13, 1943. E. W. KELLOGG 2,324,214

PHONOGRAPH APPARATUS

Filed Jan. 31, 1940

FIG. 1.

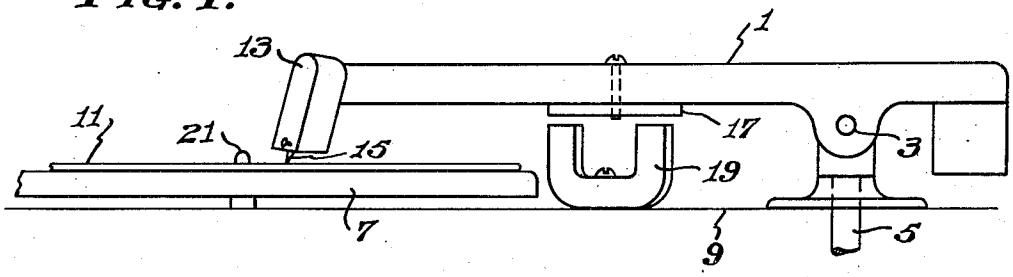

FIG. 2.

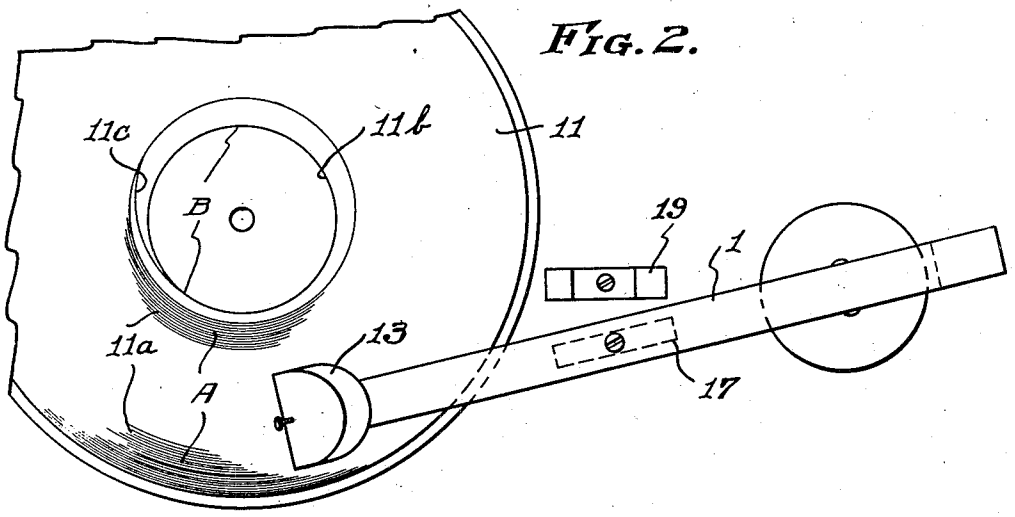

FIG. 3.

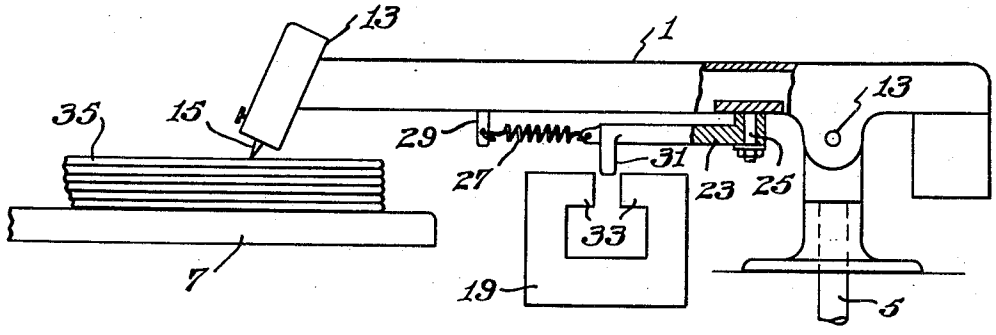

Inventor

Edward W. Kellogg

By

Attorney

Patented July 13, 1943 2,324,214

UNITED STATES PATENT OFFICE

2,324,214

PHONOGRAPH APPARATUS

Edward W. Kellogg, Moorestown, N. J., assignor to Radio Corporation of America, a corporation of Delaware

Application January 31, 1940, Serial No. 316,642

8 Claims. (Cl. 274—1)

This invention relates to phonograph apparatus, and more particularly to that portion of the apparatus which deals with the automatic stopping or record changing operation at the conclusion of playing of a record.

Modern trends in high fidelity sound reproducing systems of the type employing a grooved record in cooperation with a needle dictate that a light needle pressure shall be used for best results. When using such light pressure, there may be sufficient pressure to cause the needle to track the sound groove satisfactorily, but when the needle reaches the terminal groove of the record, which is employed to actuate a stop device or a trip device by means of which an automatic record changing cycle is initiated, it is found that there is insufficient pressure of the needle on the record to retain the needle in the terminal groove, and the needle may jump out of the terminal groove.

The primary object of my present invention is to provide improved control mechanism for phonographs of the type employing disc records in combination with a tracking needle which will not be subject to the aforementioned disadvantages.

More particularly, it is an object of my present invention to provide improved control mechanism for phonographs of the type set forth by means of which automatic stopping or record changing mechanisms may be satisfactorily operated while still retaining a light needle pressure in the sound groove.

Another object of my present invention is to provide improved control mechanism as aforesaid which may be applied readily to existing phonographs without substantial alteration thereof and without in any way impairing the operation thereof.

It is also an object of my present invention to provide improved control mechanism as aforesaid which is applicable to manually operated phonographs, as well as to phonographs of the automatic record changing type.

It is a further object of my present invention to provide improved control mechanism as aforesaid which is exceedingly simple in construction, very inexpensive in cost, and highly efficient in use.

In accordance with my present invention, I provide a pickup arm and mounting which will operate with a very light needle pressure (for example, 1 ounce) while the needle is in engagement with the sound groove. On the lower part of the pickup arm, I mount a piece of iron to act as an armature adapted to be attracted by a permanent magnet which may be mounted on the motor board in such a location that, when the pickup reaches the eccentric or other terminal groove of the record, the magnet pulls downwardly and provides increased needle pressure (for example, 3 ounces) sufficient to cause the needle to track in the terminal groove positively and to operate the control switch, stop mechanism, tripping mechanism, or the like. The magnet is mounted in such a location that, during the actual playing, it would not have any effect on the pickup arm, since the latter would not be over the magnet, but as soon as the pickup arm is in a position over the magnet, the latter becomes effective to constrain the pickup arm toward the record. It will be obvious, therefore, that both the sound groove and the terminal groove may be tracked by the needle with requisite pressure to accomplish the desired functions.

The novel features that I consider characteristic of my invention are set forth with particularity in the appended claims. The invention itself, however, both as to its organization and method of operation, as well as additional objects and advantages thereof, will best be understood from the following description of two embodiments thereof, when read in connection with the accompanying drawing, in which

Figure 1 is a side elevation of a manually operated phonograph showing one form of my invention applied thereto,

Figure 2 is a plan view thereof, and

Figure 3 is a side elevation of another form of my invention as applied to an automatic record changing phonograph.

Referring more particularly to the drawing, wherein similar reference numerals designate corresponding parts throughout, I have shown, in Figs. 1 and 2, a pickup or tone arm 1 mounted on a horizontal pin 3 for pivotal movement in a vertical plane and carried by a vertical pin or shaft 5 to permit swinging of the pickup arm 1 in a horizontal plane above a turntable 7 through a substantial arc. The turntable 7 and pickup arm 1 are both mounted on a suitable motor board or the like 9, the turntable 7 being adapted to support a conventional disc record 11 having a region A in which the sound groove 11a is formed and a region B at substantially the center, which is enclosed by a terminal groove 11b, the grooves 11a and 11b being connected by a connecting groove 11c. The pickup arm 1 carries a sound translating device 13 having a needle 15 which engages the grooves 11a, 11b, 11c in

the course of travel of the pickup arm 1 over record 11.

Mounted on the under side of the pickup arm 1 is a piece of iron 17 adapted to be attracted by a permanent magnet 19 which is mounted on the motor board 9 adjacent the turntable 7. The pickup arm 1 is free to swing on the pin 5 from a position entirely clear or to one side of the record 11 and turntable 7 to a position nearer the record centering pin 21 on the turntable 7 than the nearest part of the eccentric groove 11b, and the magnet 19 is so located in this arc that it has no effect on the armature 17 until the needle enters the connecting groove 11c. At this time, the magnet 11 pulls the armature 17 and the pickup arm 1 downwardly to increase the pressure between the needle 15 and the record 11, so that proper tracking of the terminal groove 11b by the needle 15 is insured. I have not attempted to show the tripping device for stopping the machine or for initiating the action of a record changer, since this is not part of my invention. Devices of this type are usually operated by some movement of the pickup arm executed while the needle is in the eccentric groove 11b, and they require an excess propelling force on the pickup arm than the mere playing of the sound record.

The modification of my invention just described is quite suitable for manually operated phonographs and even automatic record changing phonographs of the type wherein there is but one record on the turntable at a time. For automatic phonographs of either the type wherein the records are initially stacked upon the turntable and are removed therefrom one by one after each topmost record has been played, or the type wherein records are accumulated on the turntable for playing, I prefer to use an arrangement such as that shown in Fig. 3. In this modification, I pivotally mount a small lever 23 on a pin 25 carried by the pickup arm 1 so that the lever 23 may move horizontally with respect to the pickup arm 1, that is, in a plane parallel to the plane of movement of the pickup arm 1 on the pin 5. However, the lever 23 is arranged on the pin 25 to move with the pickup arm 1 in the vertical direction, that is, in a direction normal to the aforementioned plane. A spring 27 having one end thereof fixed to the free end of the lever 23 and its other end fixed to a downwardly extending pin 29 on the pickup arm 1 constantly tends to keep the lever 23 centered on the pickup arm 1.

In this modification of my invention, the armature 31 is constituted by a downwardly projecting rod of iron on the lever 23 in place of the bar 17 shown in the modification of Figs. 1 and 2, and it is adapted to ride in between the poles 33 of the magnet 19. The armature 31 is made of a length such that, regardless of the height of the stack of records 35 on the turntable 7, it will enter in between the pole pieces 33 and will be pulled downwardly thereby. However, since it enters the air gap between the pole pieces 33 sideways, there would be a sidewise pull on the pickup arm 1 and the needle 15 by the magnet 19 as soon as the needle 15 approaches sufficiently close to the terminal groove of the record for the magnet to become active. This would provide unnecessary side pressure on the wall of the record groove. It is to avoid this side pressure that I provide the lever 23 on the pickup arm 1. Thus, when the magnet 19 pulls sidewise on the armature 31, the arm 23 will swing on its pivot pin 24 and take up the sideward thrust. Then, when the armature 31 has entered between the pole pieces 33 a sufficient distance, the magnet 19 will exert a sudden downward pull on the armature 31 and will therefore pull the lever 23 and the pickup arm 1 and needle 15 down with it to increase the pressure of the needle on the record.

From the foregoing description, it will be apparent to those skilled in the art that I have provided a novel control mechanism by means of which it is possible to track the sound groove of a phonograph record with very light needle pressure and yet cause the needle to track the terminal groove with an increased pressure sufficiently great to effect actuation of the stopping mechanism, tripping mechanism, and the like. Although I have shown and described but two embodiments of my invention, I am fully aware that many modifications thereof are possible. For example, instead of mounting the armature 17 on the pick-up arm 1 and the magnet 19 on the motor board 9, the armature may be mounted on the motor board and the magnet on the pick-up arm. Also, in the modification of Fig. 3, the lever 31 may be pivotally mounted on the motor board to carry the magnet 19, if desired, and the armature 31 fixedly mounted on the pick-up arm 1. Other changes will, no doubt, readily suggest themselves to those skilled in the art. Accordingly, I desire it to be understood that I do not wish to be limited except insofar as is made necessary by the prior art and by the spirit of the appended claims.

I claim as my invention:

1. In a phonograph, the combination with a record support of a sound translating device movable relative to a record on said support, said device including a needle adapted to cooperate with said record, and said device maintaining a predetermined pressure between said record and said needle at one portion of said record, and means cooperatively associated with said device effective at a predetermined point in the travel of said device relative to said record to maintain a different pressure between said needle and said record.

2. In a phonograph, the combination with a record support of a sound translating device movable relative to a record on said support, said record having a sound groove and a terminal groove, said device including a needle adapted to cooperate with said record, and said device maintaining a predetermined pressure between said record and said needle while said needle is in said sound groove, and means cooperatively associated with said device effective when said needle is in said terminal groove to maintain a different pressure between said record and said needle.

3. In a phonograph, the combination with a record support of a sound translating device movable relative to a record on said support, said record having a sound groove thereon terminating in a terminal groove, said device including a needle adapted to cooperate with said record, and said device maintaining a relatively light pressure between said record and said needle while said needle is in said sound groove, and means cooperatively associated with said device effective when said needle reaches said terminal groove to increase the pressure between said record and said needle.

4. In a phonograph, the combination of a record support, a sound translating device including a needle adapted to cooperate with a record on said support, a pivotally mounted arm carry-

ing said device, said arm being mounted to swing in an arc over said record, and means effective over a portion of said arc to constrain said arm toward said record whereby to effect a relatively great pressure between said needle and said record, said means comprising a magnet extending over only a portion of said arc and an armature on said arm adapted to be attracted by said magnet.

5. In a phonograph, the combination with a record support of a sound translating device mounted to swing in an arc over a record on said support, said device including a needle adapted to cooperate with said record, and said device maintaining a predetermined pressure between said record and said needle at one portion of said record, and means cooperatively associated with said device effective over a predetermined portion of said arc to constrain said device toward said record whereby to effect a relatively greater pressure between said needle and said record.

6. In a phonograph, the combination of a turntable, a sound translating device including a needle adapted to cooperate with a record on said turntable, a pivotally mounted arm carrying said device, said arm being mounted to swing in an arc over said record to carry said device from a point clear of the edge thereof toward a region near the center thereof, and a pair of cooperating members comprising an armature and a magnet therefor, one of said members being carried by said arm and the other of said members being mounted near said turntable, said members being adapted to cooperate to draw said arm toward said record whereby to increase the needle pressure on said record, said other member being so mounted in relation to said arm as to effect said increased pressure when said device reaches said region.

7. In a phonograph, the combination of a turntable, a sound translating device including a needle adapted to cooperate with a record on said turntable, a pivotally mounted arm carrying said device, said arm being mounted to swing in an arc over said record to carry said device from a point clear of the edge thereof toward a region near the center thereof, an armature carried by said arm, and a magnet mounted near said turntable adapted to attract said armature to draw said arm toward said record whereby to increase the needle pressure on said record, said magnet being so mounted in relation to said arm as to be effective to attract said armature when said device reaches said region.

8. The invention set forth in claim 7 characterized by the addition of a lever pivotally mounted on said arm, said lever being movable relative to said arm in a plane parallel to that of said arm but being movable as a unit with said arm in a direction normal to said plane, and said armature being carried by said lever and extending downwardly therefrom.

EDWARD W. KELLOGG.