June 13, 1961 A. T. WALTER 2,988,419

PROCESS FOR SPINNING AND DRYING FIBERS OF A POLYMER CONTAINING A SIGNIFICANT AMOUNT OF ACRYLONITRILE POLYMERIZED THEREIN

Filed Jan. 18, 1957 2 Sheets-Sheet 1

Fig. 1.

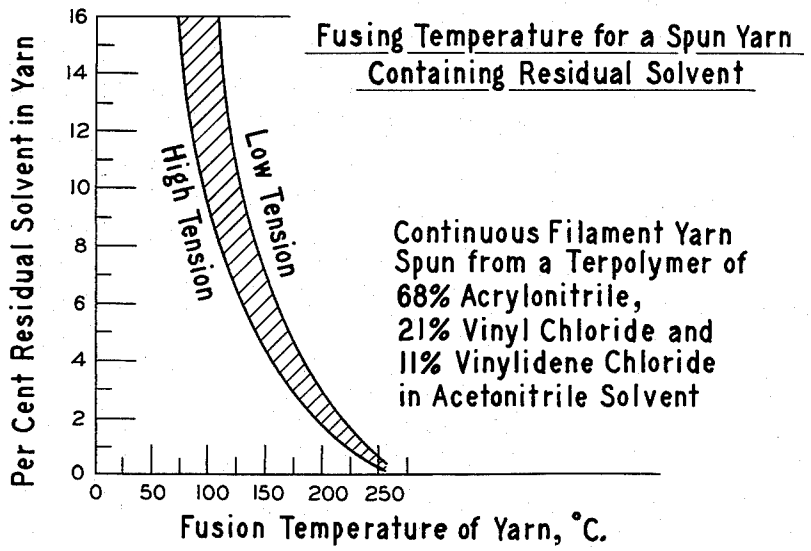

Fig. 2.

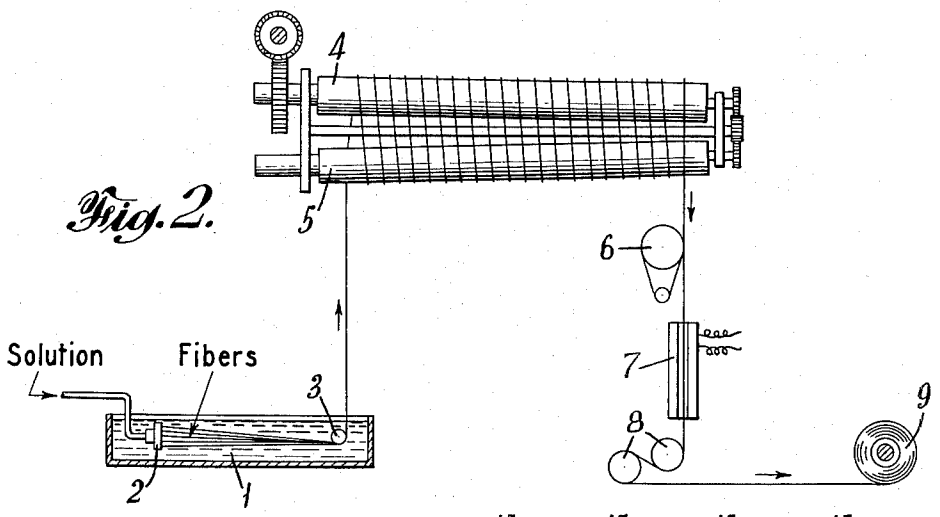

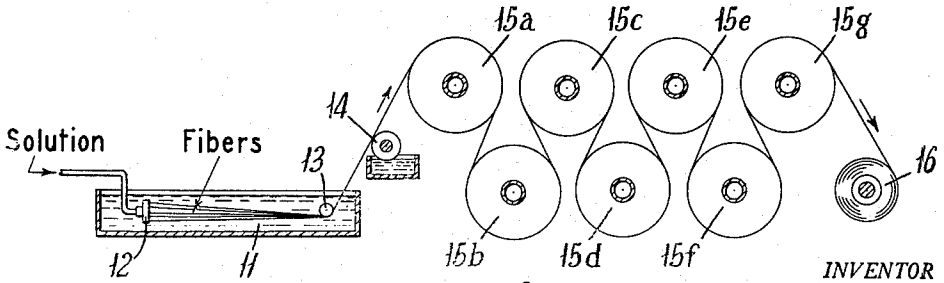

Fig. 3.

INVENTOR
ANDREW T. WALTER

BY Robert Walter

ATTORNEY

June 13, 1961 A. T. WALTER 2,988,419

PROCESS FOR SPINNING AND DRYING FIBERS OF A POLYMER CONTAINING A SIGNIFICANT AMOUNT OF ACRYLONITRILE POLYMERIZED THEREIN

Filed Jan. 18, 1957 2 Sheets-Sheet 2

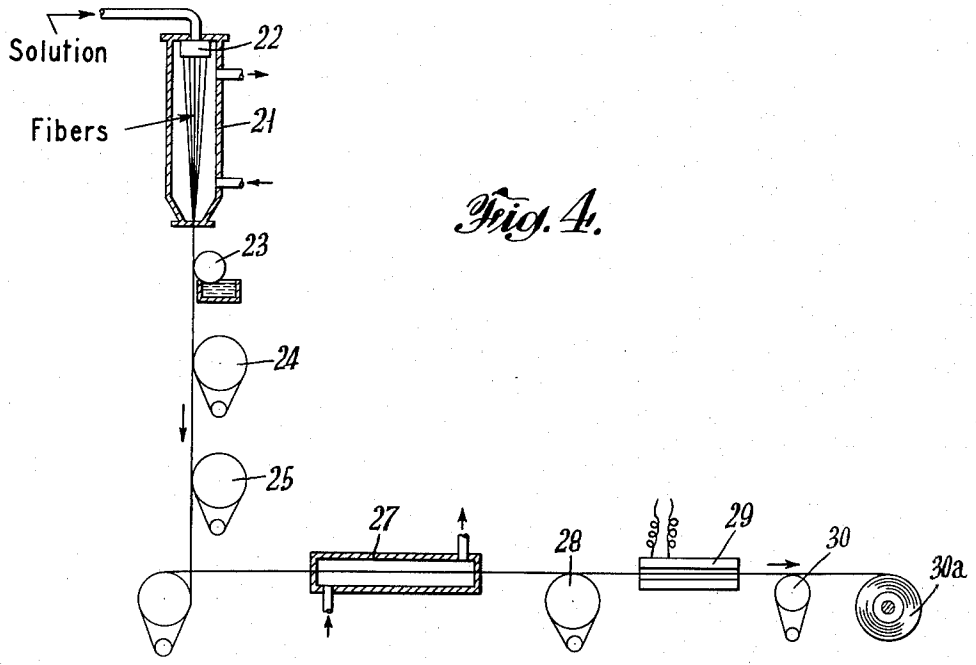

Fig. 4.

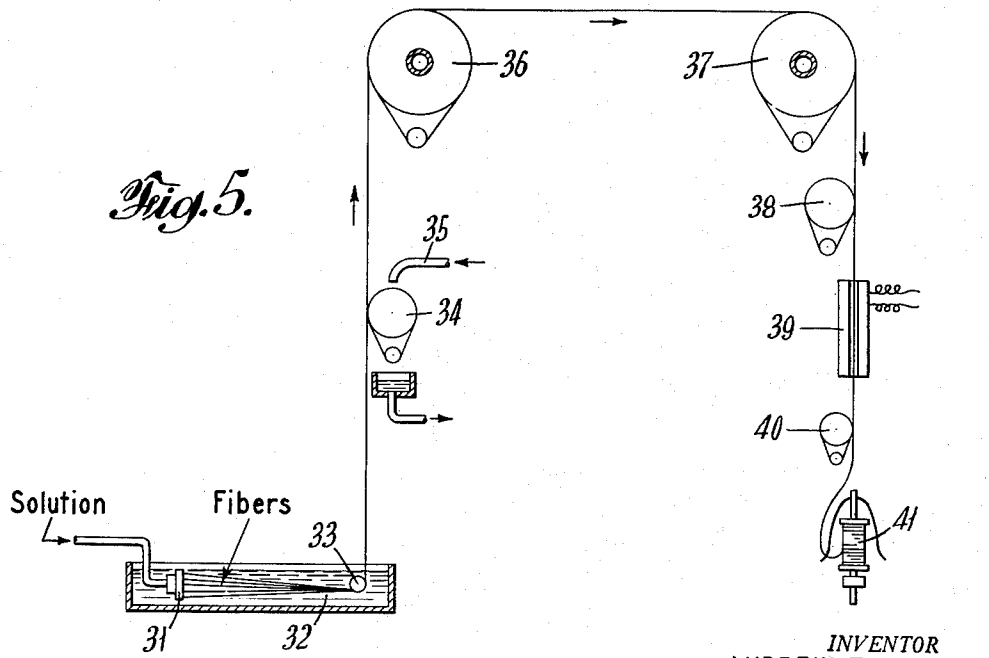

Fig. 5.

INVENTOR
ANDREW T. WALTER

BY Lewis Smith
ATTORNEY

United States Patent Office 2,988,419
Patented June 13, 1961

2,988,419

PROCESS FOR SPINNING AND DRYING FIBERS OF A POLYMER CONTAINING A SIGNIFICANT AMOUNT OF ACRYLONITRILE POLYMERIZED THEREIN

Andrew T. Walter, Charleston, W. Va., assignor to Union Carbide Corporation, a corporation of New York

Filed Jan. 18, 1957, Ser. No. 634,888
9 Claims. (Cl. 18—54)

This invention relates to a process for producing continuous filament textile yarns and tow of uniform composition and low solvent content from vinyl polymers. More particularly, this invention relates to an improved continuous process for producing continuous filament yarns and tow containing less than 2 percent of residual solvent from an acrylonitrile-containing polymer without cementation or undesirable effect on the spun fibers.

It is generally known that vinyl-polymers, particularly those containing a substantial amount of acrylonitrile can be wet or dry spun into continuous filament yarns and tow useful in producing textile products for industrial, apparel, and household applications. In spite of their recognized utility, commercial production is currently quite small compared with staple fiber on heavy tow made from these same polymers. This situation is unlike that found with most other man-made fibers where filament yarns constitute a large portion of total fibers produced.

A major reason that filament yarns produced from acrylonitrile polymers have not attained a relatively large scale commercial production is due to the technological difficulties and associated high costs encountered in manufacturing. These problems in a large part are attributable to the difficulty of removing residual solvent from the yarn after it is spun by presently employed techniques. Under dry spinning techniques, the fiber will emerge from the spinning tube containing about 10 percent to 20 percent residual solvent. In wet spinning, a solution of the resin in a volatile spinning solvent is extruded into a coagulant or extractant bath which is a non-solvent for the resin but which is miscible with the spinning solvent and removes most of the residual solvent from the resin. Amounts of 10 to 20 percent of residual spinning solvent in the fiber are nevertheless usually encountered. It is obvious that the solvent content of such fibers must be reduced before they can be made useful for textile applications.

During the spinning operations, the fibers take on a comparatively hard and impervious surface after the solvent content is reduced to 10 to 20 percent of the weight of the fiber, greatly impeding further removal of solvent by slowing diffusion of solvent to and through the surface. The rate of solvent loss is therefore markedly reduced. From this point on, heretofore it has been very difficult to remove additional solvent unless extended drying periods at high temperature or prolonged extraction in a liquid medium are employed. The use of temperature necessary to remove the greater part of the residual solvent within several minutes invariably causes surface fusion and cementation of adjacent filaments, making the yarn unsuitable for most applications. Drying periods of several hours duration at temperatures considerably below the fusion or cementation temperature are required to reduce the solvent content of the fiber to the desired level (below two percent by weight and preferably less than one percent). Drying periods of such a magnitude are objectionable and cannot be accommodated in continuous filament yarn processes, which depend upon high spinning speeds and short processing times. Heretofore, the processes had to be discontinuous in that the filament formation and solvent-removal steps

had to be carried out separately in the manufacture of the yarn, and such other steps as orientation and annealing also had to be carried out separately. This required the handling and storage of a great many packages or bobbins of yarn during the manufacturing operation and often resulted in several hours, or even days, elapsing between the time the spinning solution was forced through the spinneret and the time a finished solvent-free yarn was produced.

The dyeing characteristics of the fibers are profoundly affected by slight variations in the amount of residual solvent. It is essential that the solvent content of the fiber be maintained within very close limits if satisfactory uniformity of dyeing is to be achieved and "barre effect" in textiles made therefrom is to be eliminated. As a practical matter, it is nearly impossible to control solvent content with the necessary precision at any level above about 2 percent—hence it is necessary in practice to maintain the solvent content of the fiber at a low final value, i.e. less than two percent, in order to obtain satisfactory dyeing uniformity. As indicated, non-continuous processes are employed in actual practice. In most commercial applications the newly spun fibers are wound on bobbins and back-flushed for several hours in a hot water bath or loaded into drying ovens for extended periods at elevated temperatures to drive off the solvent. Such non-continuous processes are not only time-consuming and costly, but also it is virtually impossible to operate such noncontinuous processes without introducing serious non-uniformity into the yarns, particularly in continuous filament yarn production. Thus, if a given lot of yarn that contains for example about 15 percent of solvent, is stored for even a brief period on a bobbin or reel, the solvent content of the yarn on the outside of the package will soon be different from that of the yarn on the inside of the package. The yarn from the two locations will therefore respond quite differently to the tensions that are imposed in subsequent processing operations, and non-uniform fibers will result. In addition, these fibers will possess different dye absorption characteristics in a standard dye bath, creating variations in shades of the desired color which, when the fibers, are formed into fabrics, becomes rather pronounced, imparting thereto a "barre effect." For these reasons, the present method for continuously and quickly producing a fiber of uniform composition containing less than two percent of residual solvent content is highly advantageous.

According to the present invention, I have now discovered an improved solvent spinning process for continuously producing lustrous, void-free textile filaments, fibers, and yarns having uniform residual solvent content of less than 2 percent in less than about three minutes from a solution of a vinyl resin in a volatile spinning solvent. The process of this invention includes the steps of extruding a dope composed of a vinyl polymer dissolved in a volatile spinning solvent boiling below about 100° C. through a spinneret to form fibers containing about 20 percent by weight or less of residual solvent, subjecting the formed fibers to direct contact with a heated surface having a surface temperature of at least about 60° C. and between 5° C. and 20° C. below the fushion temperature of the fibers at the point of contact with the heated surface, increasing by increments the temperature of the surface with which the moving fiber is in contact at a rate such that the fiber-contacting surface temperature is maintained at least 5° C. below the fusion temperature of the fiber at such contacting points to a final surface temperature between 135° C. and 190° C. and until said fibers have a residual solvent content of less than 2 percent by weight and a fusion temperature of at least 150° C.

By the term "fusion temperature" as used herein, I

mean the critical temperature at which the contacting fibers become tacky and stick together, i.e. the temperature at which two or more filaments of a multifilament yarn, strand, or tow become fused or adherent to each other to such an extent that they are difficult or impossible to separate by normal methods of handling, such as by passing the fibers over guides and flexing with tensions normally encountered. This interfiber bonding or fusion can readily be identified by microscopic inspection, and is evidenced by a pronounced stiffening of the yarn. The temperature at which the interfiber fusion takes place is influenced by the pressure or tension applied to the yarn in a manner such that the fusion temperature of the fiber decreases as tension is increased, such as is shown in FIGURE 1. A convenient correlation of fusion temperature and shrinkage of the fibers exists so as to give an estimation of fusion temperature. I have found that within normal limits of error, the fusion temperature of the fiber will be about the temperature at which the fiber will shrink about 50 percent under no tension.

The fusion temperature should not be confused with the temperature necessary to reluster or fuse the interior of the fiber. The relustering temperature (or intrafiber fusion temperature) of a fiber will be lower than the exterior fusion or interfiber bonding temperature. This relustering temperature can vary from several degrees to 20° C. or more below the interfiber fusion temperature because of the normally higher solvent content in the interior of the fiber.

As an embodiment of this invention, the solvent removal from the fiber is combined with a simultaneous relustering of the fiber over a temperature range that corresponds to the change in fusion temperature of the fiber as the solvent content of the fiber is reduced. At the beginning of the solvent removal from the fiber when the fiber is most susceptible to fusion or cementation, a low temperature of the fiber contacting surface is necessary. The initial temperature must be at least 60° C. and may range from about 60° C. to about 120° C. but always between 5° and 20° below the fusion temperature of the fiber at that point. As solvent removal proceeds, the fiber contacting surface temperature is increased, either continuously in minute increments or in a step-wise manner of several larger steps to a maximum temperature which ranges between about 135° C. and 190° C. but always at least 5° C. below the fusion temperature of the fibers at the contact point.

In carrying out this invention, I have found that the most convenient way of securing and maintaining such critical temperature control is by means of heated rolls or godets. The heating can be by internal or external means as desired. In order to secure this increasing temperature gradient during the solvent removal from the fiber, a series of rolls or godets may be employed, each succeeding one heated to a higher temperature than the preceding, and controlled as to be within the limits as hereinbefore set forth. As an alternative, two long rolls arranged on non-parallel axes (a godet) may be employed such as to have an increasing temperature gradient maintained along its axial length, with either one or both rolls being heated and/or driven. Multiple laps of the fibers about these rolls will enable the fibers to be gradually heated without suffering fiber fusion as they advance rfom the cooler to warmer sections of the rolls. Similar results can be obtained if only one of two long rolls is heated and the second roll of the godet merely serves as an idler roll to facilitate the advancement of the yarn from the cooler to the hotter end of the heated roll.

A particularly desirable method for achieving the temperature gradient on the heated roll or rolls is to so construct them as to be internally heated on one end by steam coils or jacket or electrical resistance wire. The unheated end of the roll would then be maintained at a temperature somewhat below the temperature of the heated end by conducted heat. By having the fibers first contact the unheated end of the roll, and with many turns about the roll, solvent removal can proceed such that the fibers upon reaching the heated end can withstand the increased heat without fusion. Two such internally heated godets might also be arranged in series to achieve a greater overall temperature gradient.

By maintaining the heated surface or roll at a temperature close to, but at least 5° C. below, the fusion temperature curve, substantially solvent-free fibers can be achieved is less than three minutes. I have found it possible to produces a fiber having about 0.15 percent by weight or less of residual solvent in the fiber in less than three minutes and often within one minute total drying time. This is particularly desirable in continuous filament yarn production where spinning speeds must be quite high in order to achieve a reasonable poundage per hour of continuous filament yarn. By following the practice of this invention, no slow-down in production is necessary for removing solvent from the fiber. In fact, such continuously produced yarn can go directly into further processing steps without storage and collection on bobbins.

The fusion temperature of the fibers is sharply dependent both on solvent content and on the acrylonitrile content of the polymer. Solvent present in the fibers, even in modest quantities, has a plasticizing effect on the fiber and profoundly reduces the fusion temperature. For instance, a solvent-free copolymeric fiber containing 40 percent acrylonitrile and 60 percent vinyl chloride has a fusion temperature of about 150° C., but a freshly spun fiber of this composition containing about 15 percent by weight residual solvent shows a fusion temperature of about 70° C. Similarly, a nearly solvent-free polymer containing 70 percent acrylonitrile and 30 percent vinyl chloride has a fusion temperature of about 240° C., but the freshly spun fiber containing about 15 percent by weight of solvent has a fusion temperature of about 90° C. to 100° C. A similar increase in fusion temperature with an increase in acrylonitrile content is noted with other acrylonitrile-containing polymers.

In all cases with these vinyl polymers the fusion temperature increases with a decrease in solvent content in a manner similar to that shown graphically in FIGURE 1. This figure illustrates variations of fusion temperature with changes of the residual solvent content of a representative terpolymer resin fiber containing 68 percent acrylonitrile, 21 percent vinyl chloride, and 11 percent vinylidene chloride using acetonitrile as a spinning solvent, under both low and high tension (low tension being about 0.01 gram per denier and high tension being about 0.1 gram per denier). As can be readily seen from FIG. 1, freshly spun fibers containing 15–20 percent of the spinning solvent have a low fusion temperature, i.e. about 65° C. to 100° C. but as the solvent content is reduced the fusion temperature of the fiber increases to about 250 °C. It is my purpose in this invention to carry out the solvent removal and relustering at temperatures following as closely as possible this fusion temperature curve.

Vinyl polymers and copolymers in which at least one component is acrylonitrile polymerized therein and which can be spun from spinning solvents boiling below 100° C. into a fiber having a solvent-free fusion temperature of at least 150° C. can be employed in the practice of this invention. Preferred of these vinyl polymers are polymers containing a substantial amount of acrylonitrile, particularly the polymers containing between 40 and 75 percent acrylonitrile and 25 to 60 percent of another polymerizable vinyl composition such as vinyl choride, vinyl acetate, vinylidene choride, and the like. Particularly desirable results are achieved on the terpolymer composition shown for FIGURE 1, spinning from an acetonitrile solvent. Good results are also achieved with a

40 percent acrylonitrile—60 percent vinyl chloride copolymer and with copolymers containing 60 to 70 percent acrylonitrile and 30 to 40 percent vinyl choride or vinylidene chloride.

It is not critical in the operation of this process that the fibers be initially formed in any particular manner. The process is applicable to wet spinning into a liquid coagulant such as water or a water solvent mixture, or to dry spinning methods wherein the fibers are extruded into a stream of heated gaseous medium such as air or steam in a tube or chimney. It is necessary, however, that the coagulant bath or heated gaseous medium be able to remove sufficient solvent from the fiber to permit fiber contact without fusing. This is possible with a fiber having about 20 percent or less of residual solvent content in the fiber.

Under the conditions of operation as herein set forth, the solvent content of freshly spun fibers can be rapidly reduced from an initial value of about 20 percent to less than 2 percent within three minutes or less. Such rapid solvent removal is not possible by other known methods and makes it possible for fibers to be continuously spun, stretched, annealed, lubricated, twisted, and wound up on a finished package. The process is particularly desirable for continuous filament yarn production where high spinning speeds are employed. In continuous filament yarn production the number of filaments is quite low, generally about 250 or less, and high spinning speeds are necessary to produce an appreciable poundage of yarn per day. Thus continuous movement of the fibers and yarns from the spinning through the drying, orientation, and annealing operations is highly desirable. The fibers thus produced are characterized by a high degree of uniformity as to diameter and solvent content and are suitable for all subsequent processing operations. The uniformity of yarn achieved by this method greatly reduces "barre effect" in dyed fabrics made therefrom.

This process can best be illustrated by reference to the attached drawings. FIGURE 1 shows the hereinbefore discussed relationship of solvent content to fusion temperature of the fiber. FIGURE 2 represents one of the preferred forms of carrying out the invention by the use of two internally heated advancing rolls having intersecting axes in which the gradual increase in temperature is maintained in an increasing gradient across the rolls. FIGURE 3 illustrates a form of the invention particularly applicable to the continuous spinning of a heavy fiber tow, using a series of seven heated rolls, each at a temperature above the previous roll but below the fusion temperature of the fiber. FIGURE 4 shows the process as applied to dry spinning techniques employing a series of three heated rolls in combination with a stretching and annealing device. FIGURE 5 illustrates a permissible modification employing a fiber pre-wash in connection with two heated advancing rolls followed by stretching and annealing.

The process of FIGURES 2, 3, 4, and 5 diagrammatically illustrates several methods of carrying out this invention. In reference to FIGURE 2 illustrating one of the preferred forms of apparatus useful in practicing the invention, spun fibers are formed by metering the polymer solution through spinneret **2** into a bath **1** containing a liquid that is miscible with the solvent but which is a non-solvent for the fiber polymer, generally water. Sufficient solvent is removed from the yarn so that the filaments can be drawn together without fusing or sticking to each other. The yarn is then drawn over a guide pin or roll **3** and withdrawn from the bath and wrapped around the low temperature end of the heated advancing rolls **4** and **5** with 30 to 100 turns in a helical path so that the yarn is heated and solvent removed without fusing the filaments for a total residence period of two minutes or less on the rolls. The rolls are internally heated to a temperature of at least 60° C. at the low temperature end, with the interior of the rolls heated with steam such that an increasing temperature gradient is maintained across the rolls to a final temperature between 135° C. and 170° C.

The nearly solvent-free yarn leaving rolls **4** and **5** can be wound on a suitable winding device **9** or, as shown, can be stretched on stretching wheel **6** through heater **7** with a relaxation of tension on wheels **8** to anneal the fiber.

In FIGURE 3, the polymer solution is forced through a spinneret **12** below the surface of the coagulating medium in bath **11** withdrawn from the bath over pin **13** and, if desired, lubricant applied by a suitable applicator **14** and fed to a series of identical drying rolls **15***a* to *g*. The first of these rolls, **15***a*, is maintained at a temperature of at least 60° C. and between 5° and 20° C. below the fusion temperature of the fiber. Each subsequent roll **15***b* to *g* is maintained each at increasing temperatures to a final temperature between 135° C. to 170° C., with the fibers, preferably a tow of 1000–2500 individual fibers, making less than a complete lap on each heated roll, and wound up on a take-up bobbin **16**.

In FIGURE 4, the yarn is dry-spun through a hot air drying tube **21** from spinneret **22** through a countercurrent stream of hot air. The yarn issuing from the bottom of the tube will contain about 10–15 percent of residual solvent. Lubricant can be applied to the yarn by a suitable applicator **23**, and the yarn dried on a series of three drying godets **24**, **25**, and **26**. The temperature of **25** being higher than **24**, and the temperature of **26** being higher than **25**. Each godet can, if desired, have an independent temperature gradient across the roll as hereinbefore described. The nearly solvent-free yarn can be directly processed by stretching steam tube **27** and godet **28**, and annealing with a suitable annealing device **29** and tensioning godet **30** and picked up on a bobbin or winding device **30***a*.

Another form of the practice of this invention is illustrated in FIGURE 5. The polymeric solution is forced through spinneret **31** into the coagulating medium in bath **32** and withdrawn from the bath over pin or roller **33**. The fiber can be washed with water or solvent in a suitable device **34** and **35** to wash off the spinning bath "carry out" or to further extract spinning solvent from the fiber to reduce solvent content to less than 20 percent. The fibers are then conducted over the first heated advancing godet **36** with sufficient laps so that solvent content is reduced to about 4–5 percent and then conducted to a second heated advancing godet **37** where the solvent content is reduced to less than **2** percent. Stretching is accomplished by godet **38** and annealing in device **39** and godet **40** and the fiber taken up on a suitable take-up bobbin **41**.

The following examples are illustrative. When herein employed the word "yarn" means the bundle of fibers containing one filament for each spinneret hole.

Example 1

Twelve pounds of a copolymer consisting of 33.6 percent vinyl chloride and 66.4 percent acrylonitrile having a specific viscosity of 0.347 at 20° C. in a 0.2 percent solution of dimethylformamide were added to 48 pounds of acetonitrile contained in a jacketed dope-mixing pot at room temperature. The slurry was heated with stirring until solvated and the pot sealed and heating was continued for one hour at 90° C. The solution was cooled to 75° C., filtered, and metered to a spinneret containing 1250 holes, each 0.14 mm. in diameter. The filaments were extruded at the rate of 10–15 ft./min. into a coagulating bath consisting of a mixture of water and acetonitrile in a weight ratio of 85–to–15 maintained at 65° C., and then passed to a second bath consisting of water maintained at 85° C.–95° C. After about one minute contact in the baths, the yarn was withdrawn from the bath and passed onto the first of a series of four drying wheels or drums. Each wheel was 3 feet in diameter and 4 inches wide and was heated by means of steam

circulated through tubing welded to the inside circumferential surface of the wheel. The temperature of the outside surface was controlled separately for each wheel by adjusting the steam pressure in the tubing. The surface temperature was lowest for the first wheel maintained between 5° C. and 20° C. below the fusion temperature of the fiber in order to avoid filament fusion and was increased progressively with each succeeding wheel. The wheels were arranged as shown in FIGURE 3 so that the yarn was carried approximately two-thirds around each wheel before progressing to the next wheel. The wheels were rotated with a surface speed of 16.5 ft./min. to provide a total drying time of 103 seconds, or about 26 seconds for each wheel. The dry weight of the yarn (less all water and solvent) was determined at various points in the drying operation by measuring the loss in weight of yarn skeins after drying for 30 minutes at 125° C., conditions which are known to remove all volatile material. The freshly spun yarn after leaving the bath and before contacting the first drying wheel containing about 13 percent solvent retained in the fiber and about 120 percent excess coagulant carried out of the bath on the surface of the yarn.

A large portion of the liquid or volatile material was removed from the yarn on the first wheel and the remainder was removed on the subsequent wheels. The percent total solids (percent dry weight) of the yarn after contacting each wheel and the surface temperature of each wheel is given in the following table.

Drying Wheel	Drying Wheel, ° C.	Percent Total Solids of Yarn After Contacting Drying Wheels
No. 1	113	[1] 73.0
No. 2	122	[1] 78.0
No. 3	127	96.0
No. 4	136	98.8

[1] Including coagulating bath liquid carry-out on fibers.

After the fourth drying roll, the volatile solvent content, corresponding to the amount of solvent still retained in the yarn, was reduced to a value of only 1.2 percent of the total weight of the dried yarn. This was accomplished in less than two minutes without fusing the filaments of the yarn. The dry yarn was then stretched 900 percent in a steam stretching tube heated to about 120° C., annealed by allowing 16 percent shrinkage while passing through a slotted bar heated to 205° C., and then was wound on a spinning bobbin. The resulting 3875-denier, 1250-filament yarn had a tenacity of 3.16 grams per denier, 17.5 percent elongation at break, and 1.8 percent and 1.6 percent shrinkage in boiling water and 150° C. air, respectively. It was lustrous, void free, and had a soft and open feel free of fiber fusion.

Example 2

A spinning solution consisting of 150 parts of acetonitrile, 50 parts of an acrylonitrile-vinyl chloride copolymer (69.1 percent acrylonitrile, 30.9 percent vinyl chloride, specific viscosity of 0.442 at 20° C. in dimethylformamide) and 1 part of dioctyl tin maleate as a stabilizer was prepared by making a slurry at room temperature and then heating to about 80° C. to bring about the dissolution of the resin in one hour. The solution was then pumped at 75° C. through a spinneret having 40 holes, each 0.10 mm. in diameter, at a rate of 12.5 cc. per minute. The yarn was coagulated by passing upward through a bath containing 9 parts by weight of water to 1 part of acetonitrile at 75° C. for a distance of about 30 inches. The yarn was withdrawn from the bath by an unheated godet located immediately above the bath, and then advanced in a helical path around the godet with ten laps while being washed with a stream of water at 92° C. flowing at a rate of 180 cc. per minute. The coagulated and washed yarn containing 15.9 percent solvent by analysis was then passed to drying rolls consisting of two rolls, 4 inches in diameter and 24 inches long. The rolls were located one over the other with their axes intersecting in a common plane as shown in FIGURE 2 so that the yarn was made to pass 80 times in a helical path around the two rolls as it advanced from one end to the other. Both rolls were heated internally in four separate sections so that the temperature of each roll could be increased from one end to the other. By this method the yarn was first subjected to a low drying temperature at the initial contact and then to increasing temperatures as it advanced across the godet. The surface temperature at various points along the roll, the time required for the yarn to advance to this point, and the solvent content of the yarn at each point are summarized in the following table.

Distance yarn advanced across godet, inches	Approximate time required for yarn to advance, sec.	Temperature of godet at the point of yarn advance, ° C.	Solvent retained in yarn at point of advance, percent
0	0	102	15.9
5	25	114	8.3
10	45	131	4.9
15	60	138	3.5
20	95	162	1.8

The data in the above table show that the solvent content was reduced to less than 2 percent in only 95 seconds drying time. The drying operation was also accomplished without causing filament fusion. The yarn was soft and open, lustrous, and void free and was suitable for further processing such as stretching and annealing.

By way of contrast, a similar yarn sample was coagulated and washed in a similar manner and wound around the same drying godet that was instead heated to a uniform temperature of 105° C. This was the highest temperature that could be used without causing serious filament cementation, and after the yarn had advanced across the godet for approximately 20 inches—in this case requiring 105 seconds—it still contained as much as 4.5 percent solvent by analysis. Therefore, in spite of the slightly longer drying time, the solvent content could not be reduced to an acceptable value by employing a fixed drying temperature.

Example 3

Seventeen hundred and twenty-four grams (1724) of a terpolymer consisting of 69.6 percent acrylonitrile, 20.4 percent vinyl chloride, and 10.0 percent vinylidene chloride having a specific viscosity of 0.368 at 20° C. in an 0.2 percent dimethylformamide solution, 26 grams of dioctyl tin maleate and 5250 grams of acetonitrile were slurried in a jacketed dope mixing pot. The slurry was heated to 70° C. and mixed until solvation occurred. The vessel was sealed and the temperature increased to 83° C. and maintained at that temperature during the entire spinning operation. The solution was then pumped through a dope filtering system to a metering pump that metered the dope to a spinneret having 100 holes each 0.16 mm. in diameter. The solution was extruded at a rate of 23 cc. per minute into a bath consisting of water and acetonitrile in the ratio of 85 to 15 at 64° C. through a distance of 45 inches. The freshly coagulated yarn containing about 17.3 percent residual solvent, and having a fusion temperature of about 100° C. was withdrawn from the bath and passed continuously at a rate of 94 ft. per minute around a godet consisting of an unheated idler roll 10 inches long and 1.5 inches in diameter, and a heated drying roll 10 inches long and 8.5 inches in diameter.

The roll was internally heated with steam to a temperature of 110° C. but due to the evaporation of water from the yarn and the relatively low heat transfer of the roll, the surface temperature was reduced to 90° C. at the

point where the yarn first contacted the roll. The yarn made approximately 33 laps on the godet, advancing in a helical path from the cool (90° C.) end of the roll to the warm end (110° C.) with a period of 53 seconds. At this point the water was completely evaporated from the surface of the yarn and the residual solvent content was analyzed and found to be 5.1 percent and had a fusion temperature of about 185° C. This yarn, which was then very much more resistant to filament fusion than the freshly coagulated yarn was passed to a second heated godet similar in construction to the first godet, but heated to a surface temperature of 187° C. and rotating at a rate of 100 ft. per minute. The yarn made 25 laps around the hot godet as it advanced in a helical path to the forward end of the roll within a period of 37 seconds.

The yarn was stretched 522 percent at 187° C. by means of a stretching godet operating at a speed of 622 ft. per minute. After about four laps around the unheated stretching godet, the yarn was passed continuously through an annealing device where the yarn was heated to a temperature of 220° C. for approximately 0.02 seconds and allowed to shrink 11.2 percent. The stretched and annealed yarn containing only 0.15 percent residual solvents by analysis was wound up on a spinning bobbin at 560 ft. per minute. The yarn was lustrous and void free, and had a soft feel and the individual filaments in the yarn could easily be distinguished from each other indicating that the yarn was unfused. The finished yarn was produced with a total process time of only about 95 seconds and at a spinning rate of approximately 0.4 pounds per hour.

The properties of the 209-denier, 100-filament yarn obtained in the above described manner were as follows:

Tenacity, g.p.d.	3.74
Elongation at break, percent	16
Percent shrinkage in:	
Boiling water	2
150° C. air	1
200° C. air	5.5

Example 4

Fourteen hundred and seventy-eight grams of a copolymer consisting of 67 percent acrylonitrile and 33 percent of vinyl chloride having a specific viscosity of 0.251 at 20° C. in an 0.2 percent dimethylformamide solution, together with 23 grams of dioctyl tin maleate and 4500 grams of acetonitrile were slurried in a jacketed dope mixing pot. The slurry was heated to 70° C. and mixed until solvation occurred. The vessel was sealed and the temperature increased to 83° C. The solution was then pumped through a filtering system to a metering pump that metered the dope to a spinneret having 100 holes each 0.16 mm. in diameter. The solution was extruded at a rate of 23 cc. per minute into a bath consisting of water and acetonitrile in a weight ratio of 87.5 to 12.5 at 65° C. and traveled through the bath for a distance of 45 inches. The freshly spun yarn, which was analyzed and found to contain 15.4 percent residual solvent, having a fusion temperature of about 100° C. was then drawn continuously from the bath and passed to an internally heated godet at a rate of 94 ft. per minute in a manner similar to that described in Example 5. The wet yarn first contacted the roll at a roll temperature of 90° C. and made 40 laps around the godet as it advanced to the forward end of the roll within a period of 66 seconds. The surface temperature of the roll contacting the yarn gradually increased to 112° C. as the water was evaporated from the surface of the yarn, and the yarn leaving this roll contained 5.8 percent residual solvent by analysis and had a fusion temperature of 205° C. The yarn was then passed to a second heated godet operating at 100 ft. per minute and 170° C. upon which it advanced in 23 laps to the forward end of the roll within a period of 35 seconds. The yarn was then dry-stretched 522 percent over a heated stretching wheel attached to the second drying godet. The stretched yarn contained only 0.7 percent residual solvent. It was then passed continuously through an annealing device at 220° C. wherein it was heated to about 220° C. for approximately 0.02 second and was allowed to shrink 10.2 percent. The 211-denier, 100-filament stretched and annealed yarn containing 0.7 percent residual solvent was wound up at a rate of 550 ft. per minute and upon examination showed a lustrous, void free appearance, free from filament fusion. The properties of the yarn produced in this manner are summarized below.

Final fusion temp.	>250° C.
Tenacity, g.p.d.	3.45
Elongation at break, percent	17.0
Percent shrinkage in:	
Boiling water	3.0
150° C. air	3.0
200° C. air	10.0

Example 5

Two thousand grams of a copolymer consisting of 60.2 percent vinyl chloride and 39.8 percent acrylonitrile and having a specific viscosity of 0.26 at 20° C. in an 0.20 percent solution of cyclohexanone, together with 40 grams of dioctyl tin maleate were added to 5140 grams of acetone at −20° C. to form a slurry. The slurry was heated while stirring in a jacketed vessel to 45° C. whereupon the slurry became very viscous due to solvation of the resin. The vessel was sealed and the temperature increased to 80° C. After one hour at 80° C., the temperature of the solution was reduced to 50° C. and was then pumped through a filter and fed to a gear-type metering pump. The solution was metered to a spinneret consisting of 500 holes each 0.15 mm. in diameter, and extruded at the rate of 45 feet per minute into a coagulating bath consisting of water and acetone in a weight ratio of 85–to–15 at 50° C. After a coagulation period of 5.4 seconds, the freshly coagulated yarn was withdrawn from the coagulation bath and passed around a godet where it was washed for a period of 5 seconds with water at about 60° C. The yarn was then passed to the first drying godet consisting of an unheated idler roll 10 inches long and 1.5 inches in diameter and an internally heated roll 10 inches long and 8.5 inches in diameter turning with a peripheral speed of 47.8 feet per minute and a maximum surface temperature of 52° C. The yarn advanced in a helical path around the godet with a sufficient number of laps to provide a total heating time of about 135 seconds. After leaving the first drying godet, the surface of the yarn was dry and enough of the residual solvent in the yarn was removed to permit it to be further dried at a much higher temperature without encountering fusion of the filaments in the yarn. The yarn was thus passed to a second drying godet similar in construction to the first but heated internally to a surface temperature of 140° C. The yarn advanced in a helical path around the godet with 29 laps to provide a contact time of 85 seconds. After the drying was completed, the hot yarn was stretched 350 percent directly from the surface of the drying roll by means of an unheated stretching godet operating with a surface speed of 222 feet per minute. The stretched yarn was later annealed in a separate operation by passing it through a slotted bar heated to about 150° C. at a rate of 200 feet per minute. The yarn was heated by radiation for approximately 5 seconds, and during this period was allowed to shrink 10 to 12 percent.

The final 3372-denier, 250-filament yarn was soft and "open" which indicated that it was free of filament fusion, and by analysis had only from 1.3 to 1.5 percent residual acetone and was lustrous and void-free. Solvent content of the tow was measured by extracting the solvent from the yarn for 16 hours in water in 100° C. and then analyzing the extractant for acetone content. The physical properties of the annealed yarn are: denier, 3372; tenacity, g.p.d., 1.7; elongation at break, percent 70.0; percent

shrinkage in boiling water, 5.0; in 125° C. air, 4.5; and in 150° C. air, 49.0.

Example 6

A two inch, 3 denier staple fiber of a 60 percent acrylonitrile-40 percent vinylidene chloride copolymer, manufactured by the Tennessee Eastman Company under the name of Verel was scoured in a soap solution at 50° C. to removing processing finishes, rinsed in 50° C. water and dried at 65° C. in a circulating air oven for 16 hours.

Seven hundred and seventy-five grams (775) of the above scoured fiber which had a specific viscosity of 0.238 in a 0.2 percent dimethylformamide solution at 20° C. were mixed with 3000 grams of acetonitrile and heated to 50° C. for one hour to form a solution. Evaporation losses were such as to reduce the acetonitrile content to 1938 grams. The jacketed mixing vessel was sealed and the solution aged for one hour at 80° C. to remove bubbles. The solution was then pumped through a filtering system to a metering pump and thence through a spinneret having 100 holes each 0.10 millimeter in diameter. The solution was extruded at a rate of 83.5 feet per minute into an aqueous coagulating bath containing 10 percent acetonitrile at 60° C. The yarn was withdrawn from the bath after 2.7 seconds by a godet located immediately above at a rate of 83.5 feet per minute and advanced in a helical path with eight laps around the godet for 8 seconds while being washed with an aqueous solution at 82° C. containing 0.5 percent polyoxyethylene glycol having an average molecular weight of about 4000. The washed yarn which contained 7.10 percent solvent by analysis was then passed continuously at a rate of 97 feet per minute onto an internally heated godet whose surface temperature at this end was 113° C. The yarn advanced in a helical path for 29 laps to provide a contact time of 52 seconds. The surface temperature of the godet at this point was 126° C. After leaving the first drying godet the yarn contained 2.49 percent solvent by analysis and was continuously passed to a second internally heated godet having a surface speed of 102 feet per minute and a surface temperature at this end of 142° C. After 29 laps, or a contact time of 43 seconds, the yarn containing 0.94 percent solvent was withdrawn from the drying godet at a point where the surface temperature was maintained at 164° C. The dry yarn passed continuously to a stretching godet operating at a surface speed of 612 feet per minute to induce a stretch of 500 percent. From this godet the yarn passed through an annealing device heated to about 230° C. wherein the yarn was exposed for about 0.2 second and allowed to shrink 15.2 percent and was finally wound onto a spinning bobbin at 519 ft. per minute. By this method yarns essentially free of solvent (less than 1.0 percent by analysis) were produced which were lustrous and free of voids and interfiber fusion. Properties of continuously produced 265 denier, 100 filament yarns are summarized below.

Dry tenacity, g.p.d.	2.4
Elongation at break, percent	11.0
Percent shrinkage in boiling water	8.0

I claim:

1. A process for continuously producing textile filaments and yarns having low solvent content and free from interfiber fusion from a vinyl polymer in which at least one component is acrylonitrile present in a significant amount polymerized therein, which includes the steps of extruding a dope consisting of the said polymer dissolved in a spinning solvent boiling below about 100° C. through a spinneret to form fibers containing less than about 20 percent by weight of residual solvent and subjecting the formed fibers to direct contact with a heated surface maintained at a temperature of at least about 60° C. and between 5° C. and 20° C. below the fusion temperature of the fiber at the point of contact with the heated surface, increasing by increments the temperature of the surface to which the fiber is in contact at a rate such that the fiber contacting surface is maintained at least 5° C. below the fusion temperature of the fiber at such contacting points to a final surface temperature between 135° C. and 190° C. and until said fibers have a residual solvent content of less than about 2 percent by weight and a fusion temperature of at least 150° C.

2. A process for continuously producing textile filaments and yarns having low solvent content from a vinyl polymer containing between about 40 percent and about 75 percent acrylonitrile polymerized therein, which includes the steps of extruding a dope consisting of the said polymer dissolved in a spinning solvent boiling below about 100° C., through a spinneret to form fibers containing less than about 20 percent by weight of residual solvent, and subjecting the formed fibers to direct contact with a heated surface maintained at a temperature of at least about 60° C. and between 5° C. and 20° C. below the fusion temperature of the fiber at the point of contact with the heated surface, increasing by increments the temperature of the surface to which the fiber is in contact at a rate such that the fiber contacting surface is maintained at least 5° C. below the fusion temperature of the fiber at such contacting points to a final surface temperature between 135° C. and 190° C. until said fibers have a residual solvent content of less than about 2 percent by weight and a fusion temperature of at least 150° C.

3. A process for continuously producing textile filaments and yarns of uniform composition and low solvent content from a vinyl polymer which includes the steps of extruding a dope consisting of the said polymer dissolved in a spinning solvent boiling below about 100° C. through a spinneret to form fibers containing less than about 20 percent by weight of residual solvent, and subjecting the formed fiber to direct contact with a plurality of heated rolls in series, the first contacting roll being maintained at a temperature of at least about 60° C. and between 5° C. and 20° C. below the fusion temperature of the fiber at the point of contact with the heated surface, increasing by increments the temperature of the surface of the rolls to which the fiber is in contact at a rate such that the fiber contacting surface is always maintained at least 5° C. below the fusion temperature of the fiber at all points of contact to a final surface temperature between 135° C. and 190° C. until said fibers have a residual solvent content of less than about 2 percent by weight and a fusion temperature of at least 150° C., thereby avoiding filament fusion and adhesion.

4. A process for continuously producing textile filaments and yarns having low solvent content free from interfiber fusion from a vinyl polymer in which at least one component is acrylonitrile present in a significant amount polymerized therein, which includes the steps of extruding a dope consisting of the said polymer dissolved in a spinning solvent boiling below about 100° C. through a spinneret to form fibers containing less than about 20 percent by weight of residual solvent and subjecting the formed fibers to direct contact with a plurality of heated rolls in series, the first contacting roll being maintained at a temperature of at least about 60° C. and between 5° C. and 20° C. below the fusion temperature of the fiber at the point of contact with the heated surface, increasing by increments the temperature of the surface of the rolls to which the fiber is in contact at a rate such that the fiber contacting surface is maintained at least 5° C. below the fusion temperature of the fiber at such contacting points to a final surface temperature between 135° C. and 190° C. until said fibers have a residual solvent content of less than about 2 percent by weight and a fusion temperature of at least 150° C., and the total residence time of said fibers during the heating being 3 minutes or less, and thereby avoiding filament fusion and adhesion.

5. A process for continuously producing textile fila-

ments and yarns having low solvent content from a vinyl polymer containing between about 40 percent and about 75 percent acrylonitrile polymerized therein, which includes the steps of extruding a dope consisting of the said polymer dissolved in a spinning solvent boiling below about 100° C. through a spinneret to form fibers containing less than about 20 percent by weight of residual solvent, and subjecting the formed fibers to direct contact with a heated surface maintained at a temperature of at least about 60° C. and between 5° C. and 20° C. below the fusion temperature of the fiber at the point of contact with the heated surface, increasing the temperature of the surface to which the fiber is in contact at a rate such that the fiber contacting surface is always maintained at least 5° C. below the fusion temperature of the fiber at such contacting points to a final surface temperature between 135° C. and 190° C. until said fibers have a residual solvent content of less than about 2 percent by weight and a fusion temperature of at least 150° C., and the total residence time of said fibers during the heating being 3 minutes or less, and thereby avoiding filament fusion and adhesion.

6. A process for continuously producing textile filaments and yarns having low solvent content free from interfiber fusion from a vinyl polymer in which at least one component is acrylonitrile present in a significant amount polymerized therein, which includes the steps of extruding a dope consisting of the said polymer dissolved in a spinning solvent boiling below about 100° C. through a spinneret to form fibers containing less than about 20 percent by weight of residual solvent and subjecting the formed fibers to direct contact with a heated godet having a temperature gradient maintained along the axial length of the circumferential surface of the godet, contacting the formed fibers with the cooler end of the godet maintained at a temperature of at least about 60° C. and between 5° C. and 20° C. below the fusion temperature of the fiber at the point of contact with the heated surface, advancing the fiber on the godet toward the hotter end such that the temperature of the fiber contacting surface is maintained at least 5° C. below the fusion temperature of the fiber to a final surface temperature between 135° C. and 190° C. until said fibers have a residual solvent content of less than 2 percent by weight and a fusion temperature of at least 150° C., thereby avoiding filament fusion and adhesion.

7. A process for continuously removing solvent from textile filaments and yarns of a vinyl polymer in which at least one component is acrylonitrile present in a significant amount polymerized therein and containing between 2 and 20 percent by weight of a solvent having an atmospheric boiling point below about 100° C., which includes the step of contacting the fiber first to a temperature of at least about 60° C. and between 5° C. and 20° C. below the fusion temperature of the fiber, increasing by increments the temperature to which the fiber is in contact to a final temperature between 135° C. and 190° C. at a rate such that the temperature to which the fiber is in contact is always maintained at least 5° C. below the fusion temperature of the fiber at such points and until said fibers have residual solvent content of less than about 2 percent by weight and a fusion temperature of at least 150° C.

8. A process for continuously removing solvent from textile filaments and yarns of a vinyl polymer containing between about 40 percent and about 75 percent acrylonitrile polymerized therein and which contains from 2 to 20 percent by weight of a solvent having an atmospheric boiling point below about 100° C. which includes the step of subjecting the formed fibers to direct contact with a plurality of heated rolls in series, the first contacting roll being maintained at a temperature of at least about 60° C. and between 5° C. and 20° C. below the fusion temperature of the fiber at the point of contact with the heated surface, increasing by increments the surface temperature of the rolls to which the fiber is in contact at a rate such that the fiber contacting surface is maintained at least 5° C. below the fusion temperature of the fiber at such contacting points to a final surface temperature between 135° C. and 190° C. until said fibers have a residual solvent content of less than 2 percent by weight and a fusion temperature of at least 150° C.

9. A process for continuously removing solvent from textile filaments and yarns of a vinyl polymer containing between about 40 percent and about 75 percent acrylonitrile polymerized therein and which contains from 2 to 20 percent of a solvent having an atmospheric boiling point below about 100° C. which includes the step of subjecting the formed fibers to direct contact with a heated godet having a temperature gradient maintained along the axial length of the circumferential surface of the godet, contacting the formed fibers first with the cooler end of the godet maintained at a temperature of at least about 60° C. and between 5° C. and 20° C. below the fusion temperature of the fiber at the point of contact with the heated surface, advancing the fiber on the godet toward the hotter end such that the temperature of the fiber contacting surface is maintained at least 5° C. below the fusion temperature of the fiber to a final surface temperature between 135° C. and 190° C. until said fibers have a residual solvent content of less than 2 percent by weight and a fusion temperature of at least 150° C.

References Cited in the file of this patent

UNITED STATES PATENTS

2,244,745	Uytenbogaart et al.	June 10, 1941
2,622,182	Forzley et al.	Dec. 16, 1952
2,692,185	Hooper	Oct. 19, 1954
2,697,023	Martin	Dec. 14, 1954
2,733,121	Griffith	Jan. 31, 1956
2,811,409	Clapp	Oct. 29, 1957

OTHER REFERENCES

Dupont Textile Fibers, Technical Information, Bulletin, July 1955.