Office de la Propriété Intellectuelle du Canada
Un organisme d'Industrie Canada

Canadian Intellectual Property Office
An agency of Industry Canada

CA 2158640 C 2005/06/07

(11)(21) 2 158 640

(12) BREVET CANADIEN
CANADIAN PATENT

(13) C

(86) Date de dépôt PCT/PCT Filing Date: 1994/03/30
(87) Date publication PCT/PCT Publication Date: 1994/10/13
(45) Date de délivrance/Issue Date: 2005/06/07
(85) Entrée phase nationale/National Entry: 1995/09/19
(86) N° demande PCT/PCT Application No.: US 1994/003518
(87) N° publication PCT/PCT Publication No.: 1994/022361
(30) Priorité/Priority: 1993/03/30 (08/040,168) US

(51) Cl.Int.^{6}/Int.Cl.^{6} A61B 10/00

(72) Inventeurs/Inventors:
CHANCE, BRITTON, US;
KAUFMANN, KENNETH J., US

(73) Propriétaire/Owner:
NON-INVASIVE TECHNOLOGY, INC., US

(74) Agent: SHAPIRO COHEN

(54) Titre : EXAMEN QUANTITATIF ET QUALITATIF DE TISSU IN VIVO GRACE A LA SPECTROSCOPIE A RESOLUTION TEMPORELLE

(54) Title: QUANTITATIVE AND QUALITATIVE IN VIVO TISSUE EXAMINATION USING TIME RESOLVED SPECTROSCOPY

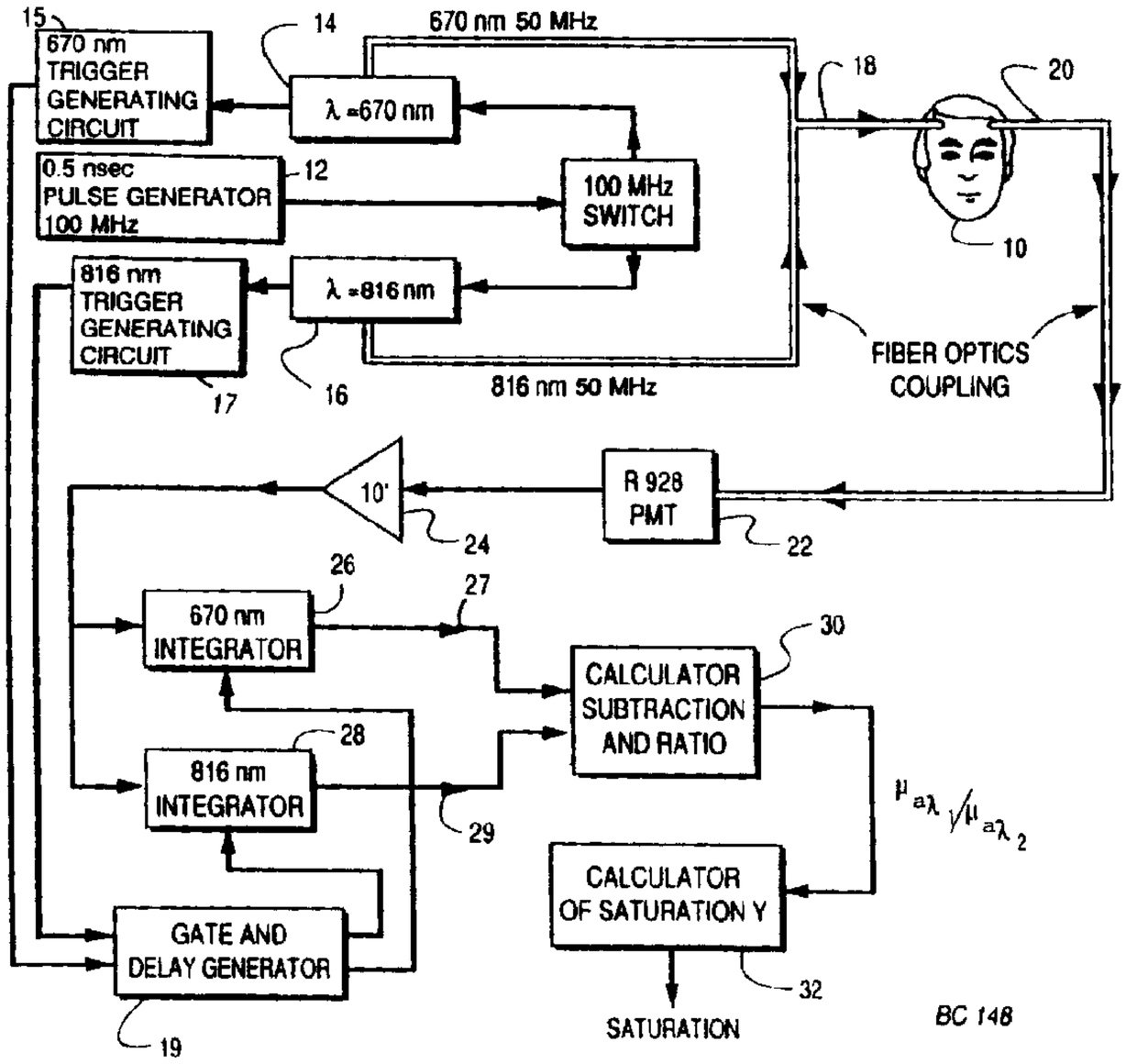

(57) Abrégé/Abstract:
A system for examination of biological tissue of a subject (10) includes a light source (14), (16), a light detector (22), a gated integrator (26), (28), and an integrator timing control (19) adapted to integrate detected photons over at least two selected time intervals. The light source (14), (16) is adapted to introduce into the tissue, at an input port, pulses of electromagnetic radiation of a selected wavelength in the visible or infrared range. The detector (22) detects photons of modified pulses that have migrated in the tissue from the input port. The integrator (26), (28) registers all photons detected over preselected time intervals of the arrival time of the modified pulses. A processor (30) adapted to receive data from the integrator (26), (28) determines a physiological property of the examined tissue based on the number of photons integrated over each time interval.

2158640

PCT WORLD INTELLECTUAL PROPERTY ORGANIZATION
International Bureau

INTERNATIONAL APPLICATION PUBLISHED UNDER THE PATENT COOPERATION TREATY (PCT)

(51) International Patent Classification 5 : **A61B 5/00** | **A1**

(11) International Publication Number: **WO 94/22361**

(43) International Publication Date: 13 October 1994 (13.10.94)

(21) International Application Number: PCT/US94/03518

(22) International Filing Date: 30 March 1994 (30.03.94)

(30) Priority Data:
08/040,168 30 March 1993 (30.03.93) US

(71) Applicants: NON INVASIVE TECHNOLOGY, INC. [US/US]; Suite 508, 3624 Market Street, Philadelphia, PA 19104 (US). PHOTONICS RESEARCH CORPORATION [US/US]; 360 Foothill Road, Bridgewater, NJ 08807 (US).

(72) Inventors: CHANCE, Britton; 206 Bruce Court, Marathon, FL 33050 (US). KAUFMANN, Kenneth, J.; 13 Woodbine Circle, New Providence, NJ 07974 (US).

(74) Agent: WILLIAMS, John, N.; Fish & Richardson, 225 Franklin Street, Boston, MA 02110-2804 (US).

(81) Designated States: CA, CN, JP, European patent (AT, BE, CH, DE, DK, ES, FR, GB, GR, IE, IT, LU, MC, NL, PT, SE).

Published
With international search report.

(54) Title: QUANTITATIVE AND QUALITATIVE IN VIVO TISSUE EXAMINATION USING TIME RESOLVED SPECTROSCOPY

(57) Abstract

A system for examination of biological tissue of a subject (10) includes a light source (14), (16), a light detector (22), a gated integrator (26), (28), and an integrator timing control (19) adapted to integrate detected photons over at least two selected time intervals. The light source (14), (16) is adapted to introduce into the tissue, at an input port, pulses of electromagnetic radiation of a selected wavelength in the visible or infrared range. The detector (22) detects photons of modified pulses that have migrated in the tissue from the input port. The integrator (26), (28) registers all photons detected over preselected time intervals of the arrival time of the modified pulses. A processor (30) adapted to receive data from the integrator (26), (28) determines a physiological property of the examined tissue based on the number of photons integrated over each time interval.

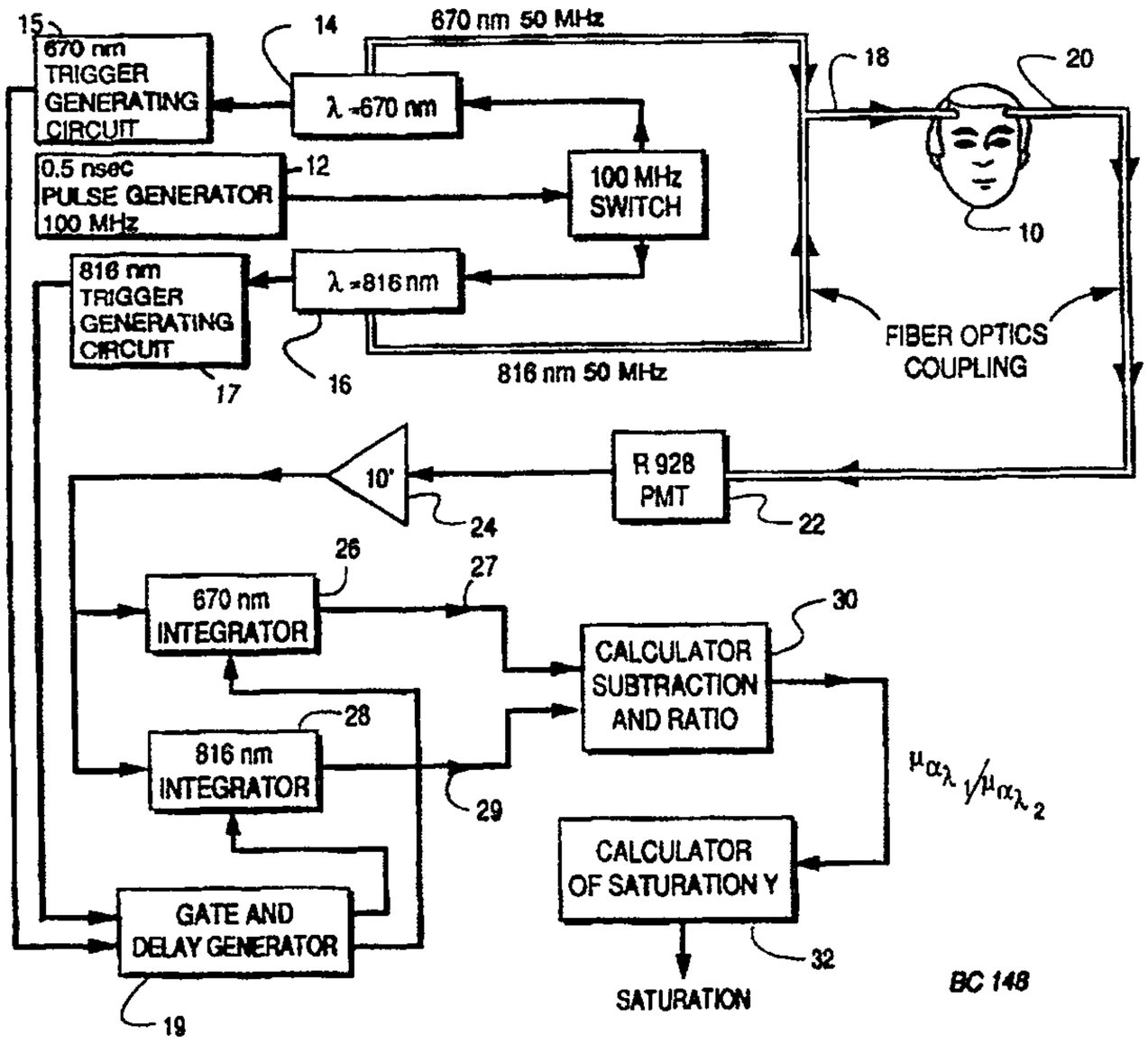

QUANTITATIVE AND QUALITATIVE IN VIVO TISSUE EXAMINATION USING TIME RESOLVED SPECTROSCOPY

Background of the Invention

The present invention relates to a time resolved spectroscopy method and apparatus for *in vivo* characterization of tissue.

Continuous wave (CW) tissue oximeters have been widely used to determine *in vivo* concentration of an optically absorbing pigment (e.g., hemoglobin, oxyhemoglobin) in biological tissue. The CW oximeters measure attenuation of continuous light in the tissue and evaluate the concentration based on the Beer Lambert equation or modified Beer Lambert absorbance equation. The Beer Lambert equation (1) describes the relationship between the concentration of an absorbent constituent (C), the extinction coefficient (ε), the photon migration pathlength <L>, and the attenuated light intensity (I/I_o).

$$\frac{\log[I/I_0]}{\langle L\rangle} = \sum \epsilon_i C_i \qquad (1)$$

The CW spectrophotometric techniques cannot determine ε, C, and <L> at the same time. If one could assume that the photon pathlength were constant and uniform throughout all subjects, direct quantification of the constituent concentration (C) using CW oximeters would be possible.

In tissue, the optical migration pathlength varies with the size, structure, and physiology of the internal tissue examined by the CW oximeters. For example, in the brain, the gray and white matter and the structures thereof are different in various individuals. In addition, the photon migration pathlength itself is a function of the relative concentration of absorbing

constituents. As a result, the pathlength through an organ with high blood hemoglobin concentration, for example, will be different from the same with a low blood hemoglobin concentration. Furthermore, the pathlength is frequently dependent upon the wavelength of the light since the absorption coefficient of many tissue constituents is wavelength dependent. Thus, where possible, it is advantageous to measure directly the pathlength when quantifying the hemoglobin concentration in tissue.

Frequently, it is advantageous to determine the hemoglobin saturation in vivo. Although the arterial oxygen saturation in a perfused organ can be quantified, it is not possible to estimate the change in the hemoglobin oxygen concentration as it leaves an artery and enters the capillary bed; nor is it possible to determine the intermediate value of oxygen saturation in a particular capillary bed from the venous drainage since no technique has been devised for drawing a blood sample directly from the capillary bed.

In contrast to CW oximeters, time resolved spectroscopy (TRS-pulse) can measure directly the average pathlength of migrating photons as well as other tissue properties such as the absorption and scattering of light in tissue.

A TRS system irradiates tissue with pulses of light of 10-10 sec. duration that migrate through a path between an optical input port and an optical detection port. The shape of the input pulse is modified by the scattering and absorption properties of the tissue. The modified light is detected by a photo-multiplier, amplified and stored in a multichannel analyzer. The multichannel analyzer collects only a single photon for each input light pulse. A signal from

each detected photon is encoded for time delay and recorded. The pulses are accumulated over a relatively long time interval (on the order of 5 minutes) so that approximately 10^5 counts are collected at the detected pulse maximum. The relatively long counting time is required to obtain reasonable statistics so that a reasonable fit over three or four decades of the logarithmic slope on the detected pulse can be obtained.

For some applications, the relatively long collection time is a disadvantage. Furthermore, the instrumentation of the single photon counting TRS-pulse system is costly when compared with the CW systems. The relative complexity, cost, and size of the TRS-pulse system, of the embodiment illustrated in U.S. Patent No. 5,119,815, could present some barriers to marketing for certain applications in today's cost-conscious health care industry.

Thus, there is a need for a cost-effective time resolved spectroscopic system that requires a relatively short period of data accumulation for quantitative and qualitative tissue examination.

Summary of the Invention

In one aspect, the invention features a method and a system for examination of biological tissue of a subject using a light source, an optical detector, a gated integrator with an integrator timing control and a processor. The scattering and absorptive properties of the examined tissue are determined by photons migrating between an optical input port connected to the source and an optical detection port connected to the detector. The light source is adapted to introduce into the tissue, at the input port, pulses of electromagnetic radiation of a selected wavelength in the visible or infra-red range, the pulses having duration on the order of a nanosecond or less. The detector is adapted to detect, at the

detection port, photons of modified pulses that have migrated in the tissue from the input port. The gated integrator and the integrator timing control are adapted to integrate the photons over at least two selected time intervals separately spaced over the arrival time of the modified pulses. The processor is adapted to determine a physiological property of the examined tissue based on the number of photons integrated over each time interval.

Preferred embodiments of this aspect of the invention may include one or more of the following features.

The system further includes an additional gated integrator and integrator timing control adapted to integrate the photons over a selected time interval spaced over the arrival time of the modified pulses.

The processor can determine the absorption coefficient (μ_a) of the examined tissue based on the number of photons integrated over at least two selected time intervals separately spaced over the arrival time of the modified pulses.

The absorption coefficient is determined from the decay slope of the arrival time of the modified pulses.

The gated integrator, the integrator timing control and the processor are adapted to determine the delay time (t_{max}) between the introduced pulse and a time at which the detected profile of the corresponding modified pulse has a maximum value.

The processor is further adapted to determine the effective scattering coefficient $(1-g)\cdot\mu_s$ of the examined tissue using the formula:

$$(1-g)\,\mu_s=\frac{1}{\rho^2}\,(4\mu_a c^2 t_{max}^2+10 c t_{max})-\mu_a$$

wherein ρ is a distance between the input and detection ports and c is speed of light in the medium.

The light source is further adapted to introduce into the tissue, at the input port, the pulses of electromagnetic radiation of a second selected wavelength in the visible or infra-red range, and the detector is further adapted to detect, at the detection port, photons of modified pulses of the second wavelength that have migrated in the tissue from the input port. The gated integrator and the integrator timing control are further adapted to integrate the detected photons over at least two selected time intervals separately spaced over the arrival time of the modified pulses. The processor is further adapted to determine a physiological property of the examined tissue based on the number of photons integrated over each time interval for each selected wavelength.

The absorption coefficient (μ_a) of the examined tissue can be determined by the processor based on the number of photons integrated over at least two selected time intervals separately spaced over the arrival time of the modified pulses.

The processor is further adapted to determine concentration of a tissue pigment based on the absorption coefficients at each selected wavelength.

The processor is further adapted to determine the oxygen saturation Y based on the ratio of the absorption coefficients at two selected wavelengths.

The gated integrator and the integrator timing control are further adapted to integrate the detected photons over several selected time intervals separately spaced over the entire arrival time of the modified pulses, and the processor is further adapted to determine intensity profile of the modified pulses over the entire arrival time.

The processor is further adapted to determine a mean pathlength of the distribution of the photon migration pathlengths.

The determined pathlength is used to calibrate data measured by a continuous wave oximeter.

The light source includes a laser driven by a pulse generator and a pulser. The wavelength of the source is in the range of 600 nm to 1000 nm.

In a first aspect, this invention seeks to provide a system for examination of biological tissue of a subject, the scattering and absorptive properties of the examined tissue being determined by photons migrating between an optical input port and an optical detection port of said system, said system comprising:

an optical input port located at a first location to introduce light to the biological tissue;

an optical detection port located at a second location spaced apart from said input port and to receive light that has migrated in the biological tissue;

a light source coupled to the input port for introducing into the tissue, at the input port, pulses of photons of electromagnetic radiation of a selected wavelength in the visible or infra-red range, said pulses having duration on the order of a nanosecond or less and having original pulse shapes;

a detector, coupled to the detection port, for detecting photons of modified pulses that were introduced into the tissue

and have become modified from the original pulse shapes as a result of migrating in the tissue lying between said input and detection ports;

a gated integrator coupled to said detector and associated with an integrator timing control, for integrating the photons of a detected pulse over at least two selected time intervals spaced over the duration of said detected pulse; and

a processor, coupled to said integrator, for determining a physiological property of the examined tissue related to the tissue absorption and scattering properties based on the number of photons integrated over each time interval.

In a second aspect, this invention seeks to provide a method of examination of biological tissue of a subject, the scattering and absorptive properties of the examined tissue being determined by photons migrating between an optical input port and an optical detection port of said system, said method comprising the steps of:

introducing into the tissue, at the input port, pulses of electromagnetic radiation of a selected wavelength in the visible or infra-red range, said pulses having duration on the order of a nanosecond or less;

detecting, at the detection port, photons of modified pulses that have migrated in the tissue from the input port;

integrating said photons over at least two selected time intervals separately spaced over the arrival time of said modified pulses; and

determining a physiological property of the examined tissue based on the number of photons integrated over each time interval.

BRIEF DESCRIPTION OF THE DRAWING

FIG. 1 is a block diagram of a two gate integrator TRS-pulse system in accordance with one embodiment of the present invention.

FIG. 2 is a timing diagram of the system of FIG. 1.

FIG. 3 is a block diagram of a single integrator single wavelength TRS-pulse system in accordance with another embodiment of the present invention.

FIG. 4 is a block diagram of a multiple gate integrator TRS pulse system in accordance with another embodiment of the present invention.

FIG. 5 and 5A show a typical time resolved spectrum and a timing diagram for the system of FIG. 4, respectively.

FIG. 5B shows a time resolved spectrum of photons that migrated through tissue with regions of different absorption and scattering properties.

FIG. 6 is a block diagram of a TRS-pulse system utilizing an additional reference fiber adapted for time calibration.

FIG. 6A is a time resolved spectrum that includes a modified pulse and a reference pulse.

DESCRIPTION OF THE PREFERRED EMBODIMENT

FIG. 1 illustrates electronic components, consisting of a 0.5 nanosecond pulse generator (12) operating at 100 MHz and a pulse train at 100 MHz with a duration of 0.5 nanosecond. These pulses are alternately switched to the 670 nm laser diode (14) or to the 816 nm laser diode (16) to illuminate the subject (10), for example the forehead, at a frequency of 50 MHz. The output (20) is detected by an R928 PMT (22) connected to a wide band amplifier/impedance changer (24) and then to the two parallel pulse integrators (26 and 28). These pulse integrators are activated at the times corresponding to the illumination of the subject by the two wavelengths (670 and 816 nm). The trigger generator for this follows the timing diagram (FIG. 2) and consists of two trigger generating circuits (15, 17), each triggered by a diode pick up from the corresponding light source. Thus the integrators (26 and 28) are activated only when the particular light source is activated. Their outputs (27 and 29) are connected to the subtraction and ratio circuit (30), so that the output is the ratio of the two wavelengths, which, in turn, is connected to a simple computer (32) for saturation.

The gate and delay generator (19) operates in accordance with the timing diagram (FIG. 2) and consists of two generators, each separately triggered by the appropriate trigger pulse (alternatively, the same gate-generating components can be time shared with electronic switches).

A trigger pulse (36) obtained from the 670 nm light source sets off the timing diagram (34) to afford a delay

gate (38) for gate pulse 1 (40), which is from 2-2.7 nanoseconds. The gate triggers a pulse integrating circuit (26) which integrates detected photons (41). The same is done for the 816nm light source wherein the gate (19) triggers the second pulse integrating circuit (28). Subsequently, the delay time of delay gate 2 is chosen so that delay gate 2 (42) triggers gate pulse 2 (44) from 3.8-5.4 nanoseconds for pulses from the two light sources as described above.

An analog voltage is then available which represents this integral, which is then converted into logarithms with an analog (or digital) circuit. The result of these logarithms, divided by the known time difference between the two, gives, with proper scaling, μ_a for the particular wavelength - for example, 670 nm. Another wavelength is available, namely 816 nm, so that the μ_a values of the two wavelengths can be obtained and entered into the usual calculation for saturation (32).

Fig. 3 shows diagrammatically another implementation of the "boxcar" simplified TRS system that uses a single integrator for the gated photon signal integration. A pulse generator 52 operating at a frequency on the order of 100 MHz connected to a pulser 54 drives a laser 56 (e.g., Hamamatsu PLP-10 pulsed laser diode). Laser 56 generates a train of light pulses of a selected wavelength (e.g., 754 nm) and constant duration on the order of 100 psec (Pulses of the order of a nanosecond can also be used). The light pulses are coupled to an optical fiber 58 and are introduced to subject 50 at an input port. Transmitted photons migrate in the subject and arrive at a detection port of an optical fiber 60. In the migration process, the input pulse has been modified by the scattering and absorptive properties of tissue of subject 50. Photons arriving at the detection port are transmitted to a detector 62, (for

example, Hamamatsu photomultipliers R928, R1517, MCP R1712, R1892 or other).

The output of detector 62 is amplified in a wide band preamplifier/impedance changer 64 and coupled to a boxcar integrator 66. Integrator 66 activated by a pulse gate collects all arriving photons over a predetermined time interval. The integrator output (72) is sent to computer interface module 74. Computer 76 stores the total number of counts detected during the collection interval of integrator 66.

Integrator 66 includes a trigger 65 that is triggered by a signal 55 from pulser 54. Trigger 65 activates a delay gate 67 that, in turn, starts counting of all detected photons during the time interval specified by a gate width circuit 69. Output from a gate width normalizer 71 is an analog signal or a digital signal representing all photons that arrived at the detection port during the preselected gate width interval. A suitable integrator can be achieved by using SR 250 manufactured by Stanford Research Systems.

Depending on the application, computer 76 sets the delay time of delay gate 67 and the gate width time of gate width circuit 69. The system can scan integration gate widths over the whole time profile of the detected pulse. Gate width normalizer 71 adjusts the width of the integration time depending on the detected signal level. The gate width may be increased logarithmically for smaller signals in accordance with the exponential decay of the fall of the detected pulse; this increases the signal to noise ratio. The system operates at a repetition rate of at least 10KHz.

Referring to Fig. 4, alternatively, multiple (at least three), parallel integrators are used in a faster and more efficient system. This system, same as the system of FIG. 3, may be used to determine the whole

profile of the detected pulse (89) shown in Fig. 5, by appropriately selecting the delay gates and the gate widths.

Pulse generator 52 connected to a pulser 54 drive alternately laser 56 and 57. The alternate coupling is provided by a switcher 53 that operates at frequencies on the order of 10^7Hz. Pulses of light of wavelength in the visible or infra-red range and duration 10^{-9} to 10^{-10} second are alternately coupled to subject 10 via optical fibers 98 or other light guide. The light pulses are modified by tissue of subject 50 positioned between the input port of fiber 98 and the detection port of fiber 100. The modified pulses are detected by detector 102 and the detected signal is amplified by preamplifier 104. Integrators 80, 82, and 84 collect data during selected gate width intervals, as shown on the timing diagram of Fig. 5A. Trigger 55 correlated with the input pulse, triggers delay gates 1, 2, and 3 (shown in Fig. 5A) that are set to have selected delay times. Each delay gate then triggers its corresponding integrator that collects all photons that arrive at the detector during the delay width time. Each integrator collects photons arriving at the detection port during its integration time defined by the gate width. This configuration can achieve a repetition rate of at least 10 kHz.

The gate arrangement of FIGS. 5 and 5A uses gates 91 and 95 to detect the decay slope of the signal while the third gate 99 may be used to determine the background signal. Outputs 92 and 96 of integrators 80 and 82 are used to calculate the slope.

To obtain approximately equal signal-to-noise ratios in the individual integrators, the length of the time windows is tailored to an exponential decay of the signal intensity with a logarithmic increase in the gate width with delay time.

Referring to FIGS. 5 and 5A, by scanning the delay gates (90, 94, and 98) and appropriately adjusting the gate widths, the system collects data corresponding to the entire detected pulse; subsequently, the shape (89) of the detected pulse is then calculated, i.e., time dependent light intensity profile I(t) is determined. The detected pulse shape, I(t), possesses information about the scattering and absorption properties of the examined tissue, which are closely related to the distribution of photon pathlengths in the tissue. The optical field is a function of the input-output port separation (ρ) as well as the optical properties of the tissue (absorption coefficient, μ_a, scattering coefficient, μ_s, and the mean cosine of anisotropic scattering, g). The general diffusion equation is used to describe the photon migration in tissue, as described by E. M. Sevick, B. Chance, J. Leigh, S. Nioka, and M. Maris in Analytical Biochemistry 195, 330 (1991).

The system utilizes a previously determined solution for the fluence distribution in an infinite media as a Green's function with near infinite boundary conditions, wherein the diffusion equation is solved for the intensity of detected light in the reflectance geometry, $R(\rho,t)$, or the transmittance geometry $T(\rho,d,t)$. In the reflectance arrangement in a semi-infinite media with the separation of the input and output ports on the order of centimeters the reflectance was determined as follows:

wherein ρ is the separation between input and detection ports and c is speed of light in the medium.

For $t \rightarrow \infty$ the absorption coefficient μ_a is determined as follows:

In cases where the approximation of infinite time is not valid, Eq. 2 can be rewritten to obtain μa as follows:

The value for D can either be an average value for tissue or a value specific to tissue type being measured such as head or breast.

The effective scattering coefficient (1-g) μs is determined as follows:

wherein t_{max} is the delay time at which the detected reflectance time profile (R(ρ,t) ≡ I(t)) reaches maximum. The right hand side of Eq. 3 is the decay slope of the arrival time of the modified pulses.

The systems of FIGS. 1, 3, and 4 enable direct, real-time output of the absorption coefficient μ_a, tissue saturation (Y), average optical pathlength (<L>), and the scattering coefficient μ_s. The absorption coefficient is quantified by evaluating the decaying slope of the detected pulse, as described in Eq. 3. The effective scattering coefficient, $(1-g)\cdot\mu_s$, is determined from Eq. 5.

As stated above, the intensity profile of the detected pulse, I(t), is strongly dependent on the absorption and scattering properties of the examined tissue. For a relatively homogeneous tissue (e.g., breast tissue), the detected pulse, in general, exhibits a single exponential decay (FIG. 5). In cases wherein the light pulse migrates through different types of

tissues (e.g., brain tissue that includes the white matter and the gray matter), the detected profile (I(t)) includes "two or more superimposed pulses", each characteristic of one type of tissue (Note pulse shapes 105, 106, and 107 in FIG. 5B). The TRS system of FIGS. 1, 2 or 3 scans the delay gates over the entire arrival time delay of the migrating photons to collect and deconvolute the intensity profile, I(t). A computer processor then fits iteratively the intensity profile to two or more overlapping curves and determines the scattering and absorption coefficients for each tissue effectively using Eqs. (3) and (5).

Photons introduced at the detection port are scattered on their migration path that depends on the number of scattering events. In highly scattering tissue, the time-of-flight of photons is the longest and photons have the greatest probability of penetrating larger volumes of tissue. The time-of-flight (or mean time <t>) is proportional to the pathlengths travelled by the photons, assuming that they travel at a speed c/n (wherein c is the speed of light in vacuum and n ≈ 1.36 is the average refractive index of tissue). From the detected and deconvoluted photon intensity profile, I(t), a mean pathlength of the distribution of pathlengths is determined as follows:

$$\langle L\rangle = \frac{c}{n}\frac{\int_0^{\infty} I(t)\, t\, \partial t}{\int_0^{\infty} I(t)\, \partial t} \qquad (6)$$

Photon migration theory predicts that the detected photons can be represented by a three dimensional "banana-shaped" distribution pattern in the reflection geometry or a "cigar-shaped" distribution pattern in the transmission geometry. The concavity or shallow boundary is due to the escape of photons that reach the air-scatterer interface while the deeper boundary is due to

attenuation of long path photons by the absorbers. If the tissue absorption properties are nonuniform, for example, when an absorbing object such as bleeding or a tumor is present, then the distribution of pathlength is also nonuniform.

The optical field is moved through tissue by increasing ρ to achieve deeper field penetration or by moving the input port and the detection port in a scanning motion.

When the absorbing object is infinitely far away from the field, it does not alter the banana-shaped optical field. As the optical field is moved closer to the strongly absorbing object, the photons which have migrated the farthest distance from the input and detection ports are eliminated by the absorption process inside the absorber. Since photons with the longest pathlengths are absorbed, the approach of the field to the absorbing object shortens the distribution of pathlengths, detected as reduction in the average pathlength <L>. As the optical field moves even closer to the absorbing object, some of the detected photons can migrate around the object without being absorbed; this is detected as lengthening of the distribution of pathlengths. Thus, the average pathlength measurement reveals location of a strongly absorbing component of a tissue (e.g., tumor or localized bleeding); this is one way how the tissue absorbing component can be imaged.

Alternately, localization of an absorbing (or transparent) tissue component can be performed by moving the input port and the detection port on the subject and then creating two dimensional maps of absorption coefficients, scattering coefficients, saturation values, etc.

In the TRS system that includes two wavelengths sensitive to hemoglobin (Hb) and oxyhemoglobin (HbO_2)

(e.g., 754nm and 816nm), the hemoglobin saturation (Y) is calculated by taking the ratio of absorption coefficients and using the following equation for the oxygen saturation:

$$Y(X100\%) = \frac{38 - 18\frac{\mu_a^{754}}{\mu_a^{816}}}{25 + 3\frac{\mu_a^{754}}{\mu_a^{816}}} \qquad (7)$$

wherein the coefficients are determined from the extinction values of hemoglobin at 754 nm and 816 nm that are $\varepsilon_{Hb} = 0.38\ cm^{-1}\ mM^{-1}$, $\varepsilon_{Hb} = 0.18\ cm^{-1}mM^{-1}$, respectively, and the difference extinction coefficients between oxyhemoglobin and hemoglobin that are $\Delta\varepsilon_{HbO-Hb} = 0.025\ cm^{-1}\ mM^{-1}$ and $\Delta\varepsilon_{HbO-Hb} = 0.03\ cm^{-1}\ mM^{-1}$, respectively.

A single wavelength system of FIGS. 1, 3, and 4 can be employed for determination of the optical pathlength of photons migrating in tissue for use with CW oximeters. The pathlength is used in conjunction with the attenuation data (I/I_0) from the oximeters to quantitatively calculate the concentration of oxyhemoglobin using Eq. 1.

To account for difference between the geometric distance (ρ) of the input port and the detection port and the pathlength (<L>), some oximeters use a modified Beer-Lambert equation with a differential pathlength factor (DPF) as follows:

$$absorbance = DPF.\epsilon.[C] \qquad (7)$$

wherein [C] is the concentration of an absorbent constituent. The differential pathlength factor can not be precisely determined by the CW oximeters since it depends on the pathlength, but it can be determined using the absorption (μ_a) and scattering (μ_s) coefficients as follows: Thus a TRS system can be used to calibrate a CW

$$DPF = \frac{\sqrt{3}}{2}\sqrt{\frac{(1-g)\,\mu_s}{\mu_a}} \qquad (8)$$

oximeter to quantify the measured data.

In the studies of the brain, the TRS-pulse system is used to obtain the scattering (μ_a) and absorption (μ_s) coefficients at each wavelength on the white and grey matter. The absorption factors are used to determine oxygen saturation which is then used to detect hypoxia, localized bleeding and other reversible or irreversible disorders. The scattering changes in the examined tissue could be a manifestation of perinventrical hyperintense syndrome (PVH), Alzheimer's disease manifested as plaques and tangles embedded in the grey matter and others.

As implied in the earlier description, it is desirable to precisely determine the delay time of the detected pulse. In systems of Figs 1, 3, and 5, the pulser sends directly a trigger signal to each boxcar integrator. In the single photon counting TRS-pulse system, described in the above-cited patent application, the pulser sends a trigger signal to the time-to-amplitude converter when a pulse is emitted from the laser. However, when it is desirable to verify the time delay of the detected pulse, a third, reference fiber of known length, connected to the PMT detector, is positioned next to the input port. The detected reference pulse has a delay proportional to the length of reference fiber, and thus the time delay can be calibrated.

Fig. 6 shows a block diagram of the dual wavelength TRS-pulse system adapted to reference the timing of the input pulse. Laser diodes 122, 124 (e.g., Hamamatsu PLP 10 laser diode) are driven by a 100 MHz pulse generator 118 connected to a 5 mW pulser 119. The light from lasers 122, 124 is time shared electro-

mechanically by a 60 Hz vibrating mirror 126 so that they alternately illuminate a fiber coupler 128 that conducts pulses of light into subject 10. Photons migrate through the subject 10 to a detection port of a fiber 127 and to the detector 110 that is a photomultiplier. Additionally, a reference fiber 129 of known length is located at the input port of fiber 128 and is also connected to detector 110.

The output of photomultiplier tube 110 is directly connected to a wide band amplifier 112 with appropriate roll-off to give good pulse shape and optimal signal to noise ratio. A high/low level discriminator 113 receives an output signal from amplifier 112. Discriminator 113 is a pulse amplitude discriminator wherein the threshold for acceptance of a pulse is a constant fraction of the peak amplitude of the pulse. Next, the discriminator pulses are sent to a time-to-amplitude convertor (TAC) 114. The time-to-amplitude convertor produces an output pulse with amplitude proportional to the time difference between start and stop pulses. The pulse - photon detection cycle is repeated at frequency on the order of 10 MHz to acquire a typical photon distribution. The multichannel analyzer collects only a single photon for each input light pulse. Signal from each detected photon is encoded for time delay and recorded. Following the time to amplitude conversion, the counts corresponding to the two wavelengths are separately summed in two multichannel analyzers (MCA) 130, 132, respectively. As shown in Fig. 6A, each multichannel analyzer collects and stores the time resolved spectrum that consists of detected pulse (142) modified by the examined tissue and reference pulse (140) collected by reference fiber 129 (FIG. 6). Since reference fiber 129 is located at the input port of fiber 128, the delay of the reference pulse is proportional to the known length of reference fiber

129. By comparing the known delay time of the reference pulse with the detected delay time of the reference pulse (140), the time scale of the scattered pulse (142) can be precisely calibrated.

Further embodiments are within the scope of the following claims:

Claims

1. A system for examination of biological tissue of a subject, the scattering and absorptive properties of the examined tissue being determined by photons migrating between an optical input port and an optical detection port of said system, said system comprising:

an optical input port located at a first location to introduce light to the biological tissue;

an optical detection port located at a second location spaced apart from said input port and to receive light that has migrated in the biological tissue;

a light source coupled to the input port for introducing into the tissue, at the input port, pulses of photons of electromagnetic radiation of a selected wavelength in the visible or infra-red range, said pulses having duration on the order of a nanosecond or less and having original pulse shapes;

a detector, coupled to the detection port, for detecting photons of modified pulses that were introduced into the tissue and have become modified from the original pulse shapes as a result of migrating in the tissue lying between said input and detection ports;

a gated integrator coupled to said detector and associated with an integrator timing control, for integrating the photons of a detected pulse over at least two selected time intervals spaced over the duration of said detected pulse; and

a processor, coupled to said integrator, for determining a physiological property of the examined tissue related to the

tissue absorption and scattering properties based on the number of photons integrated over each time interval.

2. The system of claim 1 further comprising a second gated integrator, coupled to said detector, and associated with a second integrator timing control for integrating said photons over a selected time interval spaced over the duration of said detected pulse.

3. The system of claim 1 further comprising:

a second light source, optically coupled to said input port, for introducing into the tissue pulses electromagnetic radiation of a second visible or infra-red wavelength;

said detector further constructed to detect photons of said second wavelength that have migrated in the tissue from said input port to said detection port;

said gated integrator and said integrator timing control further constructed to integrate signals corresponding to said detected photons of said second wavelength over at least two selected time intervals spaced apart over the duration of said pulse; and

said processor further adapted to determine said physiological property of the examined tissue based on the number of photons integrated over each time interval for each said wavelength.

4. The system of claim 1, 2 or 3 wherein said physiological property is absorption coefficient (μ_a) of the

examined tissue determined by said processor based on the number of photons integrated over at least two selected time intervals separately spaced over the duration of said detected pulse.

5. The system of claim 4 wherein said absorption coefficient is determined from the decay slope of said detected pulse for the times substantially away from the maximum delay time (t_{max}) at which said corresponding modified pulse has the maximum intensity.

6. The system of claim 5 wherein said absorption coefficient is determined using the following formula:

$$\mu_a c = -\frac{d}{dt}\log_e R(\rho,t) + \frac{\rho^2}{4Dct} - \frac{5}{2t}$$

wherein $d[\log_e R(\rho,t)]/dt$ is determined from the decay slope of the duration of said modified pulses, D is diffusion coefficient for the examined tissue, c is speed of migrating photons, ρ is the distance between said input and detection ports, and t is the time relatively close to the maximum delay time (t_{max}).

7. The system of claim 6 wherein said gated integrator, said integrator timing control, and said processor are adapted to determine the delay time (t_{max}) between said introduced pulse and a time at which said corresponding modified pulse has the maximum intensity.

8. The system of claim 7 wherein said processor is further adapted to determine the effective scattering coefficient $(1-g).\mu_s$ of the examined tissue using the following formula:

$$(1-g)\mu_s = \frac{1}{\rho^2}(4\mu_a c^2 t_{\max}^2 + 10 c t_{\max}) - \mu_a$$

wherein ρ is a distance between said input and detection ports and c is speed of light.

9. The system of claim 1, 2, 4, 5, 6, 7 or 8 wherein said light source is further adapted to introduce into the tissue, at said input port, said pulses of electromagnetic radiation of a second visible or infra-red wavelength;

said detector further adapted to detect photons of said second wavelength that have migrated in the tissue from said input port to said detection port;

said gated integrator and said integrator timing control further adapted to integrate said detected photons over at least two selected time intervals separately spaced over the duration of said modified pulse; and

said processor further adapted to determine said physiological property of the examined tissue based on the number of photons integrated over each time interval for each said wavelength.

10. The system of claim 9 wherein said physiological property is absorption coefficient (μ_a), at each said wavelength, determined by said processor.

11. The system of claim 10 wherein said processor is further adapted to determine concentration of a tissue pigment based on said absorption coefficients determined at each selected wavelength.

12. The system of claim 10 wherein said processor is further adapted to determine the oxygen saturation Y based on the ratio of said absorption coefficients determined at said two wavelengths.

13. The system of claim 1, 2 or 3 wherein said gated integrator and said integrator timing control are further adapted to integrate said detected photons over several selected time intervals separately spaced over the entire the duration of said pulse; and

said processor further adapted to determine intensity profile over the entire pulse modified by photon migration in the tissue.

14. The system of claim 13 wherein said processor is further adapted to fit said determined intensity profile to at least two curves corresponding to at least two intensity profiles of two pulses modified by the tissue.

15. The system of claim 1, 2 or 3 wherein said processor is adapted to determine a mean pathlength of the distribution of the photon migration pathlengths.

16. The system of claim 15 further comprising a continuous wave oximeter, and wherein said processor is coupled to provide data to said continuous wave oximeter and wherein said determined mean pathlength is used to calibrate data measured by said continuous wave oximeter.

17. The system of claim 1, 2 or 3 wherein at least one of said light sources comprises a laser driven by a pulse generator and a pulser.

18. The system of claim 1, 2 or 3 wherein at least one of said wavelengths is in the range of 600 nm to 1000 nm.

19. The system of claim 1, 2 or 3 wherein said detector includes a photomultiplier tube.

20. The system of claim 1, 2 or 3 wherein said gated integrator includes a boxcar integrator.

21. The system of claim 1, 2 or 3 further including means for moving said input port on said subject.

22. The system of claim 1, 2 or 3 further including means for moving said detection port on said subject.

23. The system of claim 21 or 22 wherein said processor in arranged to create a two-dimensional map.

24. The system of claim 23 wherein said processor in arranged to create said two-dimensional map comprising the absorption coefficients of the examined tissue.

25. The system of claim 23 wherein said processor in arranged to create said two-dimensional map comprising the scattering coefficients of the examined tissue.

26. The system of claim 23 wherein said processor in arranged to create said two-dimensional map comprising the saturation values of the examined tissue.

27. A method of examination of biological tissue of a subject, the scattering and absorptive properties of the examined tissue being determined by photons migrating between an optical input port and an optical detection port of said system, said method comprising the steps of:

introducing into the tissue, at the input port, pulses of electromagnetic radiation of a selected wavelength in the visible or infra-red range, said pulses having duration on the order of a nanosecond or less;

detecting, at the detection port, photons of modified pulses that have migrated in the tissue from the input port;

integrating said photons over at least two selected time intervals separately spaced over the arrival time of said modified pulses; and

determining a physiological property of the examined tissue based on the number of photons integrated over each time interval.

28. The method of claim 27 wherein said integrating said photons over at least two selected time intervals comprises using two gated integrators, coupled to a detector, and associated with two integrator timing controls.

29. The method claim 27 or 28 wherein said physiological property is absorption coefficient (μ_a) of the examined tissue determined based on the number of photons integrated over at least two selected time intervals separately spaced over the arrival time of said modified pulses.

30. The method of claim 27 or 28 wherein said absorption coefficient is determined from the decay slope of the arrival time of said modified pulses for time substantially away from the maximum delay time (t_{max}).

31. The method of claim 30 wherein said absorption coefficient is determined using the formula:

$$\mu_a c = -\frac{d}{dt}\log_e R(\rho,t) + \frac{\rho^2}{4Dct} - \frac{5}{2t}$$

wherein $d[\log_e R(\rho,t)]/dt$ is determined from the decay slope of the arrival time of said modified pulses, D is diffusion coefficient for the examined tissue, c is speed of migrating photons, ρ is the distance between said input and detection ports, and t is the time relatively close to the maximum delay time (t_{max}).

32. The method of claim 29 further comprising the step of determining a delay time (t_{max}) between said introduced pulse and a time at which said detected profile of said corresponding modified pulse has a maximum.

33. The method of claim 32 further comprising the step of determining the effective scattering coefficient (1-g)?μ_s of the

$$(1-g)\mu_s = \frac{1}{\rho^2}(4\mu_a c^2 t_{max}^2 + 10 c t_{max}) - \mu_a$$

examined tissue using the formula:
wherein ρ is a distance between said input and detection ports and c is speed of light in the tissue.

34. The method of claim 27 further comprising the step of introducing into the tissue, at said input port, said pulses of electromagnetic radiation of a second selected wavelength in the visible or infra-red range;

detecting, at said detection port, photons of modified pulses of said second wavelength that have migrated in the tissue from said input port;

integrating said detected photons over at least two selected time intervals separately spaced over the arrival time of said modified pulses; and

determining a physiological property of the examined tissue based on the number of photons integrated over each time interval for each selected wavelength.

35. The method of claim 34 wherein said physiological property is absorption coefficient (μ_a) at each selected wavelength and said step of determining is performed by said processor based on the number of photons integrated over at least two selected time intervals separately spaced over the arrival time of said modified pulser.

36. The method of claim 35 further comprising the step of determining concentration of a tissue pigment based on said absorption coefficients at each selected wavelength.

37. The method of claim 36 further comprising the step of determining the oxygen saturation Y based on the ratio of said absorption coefficients at two selected wavelengths.

38. The method of claim 27 wherein said integrating step is performed to collect detected photons over several selected time intervals separately spaced over the entire arrival time of said modified pulses; and further comprising the step of

determining intensity profile of said modified pulses over the entire arrival time.

39. The method of claim 38 further comprising the step of determining a mean pathlength of the distribution of the photon migration pathlengths.

40. The method of claim 39 further comprising the step of calibrating data measured by a continuous wave oximeter using said mean pathlength.

41. The method of claim 27 wherein said frequency is in the range of 600 nm to 1000 nm.

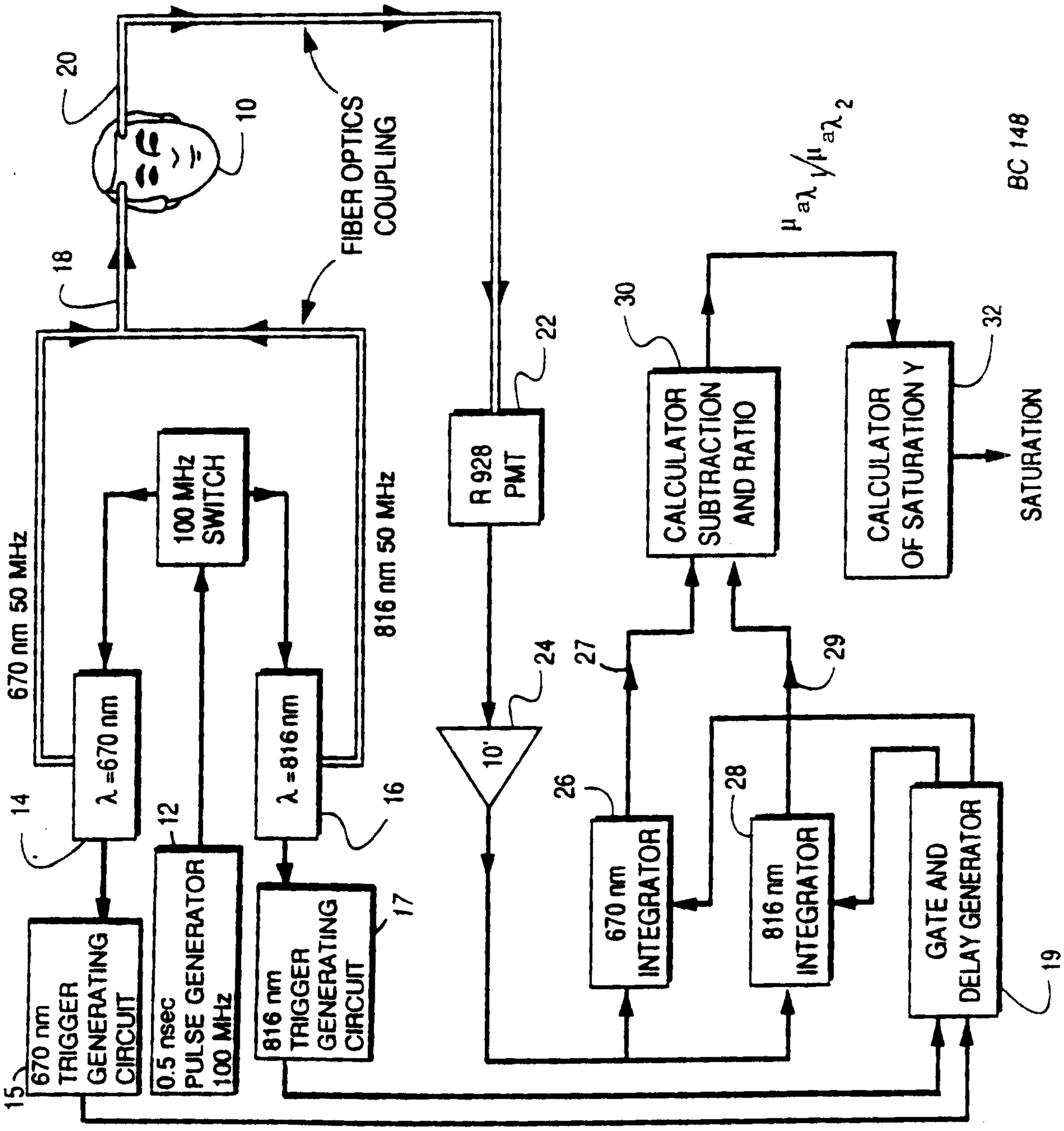
20
10
18
FIBER OPTICS COUPLING
22
R 928 PMT
24
10'
30
CALCULATOR SUBTRACTION AND RATIO
$\mu_{a\lambda_1}/\mu_{a\lambda_2}$
32
CALCULATOR OF SATURATION Y
SATURATION
BC 148
670 nm 50 MHz
816 nm 50 MHz
100 MHz SWITCH
14
λ =670 nm
12
λ =816 nm
16
0.5 nsec PULSE GENERATOR 100 MHz
670 nm TRIGGER GENERATING CIRCUIT
816 nm TRIGGER GENERATING CIRCUIT
17
15
26
27
28
29
670 nm INTEGRATOR
816 nm INTEGRATOR
GATE AND DELAY GENERATOR
19

FIG. 1

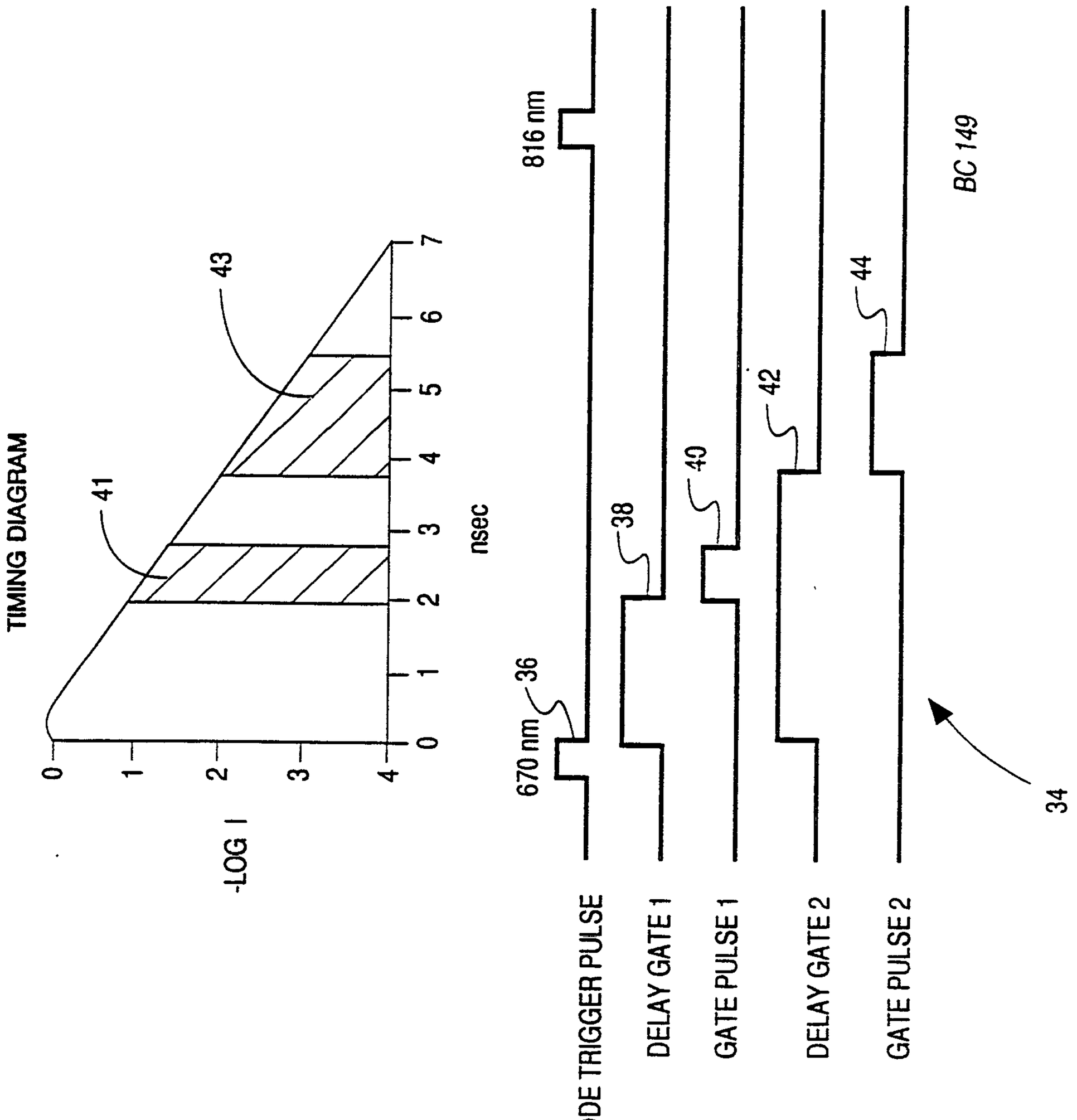
TIME RESOLVED TIMING DIAGRAM
41
43
0
1
2
3
4
-LOG I
0
1
2
3
4
5
6
7
nsec
816 nm
38
40
42
44
BC 149
670 nm
36
DIODE TRIGGER PULSE
DELAY GATE 1
GATE PULSE 1
DELAY GATE 2
GATE PULSE 2
34

FIG. 2

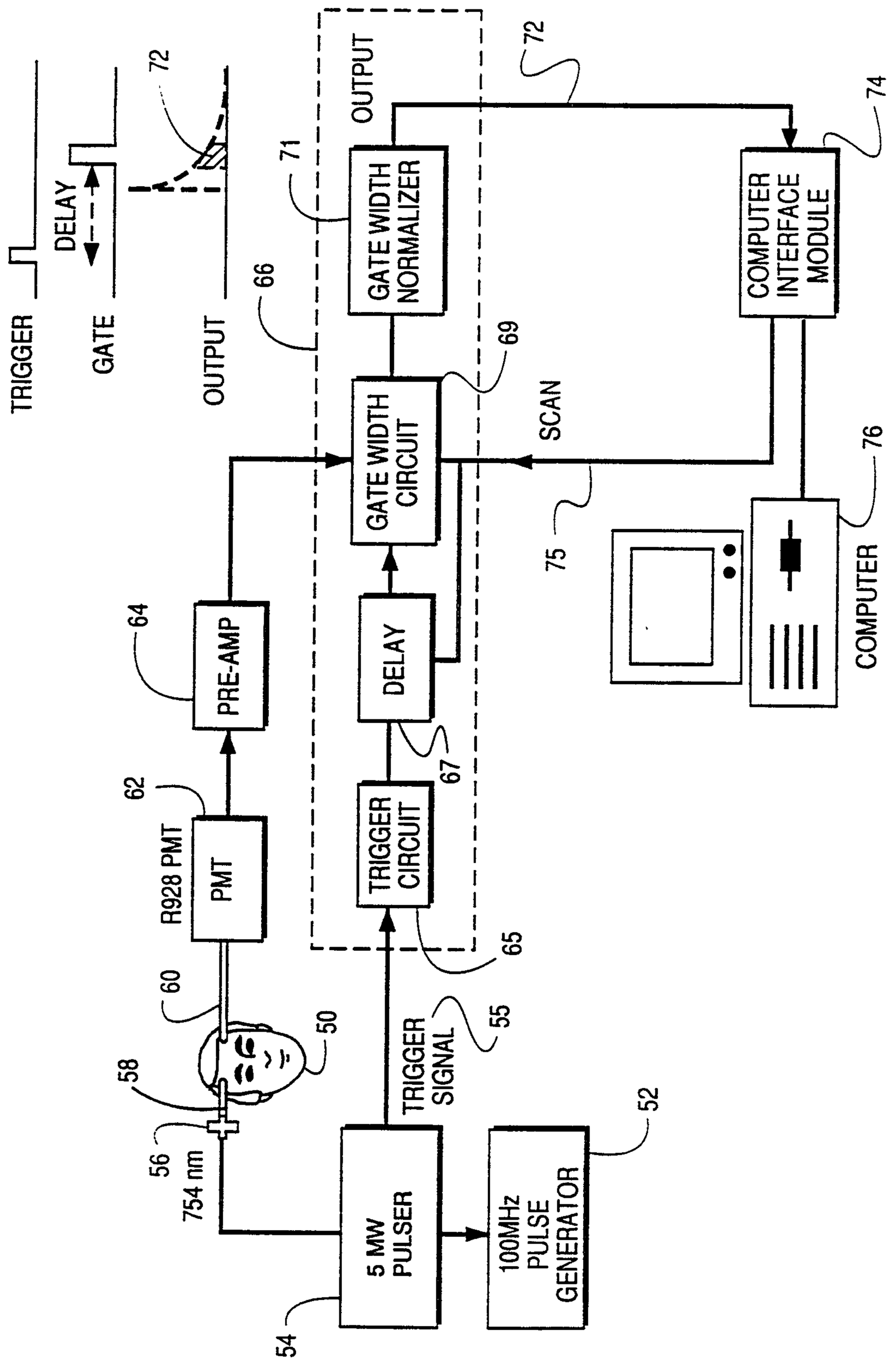
TRIGGER
DELAY
GATE
OUTPUT
72
71
66
OUTPUT
GATE WIDTH NORMALIZER
74
COMPUTER INTERFACE MODULE
69
SCAN
GATE WIDTH CIRCUIT
76
75
COMPUTER
64
PRE-AMP
62
R928 PMT
PMT
60
DELAY
67
TRIGGER CIRCUIT
65
50
58
TRIGGER SIGNAL
55
56
754 nm
5 MW PULSER
100MHz PULSE GENERATOR
52
54

FIG. 3

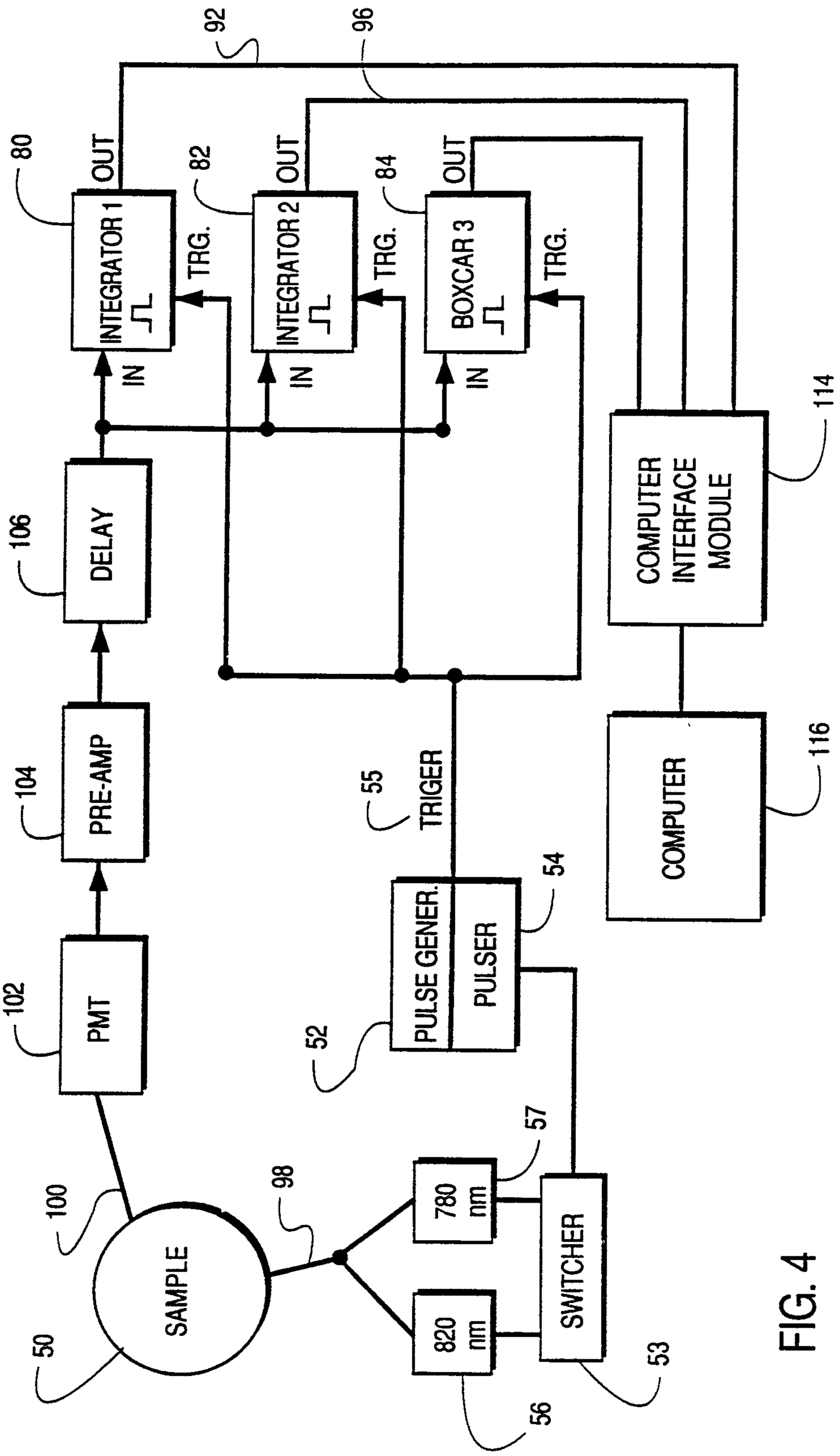
92
96
80
OUT
INTEGRATOR 1
TRG.
IN
82
OUT
INTEGRATOR 2
TRG.
IN
84
OUT
BOXCAR 3
TRG.
IN
106
DELAY
104
PRE-AMP
102
PMT
114
COMPUTER INTERFACE MODULE
116
COMPUTER
55
TRIGER
54
PULSE GENER.
PULSER
52
57
780 nm
820 nm
SWITCHER
53
56
98
100
SAMPLE
50

FIG. 4

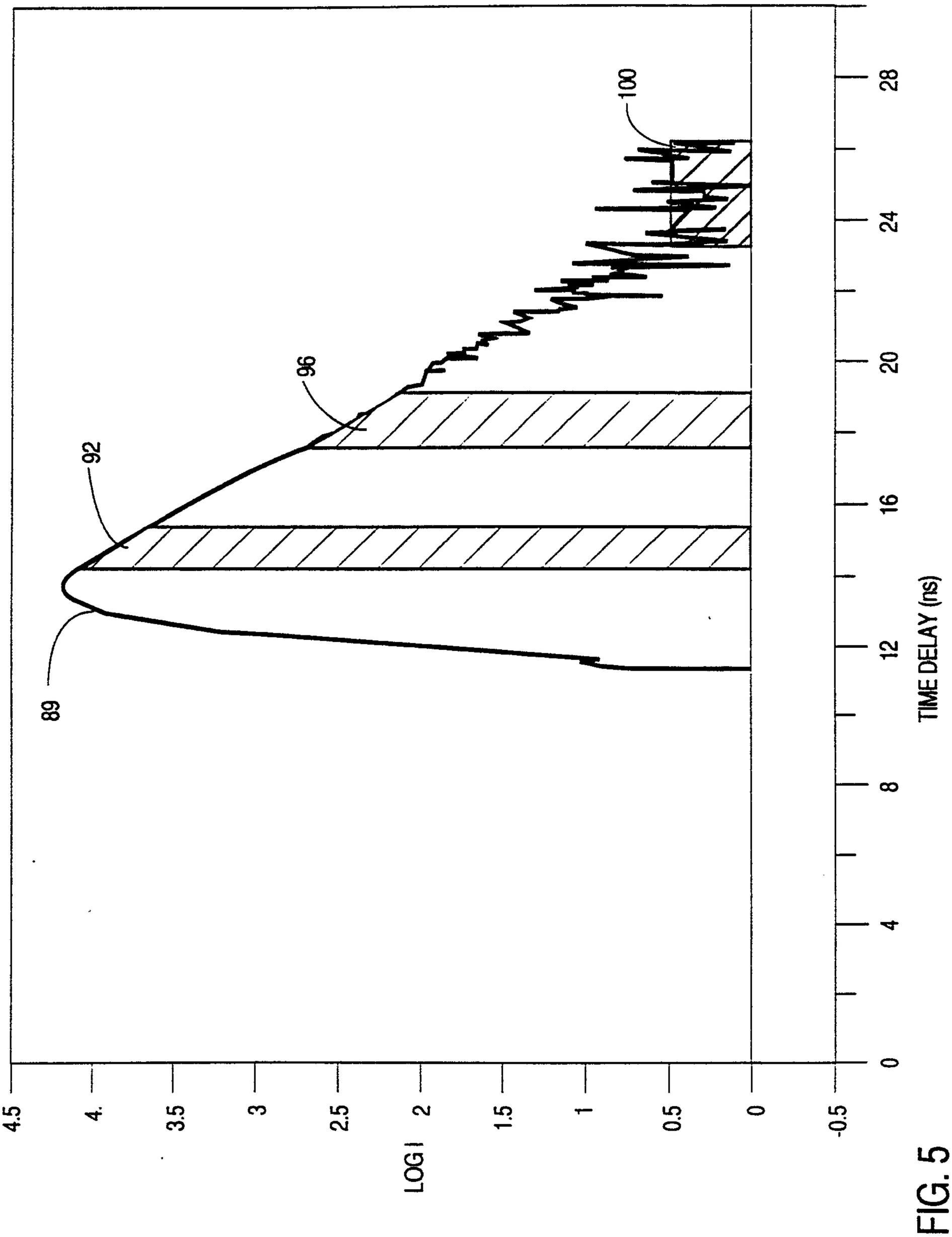
89
92
96
100
TIME DELAY (ns)
0
4
8
12
16
20
24
28
LOG I
4.5
4.
3.5
3
2.5
2
1.5
1
0.5
0
-0.5

FIG. 5

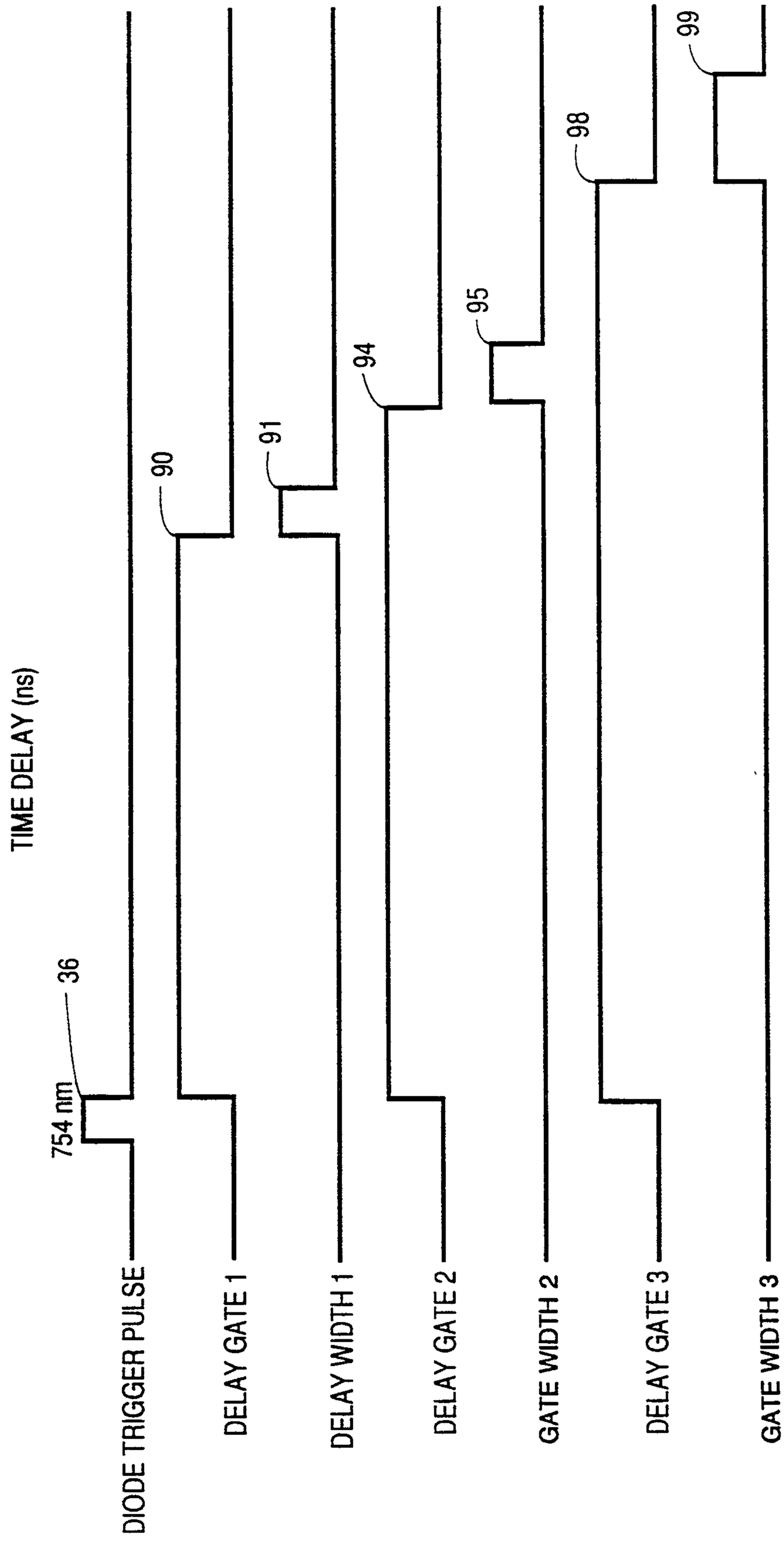
TIME DELAY (ns)
754 nm
36
90
91
94
95
98
99
DIODE TRIGGER PULSE
DELAY GATE 1
DELAY WIDTH 1
DELAY GATE 2
GATE WIDTH 2
DELAY GATE 3
GATE WIDTH 3

FIG. 5A

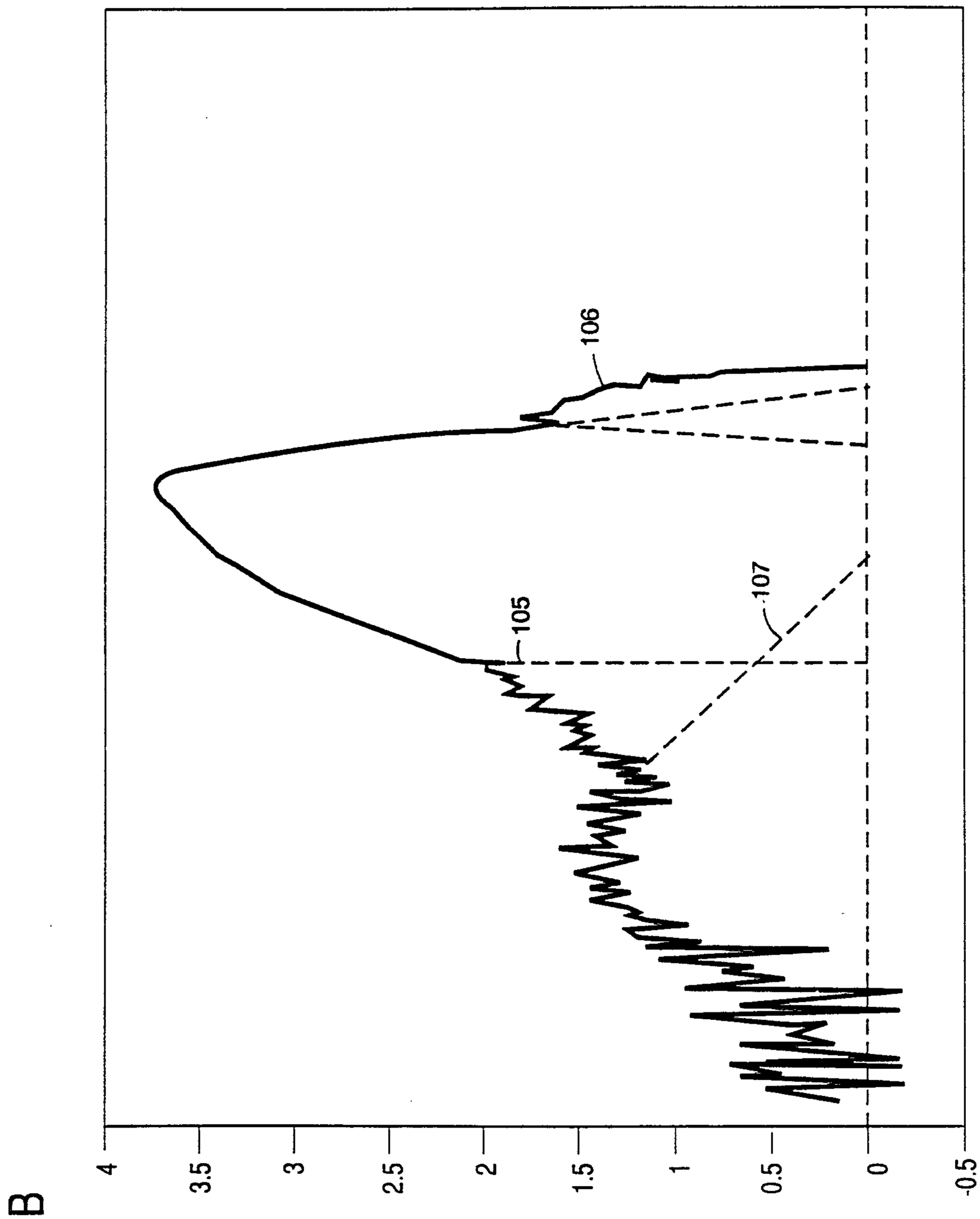

FIG. 5B

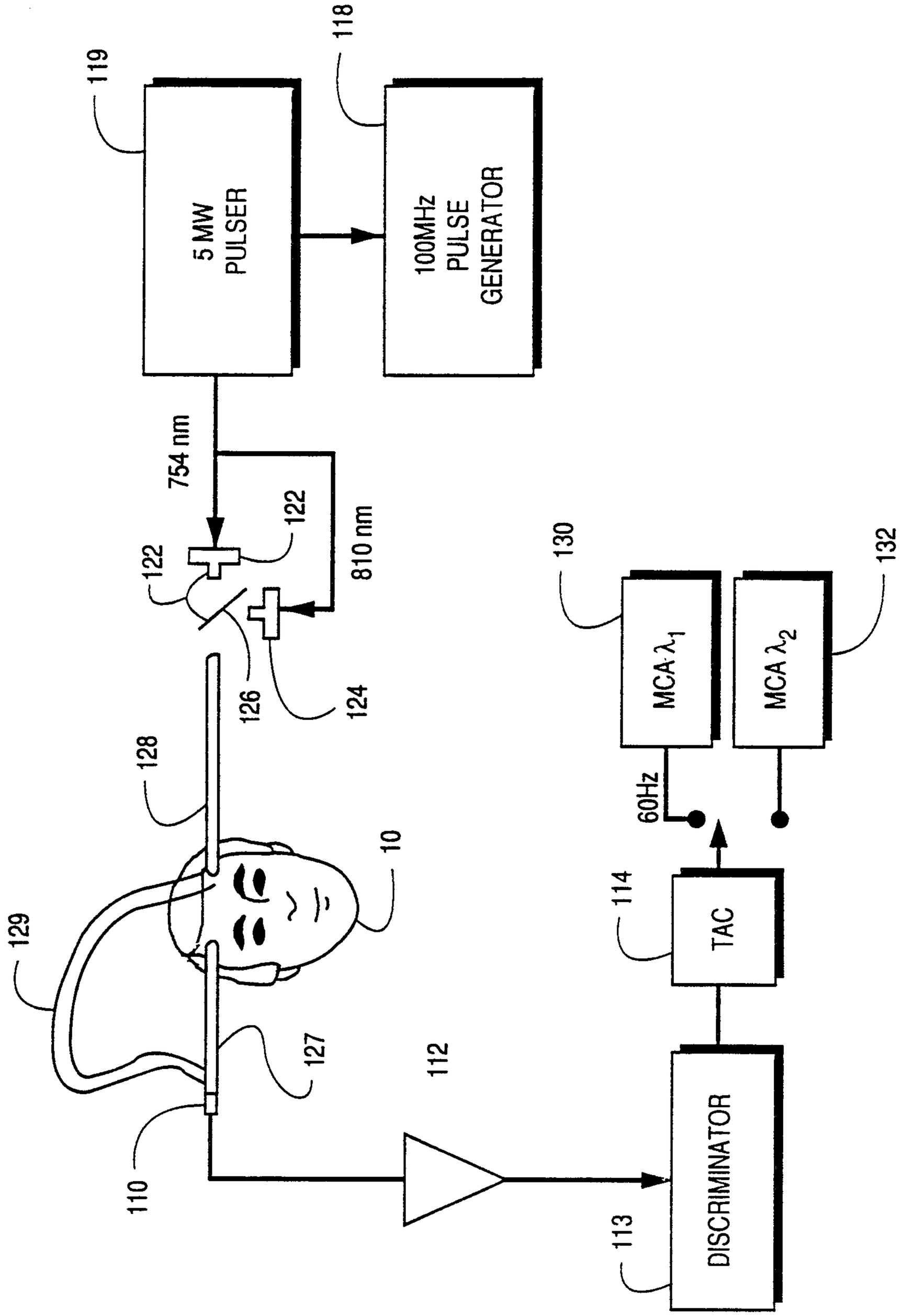
119
5 MW PULSER
118
100MHz PULSE GENERATOR
754 nm
122
122
810 nm
126
124
128
10
129
127
112
110
130
132
MCA λ_1
MCA λ_2
60Hz
114
TAC
113
DISCRIMINATOR

FIG. 6

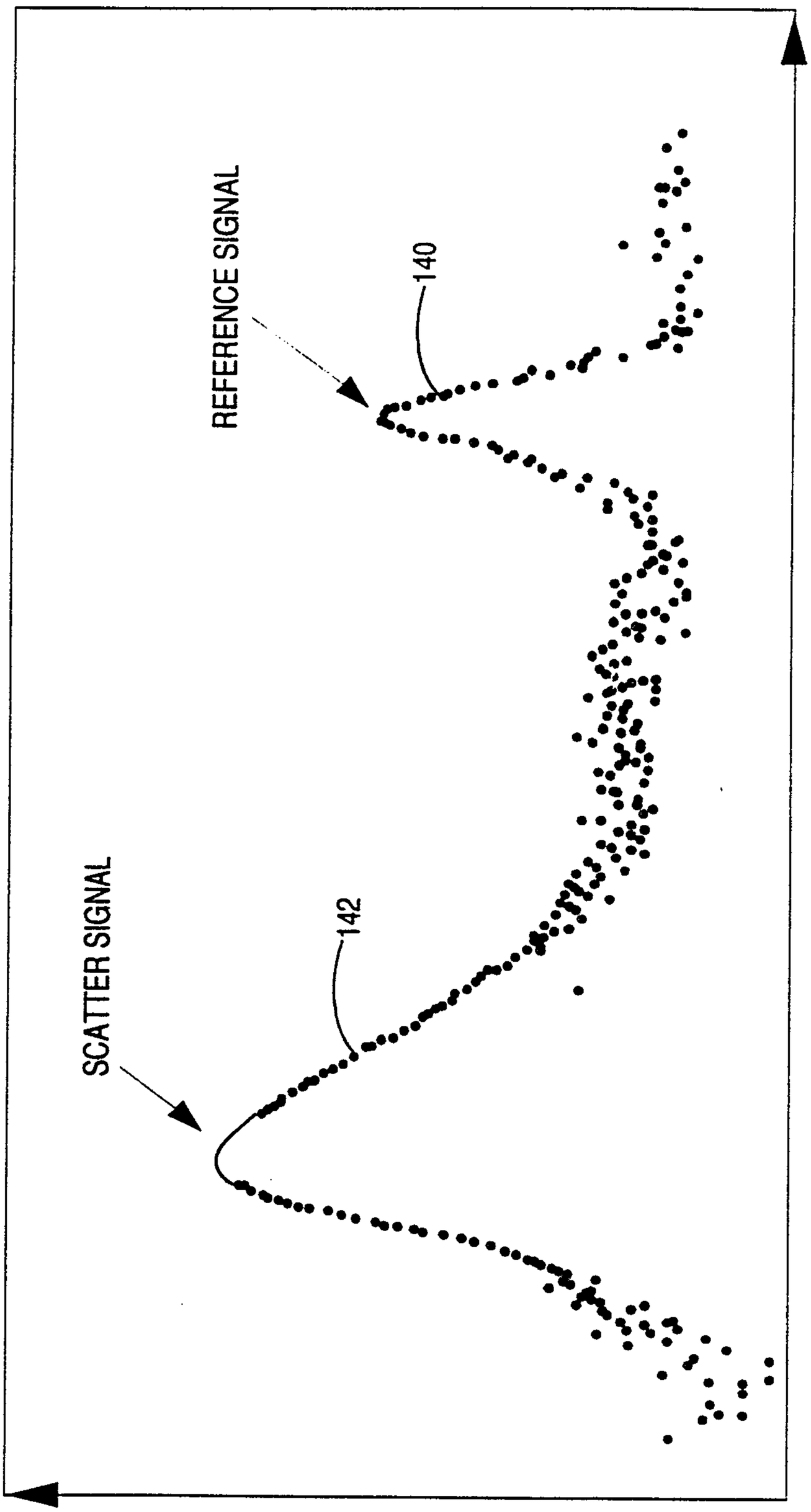

FIG. 6A

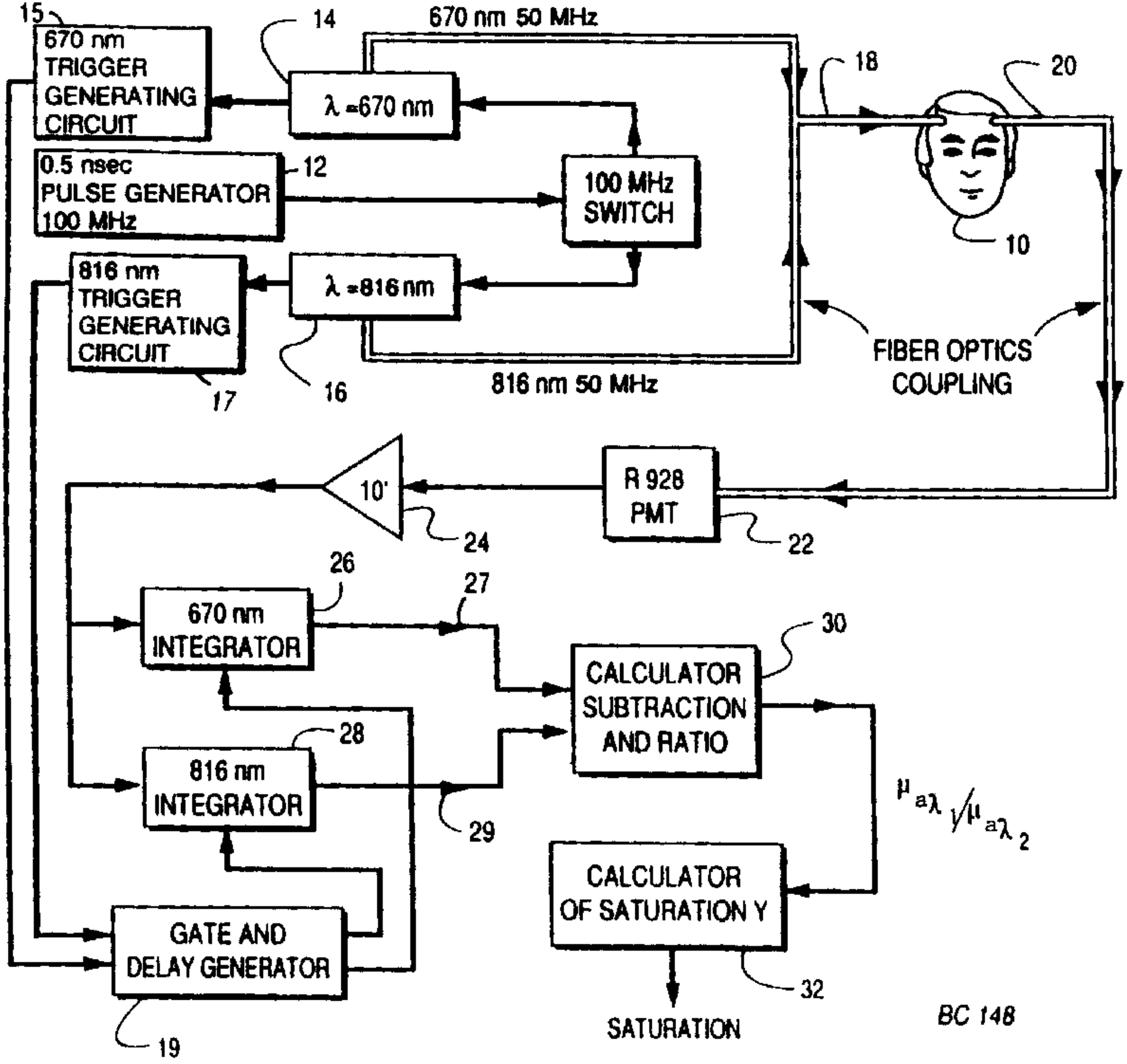
15
670 nm
TRIGGER
GENERATING
CIRCUIT
14
670 nm 50 MHz
λ =670 nm
18
20
0.5 nsec
PULSE GENERATOR
100 MHz
12
100 MHz
SWITCH
10
816 nm
TRIGGER
GENERATING
CIRCUIT
λ =816 nm
17
16
816 nm 50 MHz
FIBER OPTICS
COUPLING
10'
R 928
PMT
24
22
26
27
670 nm
INTEGRATOR
30
CALCULATOR
SUBTRACTION
AND RATIO
28
816 nm
INTEGRATOR
29
$\mu_{a\lambda_1}/\mu_{a\lambda_2}$
CALCULATOR
OF SATURATION Y
GATE AND
DELAY GENERATOR
32
SATURATION
19
BC 148