United States Patent

Stuner

[15] **3,636,568**

[45] **Jan. 25, 1972**

[54] MECHANICS MAGNETIC GLOVE

[72] Inventor: **John P. Stuner**, P.O. Box 27, Dover, Idaho 83825

[22] Filed: **Apr. 1, 1970**

[21] Appl. No.: **24,526**

[52] **U.S. Cl.** **2/161**, 294/25, 294/65.5

[51] **Int. Cl.** **A41d 19/00**, A41d 13/10

[58] **Field of Search** ..... 2/158–161, 16, 2/20; 294/25, 65.5; 223/109 A; 24/73.151

[56] **References Cited**

UNITED STATES PATENTS

1,046,985	12/1912	Creedon	2/159 X
1,174,887	3/1916	Meriwether	294/65.5 X
2,862,208	12/1958	Castro	2/161

Primary Examiner—Jordan Franklin
Assistant Examiner—Geo. V. Larkin

[57] **ABSTRACT**

A flexible glove for mechanics having a multiple number of disc-type magnets of the permanent magnetic type. This glove is of a flexible material having the permanent magnets secured on the interior of the material within the palm, and fingers which will allow the mechanic to start bolt, nuts, screws and other fasteners in areas where the fasteners may be easily dropped, the mechanic being prevented from dropping them because of the internal magnets of the glove attracting and holding the fasteners to the glove.

1 Claims, 2 Drawing Figures

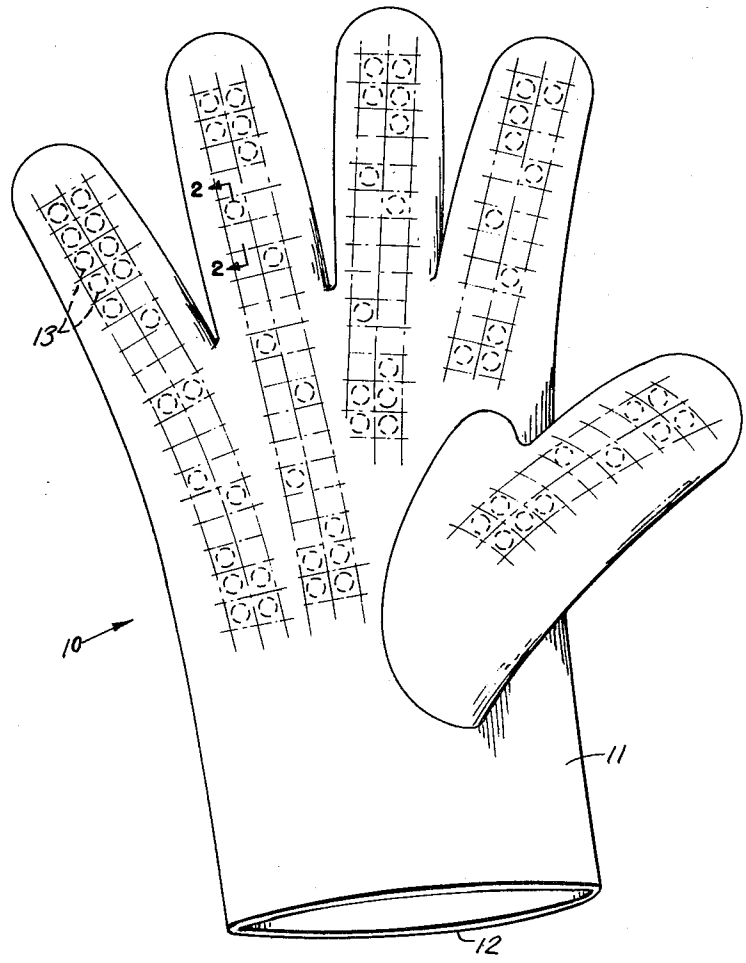

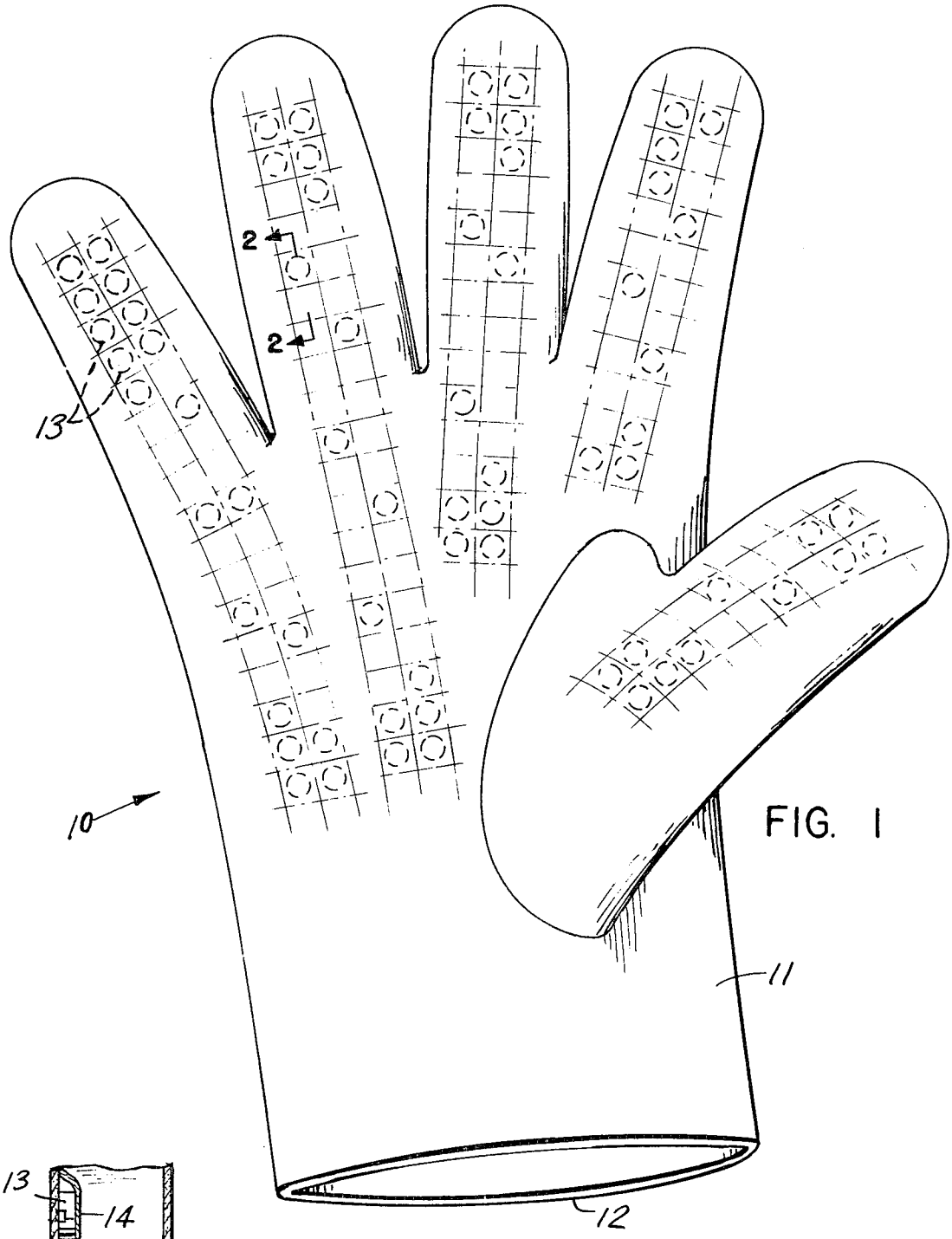

FIG. 1

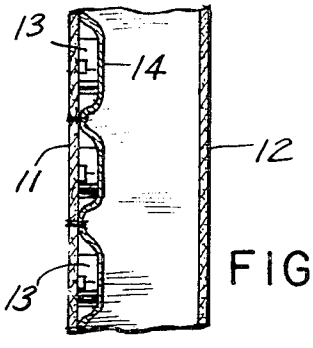

FIG. 2

INVENTOR.
JOHN P. STUNER

MECHANICS MAGNETIC GLOVE

This invention relates to magnetic devices for mechanics and the like.

It is therefore the main purpose of the present invention to provide a flexible magnetic glove which will permit nuts, bolts or tools of ferrous materials to be held securely while being started in use particularly in close quarters, and wherein accordingly they are subject to being easily dropped from a person's grip.

Another object of the present invention is to provide a magnetic glove which incorporates permanent magnet discs secured within the interior of the glove, particularly on a rear side of the palm, and the rear side of the glove fabric that forms a front side of the fingers thereof.

A further object of the present invention is to provide a glove of the type described and which is also adaptable to hold various types of wrenches without permitting them to be accidentally dropped away from the glove in case a grasp of them is temporarily or accidentally released.

Other objects of the present invention are to provide a mechanic's magnetized glove which is simple in design, inexpensive to manufacture, rugged in construction and easy to use and effective in operation.

These and other objects will become readily evident upon study of the following specification together with the accompanying drawing wherein:

FIG. 1 is a plan view of the present invention showing the palm portion facing up; and

FIG. 2 is a cross-sectional view taken along the line 2—2 of FIG. 1.

According to this invention, the glove **10** including an inner side **11** and an outer side **12**, has along the fingers and palm on the interior, a plurality of spaced-apart permanent magnets **13** secured on the interior so that the magnetic flux field will extend its influence towards the palm and inside surface of the fingers.

As shown in FIG. 2 of the drawing, the plurality of permanent magnet discs **13** are retained by another layer of material **14** stitched to the inner side **11**.

It shall be noted that any method of securing the magnets **13** may be used, such as cementing or moulding to the interior of the glove **10**.

As shown in FIG. 2 of the drawing, it is to be noted that each of the magnets may be individually enclosed within its own compartment which are formed by stitches which enjoin the outer and inner fabrics between the magnets, as shown.

It shall further be noted that the magnets **13** preferably should be secured in a relationship that is such that the neighboring magnet **13** poles are of the same polarity so that the magnetic flux field is not lost between the adjacent magnets **13**.

In use, the glove **10** is placed upon the hand of the mechanic so that when grasping nuts, bolts or wrenches that the magnets **13** will attract and hold the above-mentioned fasteners or wrenches in order that the mechanic may effectively use them when working in close quarters without fumbling and dropping the aforesaid devices.

What I now claim is:

1. A mechanic's magnetic glove, comprising in combination, a hand receiving part, a wrist part, four finger stalls, a thumb stall, a liner element extending over the inner surface of the palm side of the hand receiving part and the palm sides of said finger and thumb stalls, stitching securing said liner element to said hand receiving part, said stitching including a series of rectilinear stitches which form a series of pockets, a plurality of small permanent magnetic discs being located between said liner element and said glove and being held in said pockets.

* * * * *