E. WASHINGTON.

VACUUM CABINET.

APPLICATION FILED APR. 29, 1919.

1,347,194. **Patented July 20, 1920.**

3 SHEETS—SHEET 1.

Fig. 1.

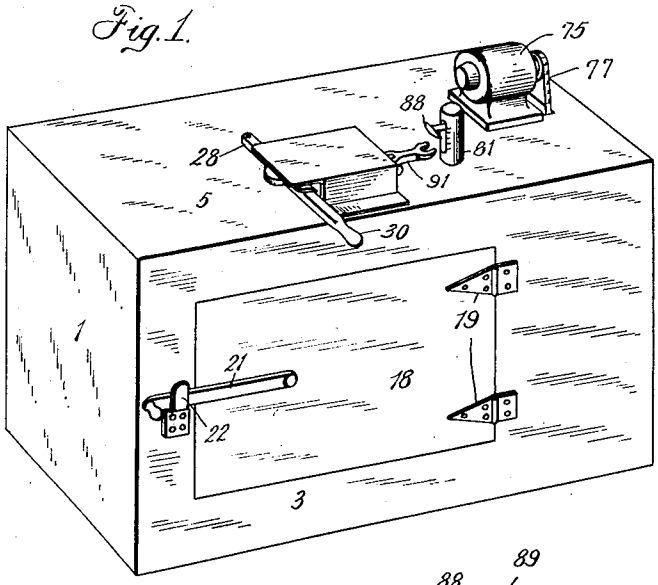

Fig. 2.

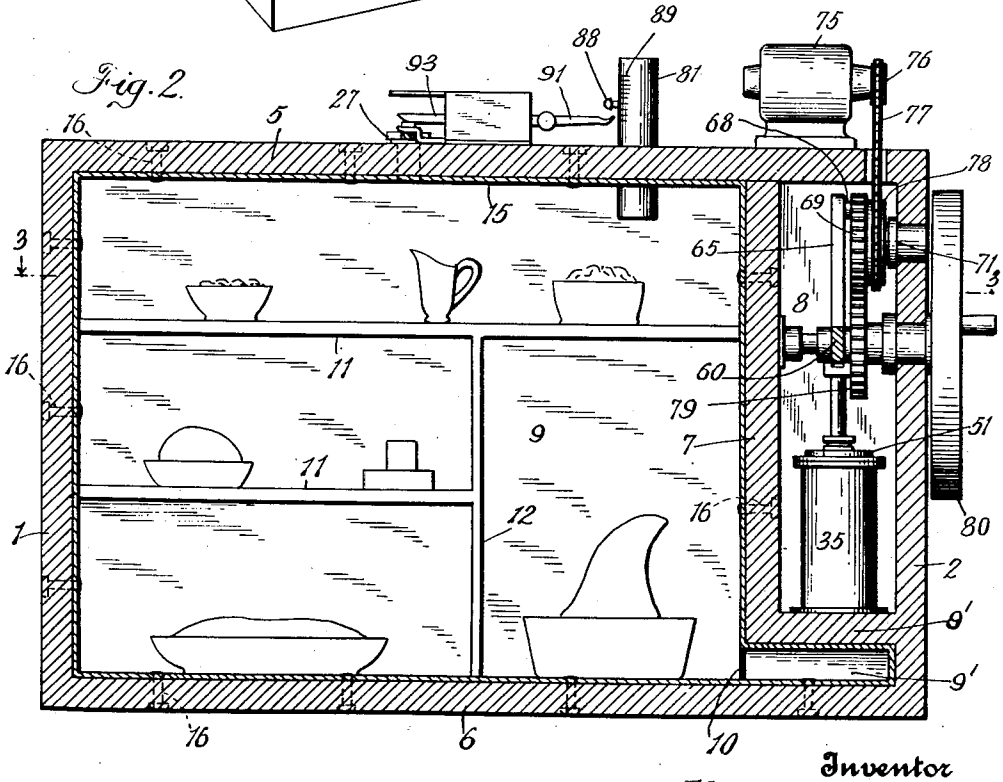

Inventor

Elwood Washington

By his Attorney

William E. Richards

E. WASHINGTON.

VACUUM CABINET.

APPLICATION FILED APR. 29, 1919.

1,347,194. **Patented July 20, 1920.**

3 SHEETS—SHEET 2.

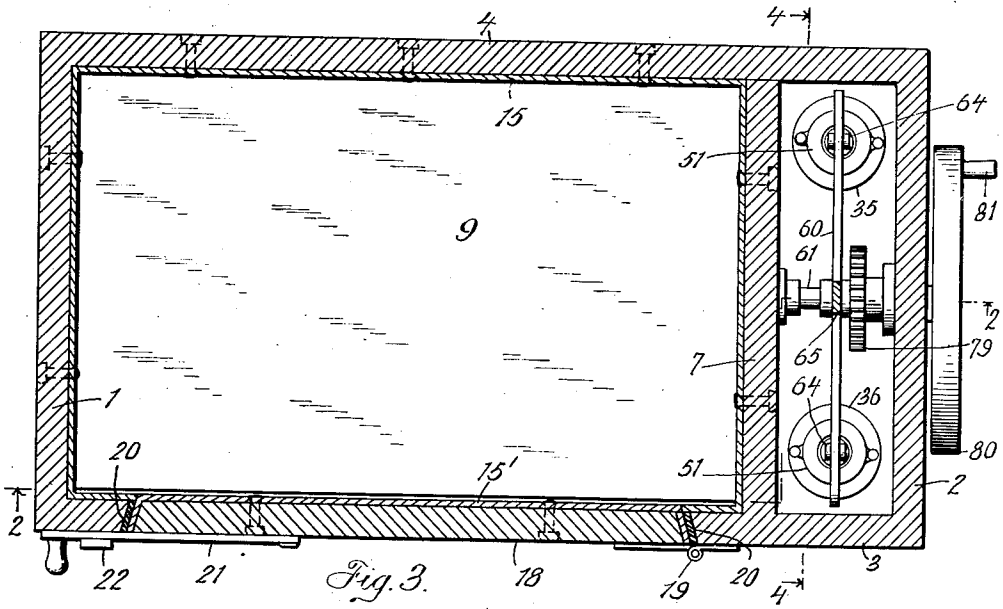

Fig. 3.

Fig. 4.

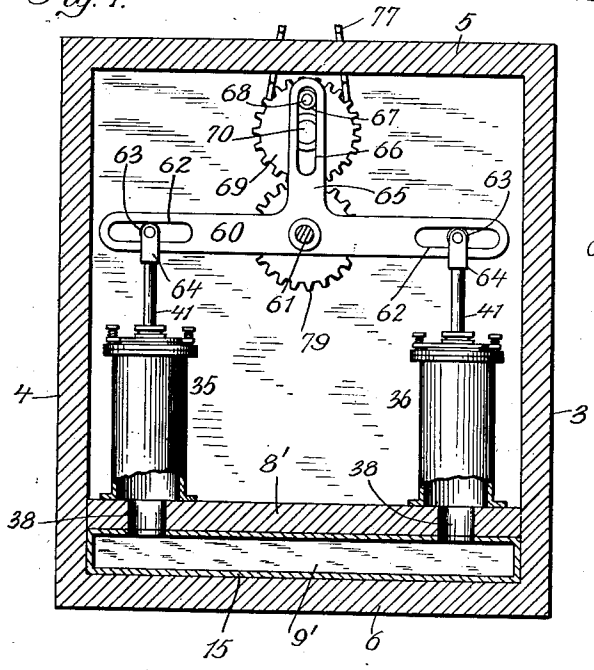

Fig. 5.

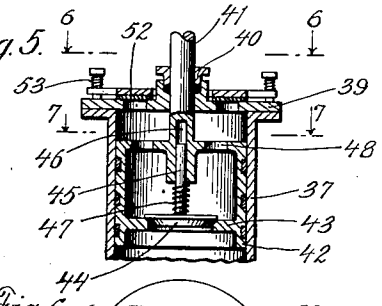

Fig. 6.

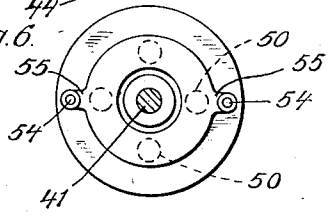

Fig. 7.

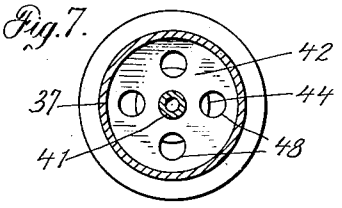

Inventor

Elwood Washington

By his Attorney

William Richards

E. WASHINGTON.

VACUUM CABINET.

APPLICATION FILED APR. 29, 1919.

1,347,194. **Patented July 20, 1920.**

3 SHEETS—SHEET 3.

Fig. 8.

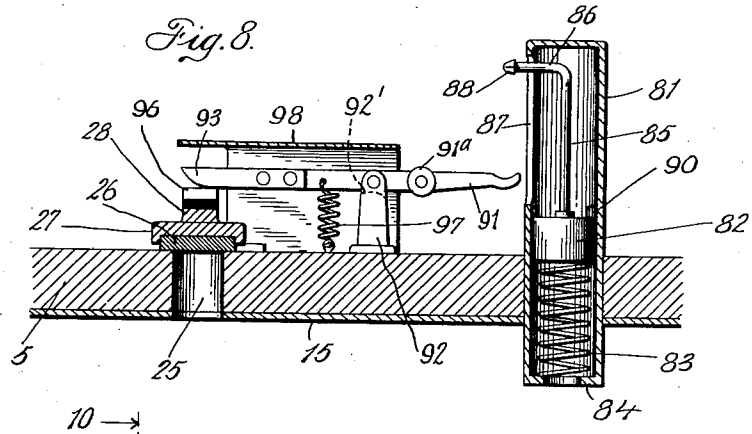

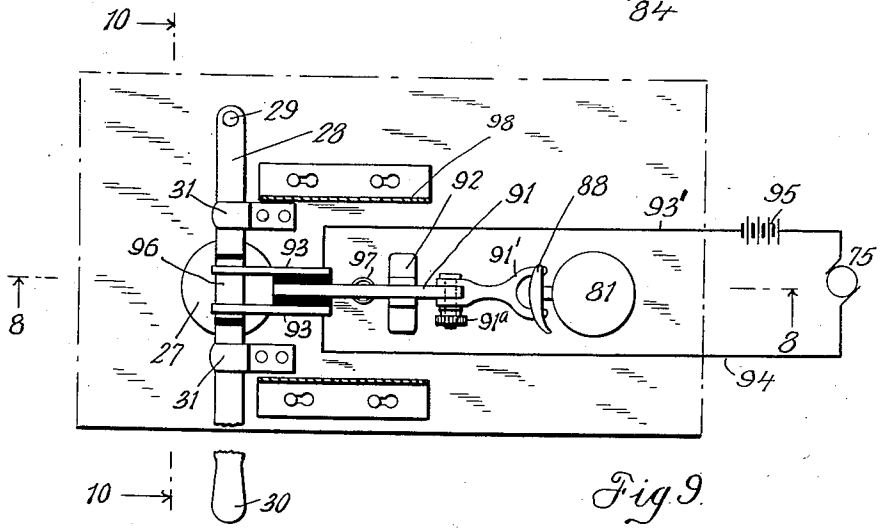

Fig. 9.

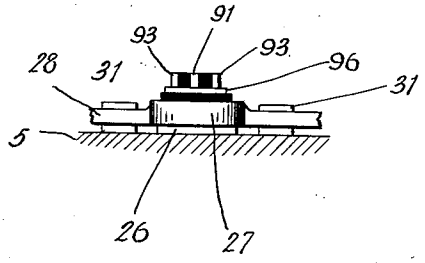

Fig. 10.

Inventor

Elwood Washington

By his Attorney

William E. Richards

UNITED STATES PATENT OFFICE.

ELWOOD WASHINGTON, OF HAMMOND, INDIANA.

VACUUM-CABINET.

1,347,194. Specification of Letters Patent. Patented July 20, 1920.

Application filed April 29, 1919. Serial No. 293,506.

To all whom it may concern:

Be it known that I, ELWOOD WASHINGTON, a citizen of the United States, residing at Hammond, county of Lake, and State of Indiana, have invented certain new and useful Improvements in Vacuum-Cabinets, of which the following is a specification.

This invention relates to a vacuum cabinet or receptacles generally, for perishable goods such as foodstuffs, and it has for an object to provide a novel, simple, and efficient construction by which a condition of vacuum may be maintained in the interior of such cabinet or receptacle.

A further object is to provide a means which will act automatically to maintain the vacuum in the cabinet or receptacle.

For further comprehension of the invention, and of the objects and advantages thereof, reference will be had to the following description and accompanying drawing, and to the appended claims in which the various novel features of the invention are more particularly set forth.

In the accompanying drawings I have illustrated my invention embodied in a portable cabinet such as would be supplied to dwellings or small stores, the invention being equally applicable to freight cars, ships, or storage warehouses for perishable goods.

Figure 1 of the drawings is a perspective view of a vacuum cabinet embodying the invention.

Fig. 2 is a longitudinal vertical sectional view thereof, this view being taken on the line 2—2 of Fig. 3.

Fig. 3 is a horizontal section on the line 3—3 of Fig. 2.

Fig. 4 is a transverse section on the line 4—4 of Fig. 2.

Fig. 5 is an enlarged fragmentary axial section of one of the pumps.

Fig. 6 is a horizontal section on the line 6—6 of Fig. 5.

Fig. 7 is a horizontal section on the line 7—7 of Fig. 5.

Fig. 8 is an enlarged fragmentary vertical section showing the indicator and automatic pump control means, this view being taken on the line 8—8 of Fig. 9.

Fig. 9 is a plan view of the parts shown in Fig. 8.

Fig. 10 is a fragmentary transverse section on the line 10—10 of Fig. 9.

The cabinet here shown is of rectangular shape having end walls 1 and 2, a front wall 3, a rear wall 4, top 5 and bottom 6, all united into a rigid structure. Near one end of the cabinet a partition 7 extends transversely forming a small chamber 8 in which is located the vacuum pump mechanism, a horizontal partition 8′ extending a short distance above the bottom 6 between the partition 7 and adjacent end wall 2 and forming the bottom of the mechanism chamber 8.

The remainder of the interior forms the vacuum chamber which is indicated generally at 9 and extends as at 9′ under the partition, a screen 10 being extended downwardly from the partition to prevent objects from passing into the space 9′, with which the vacuum pumps communicate. The vacuum chamber may be provided with shelves 11 to receive the goods or subdivided as by the partition 12, or arranged in any suitable or convenient manner.

The main body of the wall members and partitions may be of wood and the parts thereof forming the walls of the vacuum chamber are lined with a sheet metal lining 15 which may be secured at suitable intervals to the wooden wall members as by the bolts 16 shown in Figs. 2 and 3 having their heads sunk into the wall members and their inner ends niched on the lining to make an air tight joint between the lining and bolts, the walls and lining being of substantial strength to withstand the atmospheric pressure.

The front wall 3 is provided with an outwardly opening door 18 mounted on hinges 19, this door, and the door opening preferably having beveled edges which may be faced with suitable packing strips 20 thereby insuring an air tight joint, a metallic sheet lining 15′ being secured to the inner face of the door. The door is held closed by a swinging latch 21 carried by the door and engaging in a keeper 22 carried by the front wall 3, the parts being arranged to cause a considerable closing pressure to be exerted when the latch is engaged in the keeper.

Leading through the top 5 (Fig. 8) and into the vacuum chamber is an opening 25, closed by a swinging stopper 26 which may comprise a rubber disk fixed in a cap 27 formed on an arm 28 pivoted as at 29 to the top 5, and projecting forwardly beyond the front wall and provided with a handle

30. A pair of clips 31 are fixed to the top on either side of the opening 25 and engage over the arm 28 and firmly press the stopper 26 down when the arm is swung to position with the stopper closing the opening. This opening is provided to relieve the vacuum when the door is to be opened.

To produce the vacuum in the chamber I have here provided a pair of suction pumps 35 and 36 which are located in the small chamber 8 and mounted on the partition 8'. As here shown each of these pumps comprises a cylinder 37 having an open lower end suitably secured to the partition 9, passages 38 leading through the latter to the interior of each pump.

The upper ends of each cylinder may be closed by a head 39 provided with a stuffing box 40 through which passes a piston rod 41 having a hollow piston 42 on its lower end. The piston is in the form of an inverted cup having an interior annular flange 43 near its lower end which forms a seat for a valve 44 whose stem 45 may be guided in a boring 46 in the piston and rod, a spring 47 normally pressing the valve downward on its seat. Openings 48 lead through the top of the piston.

A one-way valve device is formed in the head 39 of each cylinder and as here shown the head is formed with a series of apertures 50 closed by a valve ring 51 which may have a facing 52 of rubber or the like thereon. The valve ring may be pressed downwardly by a pair of springs 53 bearing between the heads of bolts 54, secured to the cylinder head, and perforated ears 55 formed on the ring 51 and through which the bolts pass.

To operate the pistons I provide a pair of swinging arms each connected to one piston rod and operated by a common mechanism. I have here shown these arms as formed by the opposite ends of the lever 60 pivoted centrally on a shaft 61 journaled at opposite ends in the partition 7 and end wall 2. The ends of this lever are longitudinally slotted as at 62 to receive rollers 63 carried in bifurcated brackets 64 fixed to the tops of the piston rods 41.

The lever is provided with an upwardly extending arm 65 midway between its ends, this arm being vertically slotted as at 66 to receive a roller 67 on a stud 68 projecting from a gear 69 mounted on a stub shaft 70 on a bracket 71 fixed to the wall 2 near the top thereof, this gear being adapted to be rotated by suitable means.

In the present instance I have provided both a manually operated driving means, and an automatically operated power drive. As here shown an electric motor 75 is mounted on the top 5 of the cabinet and is provided with a sprocket wheel 78 rigid with the gear 69. To provide the manual drive the gear 69 may mesh with a gear 79 on the shaft 61, the end of this shaft projecting through the wall 2 and having a flywheel 80 fixed thereon which is provided with a handle 81. As will be apparent the pumps may be operated either by the motor 75 or by rotating the wheel 80 by hand.

In connection with the motor I provide an automatic control which works in conjunction with a gage for indicating the degree of vacuum in the vacuum chamber. This gage comprises a tube 81 inserted in the top 5 of the vacuum chamber and having a plunger 82 slidable therein and pressed upwardly by a coiled spring 83 which seats against a flange 84 on the tube. A rod 88 is fixed at its lower end to this plunger and projects upwardly in the tube 81, its upper end being bent horizontally as at 86 to project through a vertical slot 87 in the tube and having a pointer 88 fixed thereon, the outside of the tube having a series of indicating lines 89 with which said pointer registers. The atmospheric pressure acting on the plunger 82 against the spring 83 will cause the plunger to be pressed downwardly a distance varying according to the degree of vacuum. The upward movement of the plunger when the vacuum is relieved may be limited by a stop 90 on the inside of the tube.

The automatic control device here comprises a lever 91 pivoted between its ends to a bracket 92 on the top 5, one end being in the form of a fork 91' located under the pointer 88, and its opposite end carrying a pair of insulated contact fingers 93 which are connected as indicated in diagram in Fig. 9, by wires 93' and 94, through any suitable source of power as the battery 95 to the motor 75.

Fixed to the arm 28 is an insulated bridge-piece 96 over which the contact fingers project when the arm is in position to close the opening 25, a light spring 97 normally tending to hold the contact fingers on the bridge-piece 96. The lever arm 91 may be jointed as at 91[a] to permit the adjustment of the end 91', as desired. Excessive downward movement of the contact fingers 93 when the arm 28 is moved outward may be prevented by a shoulder 92' formed on the bracket 92. This control mechanism may have a removable cover 98 placed thereover.

In the operation of the device the door 18 and stopper 26 will be closed causing the contacts 93 to rest on the bridge-piece 96 and close the circuit through the motor 75 causing the pumps to be operated.

As the piston 42 of each pump descends, the valve 44 is lifted from its seat and air from the vacuum chamber enters the cylinder, the valve ring 51 remaining closed. As the piston ascends, the valve 44 closes, and the air is forced out of the cylinder through

the openings 50, the ring 51 lifting. As the air is exhausted the pointer descends until it reaches the arm 91 and lifts the contacts 93 thus breaking the circuit to the motor. If the vacuum gradually lessens the pointer 88 will raise and start the motor again.

With my improved cabinet food or the like will remain cold or hot or otherwise in the condition of placing in the cabinet, decay or other action due to microscopic organisms being arrested.

Having thus described my invention, and set forth the manner of its use, what I claim as new, and desire to secure by Letters Patent, is:—

1. A device of the class described comprising a cabinet providing an air tight receptacle and partitioned off at one end to form a mechanism chamber, said mechanism chamber being spaced from the bottom of the cabinet to provide a space communicating with the said air tight receptacle, and suction pumps in said mechanism chamber and communicating through the bottom of the latter with the said space.

2. A device of the class described comprising a cabinet providing an air tight receptacle and partitioned off at one end to form a mechanism chamber, said mechanism chamber being spaced from the bottom of the cabinet to provide a space communicating with the said air tight receptacle, and suction pumps in said mechanism chamber and communicating through the bottom of the latter with the said space, and an electric motor mounted on top of the cabinet and operatively connected to the said pumps.

3. A device of the class described comprising an air-tight receptacle having an opening in its wall, a suction pump in communication with said receptacle, a removable stopper closing said opening, an electric motor for driving said pump, means whereby a closed power circuit is provided through the motor when the said stopper is in position, said circuit including an element on the stopper, and means whereby the said circuit is controlled by the degree of vacuum in the receptacle.

4. A device of the class described comprising an air-tight receptacle, having an opening in its wall, a suction pump in communication with said opening, a removable stopper carried by said opening, an electric motor for driving said pump, means whereby a closed power circuit is provided through the motor when the said stopper is in position, said means including a lever arm fulcrumed on the receptacle and an element carried by the said stopper adapted to be engaged by said lever arm, and a device movable under variations of vacuum in the receptacle and adapted to engage said lever arm and move it from engagement with the said stopper element.

5. A device of the class described comprising an air-tight receptacle, having an opening in its wall, a suction pump in communication with said receptacle, a removable stopper closing said opening, an electric motor for driving said pump, a device automatically movable according to the degree of vacuum in the receptacle, a bridging piece carried by the said stopper, means providing a closed power circuit through the motor and bridging piece, and a member adapted to be engaged by the said device to open the said circuit.

6. A device of the class described comprising an air-tight receptacle, having an opening in its wall, a suction pump in communication with said receptacle, a removable stopper closing said opening, an electric motor for driving said pump, a device automatically movable according to the degree of vacuum in the receptacle, a bridging piece carried by the said stopper, means providing a closed power circuit through the motor and bridging piece, and a member adapted to be engaged by the said device to open the said circuit, said member comprising a lever pivoted between its ends.

In testimony whereof I have affixed my signature.

ELWOOD WASHINGTON.