US00D758945S

(12) United States Design Patent

Zhao

(10) Patent No.: US D758,945 S

(45) Date of Patent: ** Jun. 14, 2016

(54) **AUTOMOBILE WHEEL**

(71) Applicant: **John Zhao**, Monterey Park, CA (US)

(72) Inventor: **John Zhao**, Monterey Park, CA (US)

(73) Assignee: **Wah Hung Group Inc.**, Monterey Park, CA (US)

(**) Term: **14 Years**

(21) Appl. No.: **29/503,757**

(22) Filed: **Sep. 29, 2014**

(51) **LOC (10) Cl.** **12-16**

(52) **U.S. Cl.**
USPC **D12/211**

(58) **Field of Classification Search**
USPC D12/204–213; 301/37.101, 64.101, 65
See application file for complete search history.

(56) **References Cited**

U.S. PATENT DOCUMENTS

D218,231	S	*	8/1970	Shimano et al.	D12/207
D466,068	S	*	11/2002	Maifrini	D12/211
D466,466	S	*	12/2002	Laengerer	D12/211
6,726,292	B1	*	4/2004	Schroeder et al.	301/64.704
D508,006	S	*	8/2005	Laengerer	D12/209
D524,214	S	*	7/2006	Pfeiffer et al.	D12/211
D524,712	S	*	7/2006	Pfeiffer	D12/211
D652,364	S	*	1/2012	Zhao	D12/211
D736,134	S	*	8/2015	Platto et al.	D12/211
2011/0062770	A1	*	3/2011	Krajewski et al.	301/65
2011/0148181	A1	*	6/2011	Silva de Carvalho et al.	301/37.102
2014/0265535	A1	*	9/2014	Stratton et al.	301/37.102
2015/0102656	A1	*	4/2015	Goto et al.	301/64.101

* cited by examiner

Primary Examiner — Ian Simmons
Assistant Examiner — Samantha Q Lawrence
(74) *Attorney, Agent, or Firm* — Adli Law Group P.C.

(57) **CLAIM**

I claim the ornamental design for an automobile wheel, as shown and described.

DESCRIPTION

FIG. **1** is a perspective view of an automobile wheel according to the claimed design; and,

FIG. **2** is a front elevational view of the automobile wheel according to the claimed design.

The ornamental design which is claimed is shown in solid lines in the drawings. The broken lines shown in FIG. **1** illustrate portions of the automobile wheel that form no part of the claimed design.

1 Claim, 2 Drawing Sheets

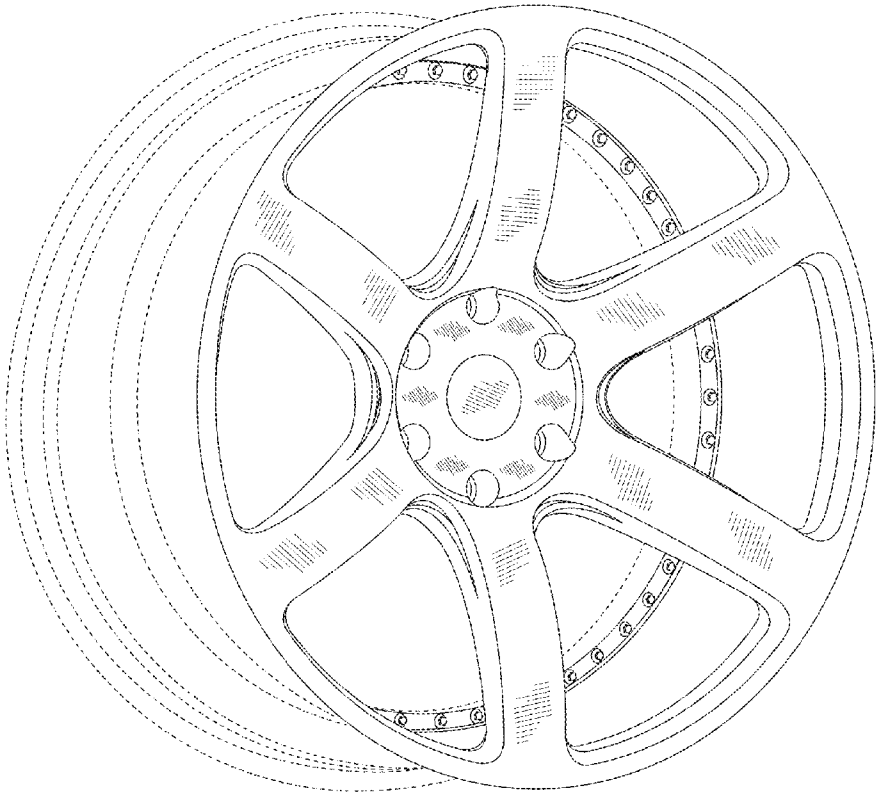

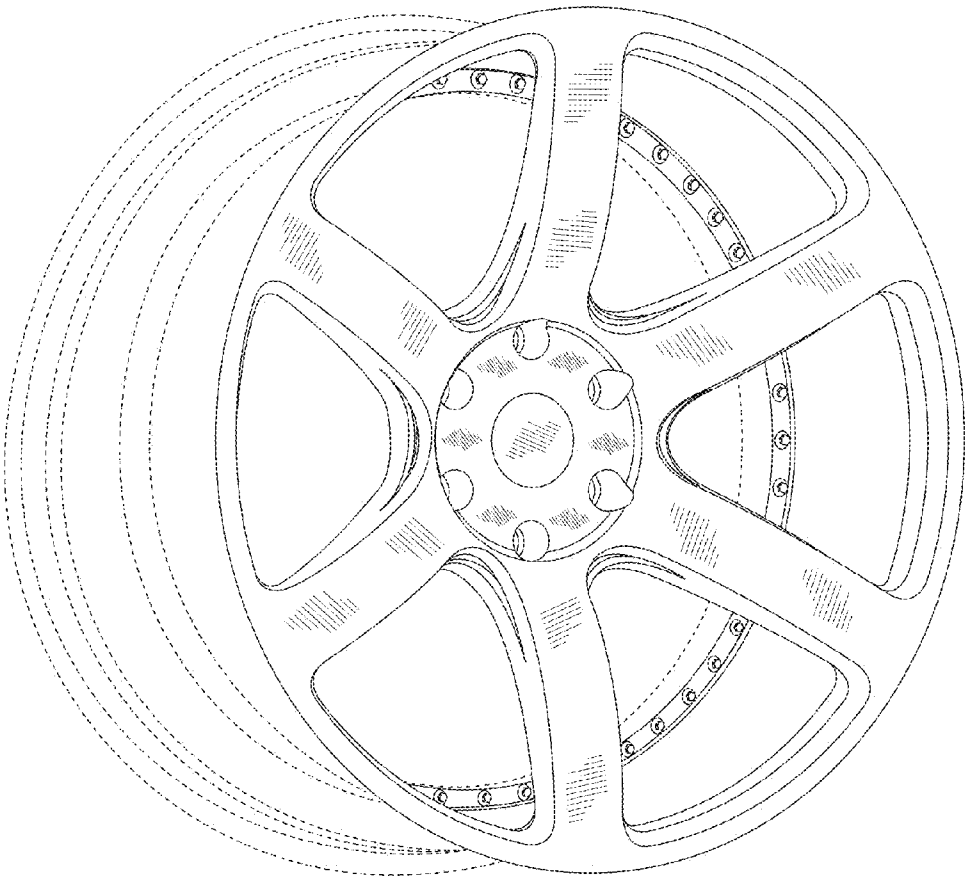

FIG. 1

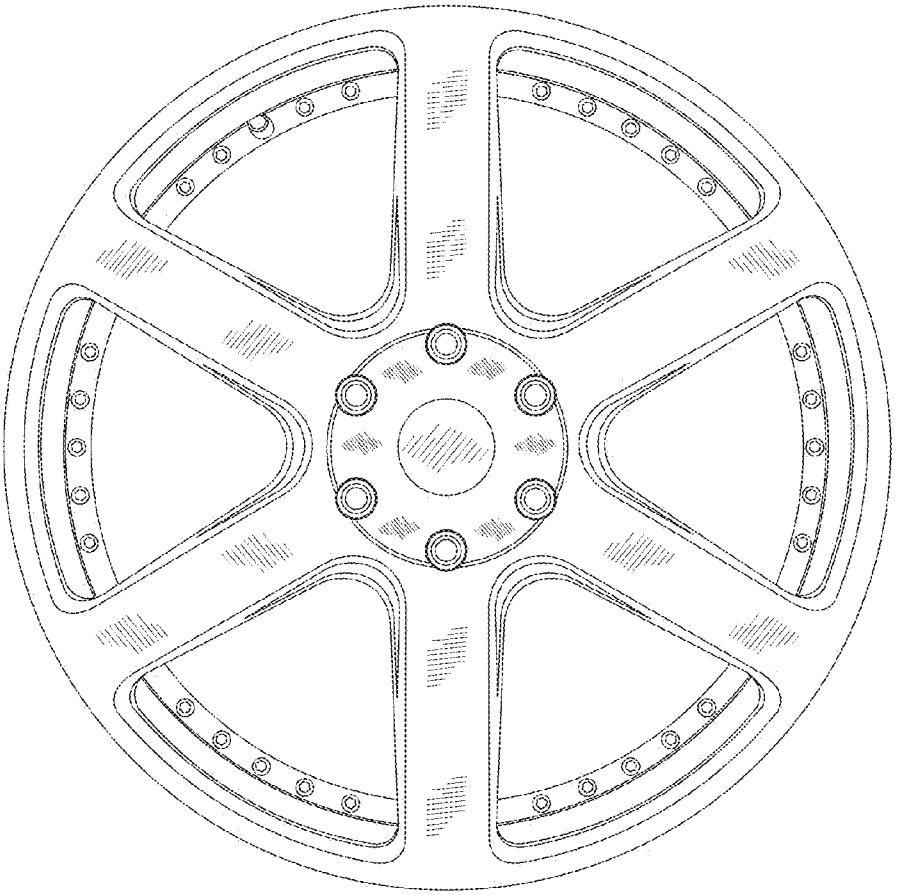

FIG. 2