Patented Mar. 14, 1944 2,344,043

UNITED STATES PATENT OFFICE

2,344,043

METHOD AND DEVICE FOR DEPICTING OBJECTS BY MEANS OF NEUTRONS OR X-RAYS

Hartmut Israel Kallmann, Berlin-Charlottenburg, and Ernst Kuhn, Berlin, Germany; vested in the Alien Property Custodian

Application July 3, 1941, Serial No. 401,039
In Germany March 4, 1940

8 Claims. (Cl. 250—65)

It has been proposed to depict objects by means of neutrons in a manner similar to that employed for X-rays. The difficulty consists, however, in that the sources of neutrons which are available possess only a low intensity so that even with the best neutron-photographing systems heretofore known, it is necessary to expose for a comparatively long time. Increasing the intensity of the source of neutrons, which would be possible in principle, would involve a very considerable technical expense and require very much space. It has been proposed to use, for the production of photographic pictures of objects by means of neutrons, a neutron-image-converter in which, in a neutron-reactive layer, by the action of the neutrons depicting the objects, charged particles or gamma rays are released. Said charged particles or gamma rays produce secondary electrons directly or indirectly through the intermediary of a luminescent mass, said secondary electrons being accelerated and collected with the aid of suitable electron-optical means upon a photographic layer where they produce an image of the depicted object. It has also been proposed to collect, for increasing the sensitiveness of this image-converter, these electrons not directly upon a photographic layer but upon a luminescent screen, the radiation of said screen emitted under the influence of the impinging electrons acting upon the photographic layer. However, even if these special auxiliary means are employed, a comparatively intensive source of neutrons is still required if the picture is to be produced within a few minutes with sufficient sharpness.

It is an object of the present invention to overcome this drawback. This and other inventive purposes are attained by virtue of the fact that in the neutron-image-converter the released secondary electrons, preferably after their acceleration, are collected by electron-optical means to form an image of the object to be depicted, reduced in size, on a luminescent screen and/or on a photographic layer and that this image, reduced in size, is enlarged to a real or virtual image after the latent photographic image has been developed. It is then advisable to adjust the image-converter, so that the originally slow secondary electrons are preferably employed for the copying. In the electron-optical reducing neither a loss in intensity nor a loss in sharpness of the picture occurs. In this reducing practically all secondary electrons are employed which are emitted to one side whereas in a light-optical reduction only that portion of the light radiation is utilized, which enters into the lens aperture. In the electron-optical reduction the brightness per unit area is therefore practically inversely proportional to the size of the image. The strongly reduced image produced in this manner is preferably light-optically enlarged. If a latent photographic image, reduced in size, has been produced with the image-converter, the enlargement will be carried out after the development of the latent photographic image, for instance to the size of the latent image originally produced by the neutrons. The enlarged image possesses the same sharpness as the image which has been produced on a luminescent screen and/or on a photographic layer according to the methods formerly proposed. The exposing time necessary in the method according to the invention for the production of a photographic image is, however, for instance with a linear reduction in the proportion of 1:10, only $1/100$ as long as in the formerly proposed methods. Without reducing the time of exposing, it is therefore possible to use, in the application of the method according to the invention, a source of neutrons the intensity of which amounts to only $1/100$ of the intensity of the source of neutrons necessary in the former methods.

This advantage of the method according to the invention is due amongst other reasons to the fact that the reduced photographic image is subsequently enlarged by an additional source of energy, such as for instance the source of the light-optical enlarging arrangement which is absolutely independent of the source of neutrons. If the sharpness of the original image produced by the neutrons has to be preserved, the measure of the reduction and the gain in intensity is practically limited by the power and the structure of the photographic system.

This method may also be employed for improving the visual observation of a luminescent screen image produced by means of the neutron-image-converter. The latent image primarily produced by the neutrons on the neutron-reactive layer is reduced and copied in the neutron-image-converter on a luminescent screen, and this reduced luminescent screen image is viewed through a magnifying glass. By viewing the luminescent screen image through a magnifying glass much more light will get into the eye from the viewed portion of the luminescent screen image than without magnifying glass, owing to

March 14, 1944. H. I. KALLMANN ET AL 2,344,043

METHOD AND DEVICE FOR DEPICTING OBJECTS BY MEANS OF NEUTRONS OR X-RAYS

Filed July 3, 1941

Fig. 1

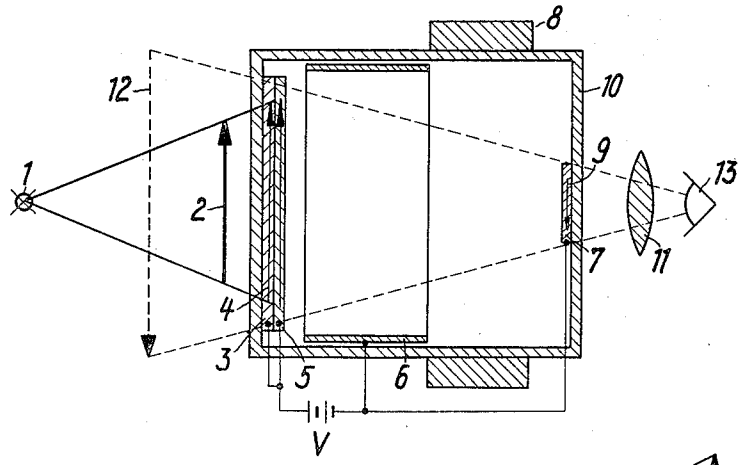

Fig. 2

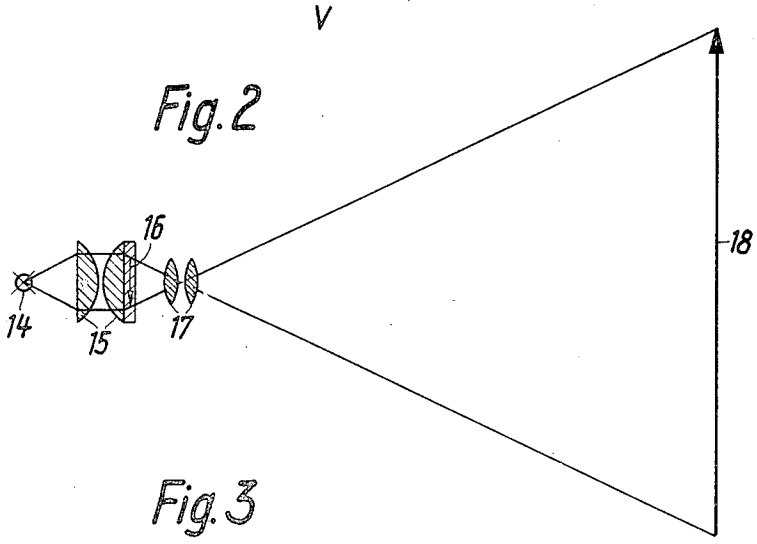

Fig. 3

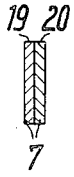

Inventors
Hartmut Israel Kallmann
and
Ernst Kuhn
Pierce & Scheffler
attorneys