US 20140083118A1

(19) **United States**

(12) **Patent Application Publication**

Lemke

(10) **Pub. No.: US 2014/0083118 A1**

(43) **Pub. Date: Mar. 27, 2014**

(54) **DEVICE FOR COOLING A POURABLE OR LIQUID PRODUCT**

(75) Inventor: **Klaus Lemke**, Hermsdorf (DE)

(73) Assignee: **TRIDELTA GmbH**, Hermsdorf (DE)

(21) Appl. No.: **13/995,837**

(22) PCT Filed: **Nov. 24, 2011**

(86) PCT No.: **PCT/EP2011/070968**

§ 371 (c)(1),
(2), (4) Date: **Dec. 13, 2013**

(30) **Foreign Application Priority Data**

Dec. 22, 2010 (DE) 102010055706

Publication Classification

(51) **Int. Cl.**
F25D 31/00 (2006.01)

(52) **U.S. Cl.**
CPC ***F25D 31/002*** (2013.01)
USPC **62/62**; 62/452

(57) **ABSTRACT**

The invention relates to a device for cooling a pourable or flowable product, with a vessel **1** for receiving and conveying the pourable or flowable product and a plurality of cooling zones **13***a*, **13***b*, **13***c*, which are formed along the vessel **1** in the conveying direction of the pourable or flowable product. According to the invention, the cooling zones **13***a*, **13***b*, **13***c* are designed such that they can be supplied with a respective cooling medium **15***a*, **15***b*, **15***c* independently of one another. The device also comprises a control means for controlling the cooling power of the individual cooling zones **13***a*, **13***b*, **13***c* independently of one another.

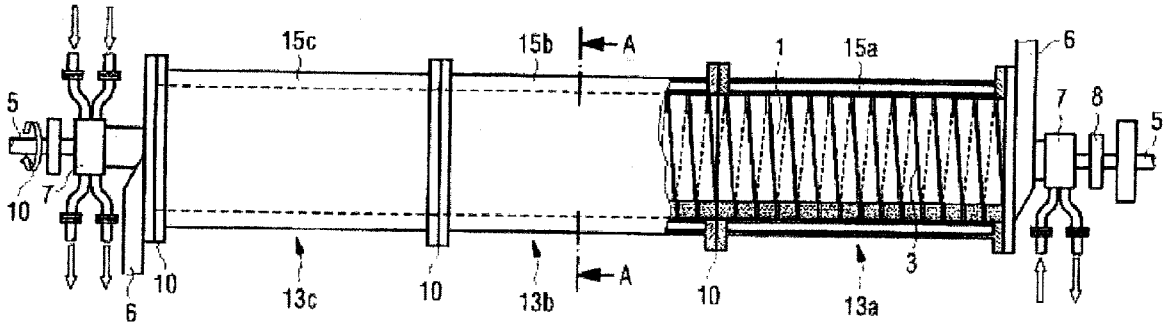

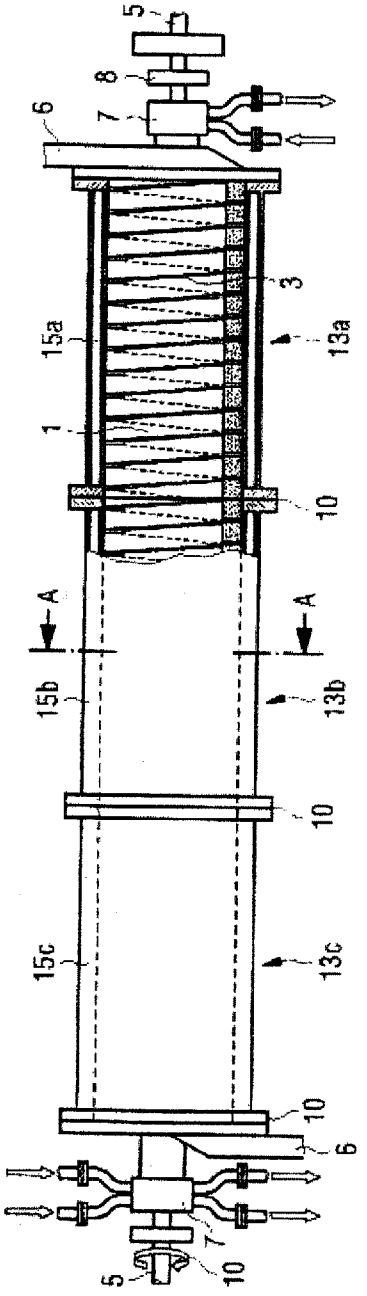

FIG 1

FIG 2

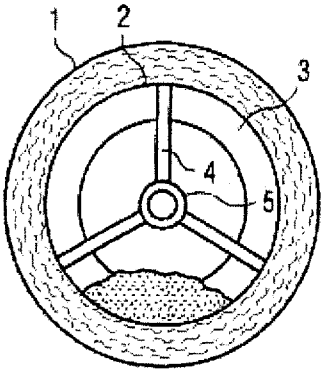

FIG 3

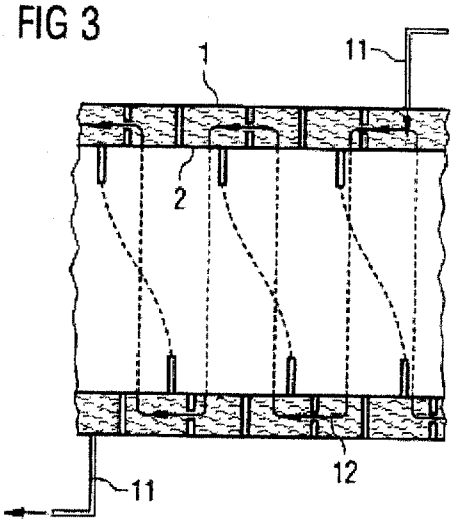

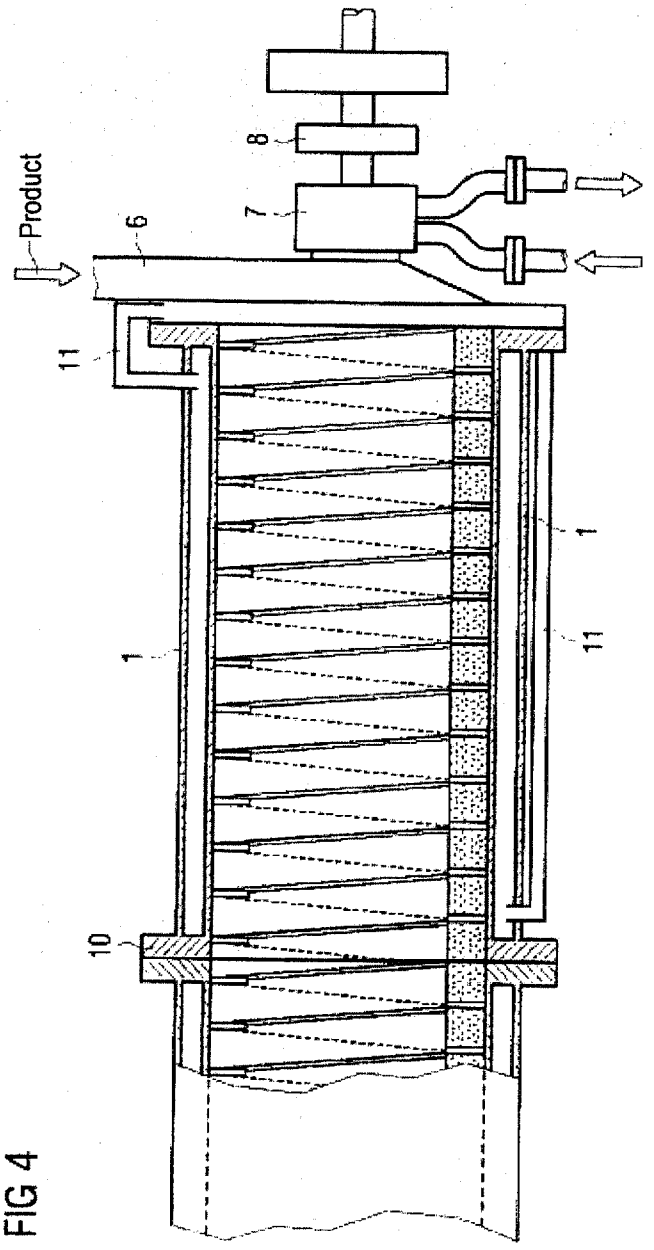

FIG 4

FIG 5

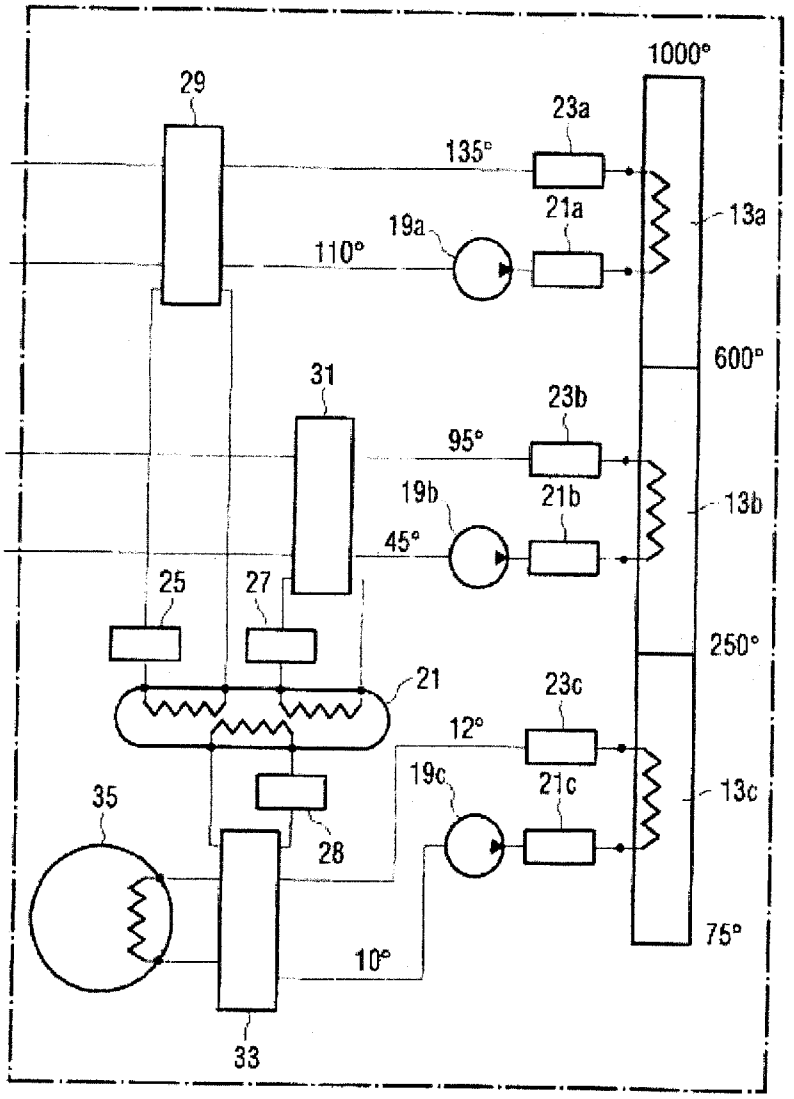
1000°
29
23a
135°
21a
19a
110°
13a
600°
31
23b
95°
19b
21b
45°
13b
25
27
250°
21
23c
12°
19c
21c
13c
35
28
75°
10°
33

DEVICE FOR COOLING A POURABLE OR LIQUID PRODUCT

[0001] The invention relates to a device for cooling a pourable or flowable product, for example strontium hexaferrite in the form of granules or the like in the production of hard ferrites.

[0002] In many technical processes there is often the task of transporting a pourable or flowable product on further after it has passed through a furnace, and thereby cooling it. It is customary to use water-cooled rotary tubes or screws for this.

[0003] When it is transported further, the pourable or flowable product, which leaves the furnace at a temperature of for example over 1000° C., is cooled by means of this water-cooled rotary tube as it is transported. An example of such rotary-tube or tubular-screw cooling is disclosed in German utility model DE 20106822 U1.

[0004] However, it is desirable to recover to a certain extent the heat that is given off to the cooling medium during the cooling. In this connection, the patent application DD 281451 A5 proposes providing along a rotating drum a number of rotating heat exchangers, which have a common supply line and the discharge lines of which are connected via changeover valves either to a common bypass line or to a stationary heat exchanger. Switching of the changeover valves takes place by means of a control unit on the basis of temperature measurements of the cooling medium, so that it is possible to provide the waste heat occurring on the rotary drum for a consumer continuously and at a temperature that is as high as possible and constant. To this extent, this document discloses the subject matter of the preamble of claim **1**.

[0005] A disadvantage of the technique shown in this document is that, since all the flows to and from the individual cooling regions are directed to one line and are connected to valves, only one type of cooling medium can be used. This type of construction also means that there is a predetermined constant flow rate. The control is provided only by changeover valves.

[0006] Reference should also be made to the document DE 3320595 A1, which discloses a screw conveyor for discharging solid residues from devices operating at high temperature and under positive pressure and is made up of two sections, which have separate cooling devices. This document is concerned with the problem that a further comminution of the product takes place in the screw conveyor and for its part leads to greater wear of part of the screw. To allow this part to be exchanged effectively, it is provided that the screw conveyor is made up of two sections.

[0007] The invention addresses the problem of providing an improved device for cooling a pourable or flowable product that makes it possible for the heat to be recovered more efficiently and greater degrees of freedom to be obtained when carrying out the cooling operation.

[0008] The problem is solved by a device according to claim **1**. The dependent claims relate to further advantageous aspects of the invention.

[0009] A preferred embodiment of the invention is described in detail below on the basis of the accompanying figures.

[0010] In the figures:

[0011] FIG. **1** shows a cross-sectional view through the cooling device according to the invention;

[0012] FIG. **2** shows a cross-sectional view along the line A-A in FIG. **1**;

[0013] FIG. **3** shows an enlarged cutout from FIG. **1** with details of the conduction of the cooling medium;

[0014] FIG. **4** shows a further enlargement of a cutout from FIG. **1** to illustrate the routing of the supply line and discharge line of the cooling medium; and

[0015] FIG. **5** shows a schematic diagram of the cooling device according to the invention with the associated control and heat exchangers.

[0016] A device according to the invention for cooling a pourable or flowable product is described below on the basis of the example of the production of hard ferrite materials, in particular a strontium ferrite ($SrFe_{12}O_{19}$). An example of such a hard ferrite is described in the application EP 08172099. The production of a ferrite is only one example of an application possibility for the device according to the invention for cooling a pourable or flowable product. Other examples can be found in the food industry, in the cooling of raw carbide melts, soft ferrites, general ceramics, building materials, cement, lime and many more. For example, the invention can be advantageously used anywhere where the starting product of a rotary kiln has to be cooled.

[0017] As is known, the production of a strontium ferrite requires that iron oxide, strontium carbonate and additives are first mixed in small amounts. The mixed material takes the form of granules or a slurry and is introduced into a rotary kiln.

[0018] At temperatures between 1400 and 1500° C., strontium hexaferrite forms as glowing granules with a diameter of between 4 and 25 mm, which leave the rotary kiln and should subsequently be cooled as efficiently and quickly as possible to a temperature of 240° C., preferably 75° C. and more preferably 50° C. or lower.

[0019] According to the invention, the starting product of the rotary kiln is therefore introduced into a vessel **1**, for example by way of a product chute **6**. In the vessel **1**, the product is transported or conveyed. This may advantageously take place by a spiral **3** welded to the inner wall of the rotary tube.

[0020] In other words, this embodiment is based on a rotary tube. However, it is also contemplated to use other vessels, for example those in which transport is performed by gravitational force alone, as for instance in a shaft cooler, possibly with the assistance of corresponding vibrating screens.

[0021] According to the invention, a plurality of cooling zones **13***a*, **13***b*, **13***c* are formed around the vessel **1** along the conveying direction.

[0022] These cooling zones **13***a*, **13***b*, **13***c* are designed such that they can be supplied with a respective cooling medium **15***a*, **15***b*, **15***c* independently of one another.

[0023] For this purpose, the vessel **1** is produced according to the invention as a double-shell tube, for example from sheet steel in a welded or rolled configuration. In the case of the example according to the invention, the first cooling zone **13***a* is designed to allow cooling with thermal oil as the cooling medium. The second and third zones **13***b*, **13***c* are configured for operation with water as the cooling medium.

[0024] The vessel **1** is provided at one end with a drive journal **5**, while an end journal is attached to the other end. The two journals are held in journal bearings **8**.

[0025] For supplying the cooling medium, feedthroughs **7** are provided in the region of the drive journal and end journal **5**. In the case of the preferred embodiment, these are rotary feedthroughs, at which flexible connection lines that are not shown in the figures may be provided.

[0026] The driving of the vessel **1** to make it rotate at a rotational speed of a few revolutions per minute is performed for example in the case of the embodiment by means of a high-powered chain drive (not shown) with a corresponding control, so that the rotational speed can be adapted to requirements.

[0027] In the case of the vessel **1** that is shown, the following conditions may be advantageously set for example for the production of strontium ferrite.

[0028] For a delivery rate of approximately 600 kg/h of strontium ferrite with a solids density of about 5 t/m^3 and a specific heat capacity of 0.8 to 1.0 kJ/(kg·K), a vessel **1** of altogether about 5 m in length and a diameter of about 60 cm has proven to be sufficient and effective.

[0029] According to the invention, the device for cooling the pourable or flowable product is equipped with a control means that makes it possible to control the cooling power of the individual cooling zones **13***a*, **13***b*, **13***c*. It is particularly advantageous to design the control means additionally as a closed-loop control system, appropriate sensors for temperature, flow rate, pressure, rotational speed of the rotary drum, speed of the pourable or flowable product or throughput of the product and appropriate final control elements together with a control circuit making automatic operation possible.

[0030] For example, with a temperature of the product inflow of about 1000° C. and a temperature of the product outflow of 75° C., the following setpoint values can be preset.

[0031] For the first cooling zone **13***a*, in which thermal oil is used as the cooling medium **15***a*, a temperature of the supplied cooling medium of 110° C. is chosen, and the temperature of the discharged cooling medium is controlled to 135° C. At approximately 5 m^3/h, the amount of thermal oil used for this is at a maximum pressure of 7 bar. The flow of the cooling medium preferably takes place counter to the conveying direction of the product.

[0032] In a second cooling zone **13***b*, there is a product inflow temperature of 600° C., and a temperature at the outflow of the product of 250° C. Water is used as the cooling medium, supplied at a temperature of 45° C. and discharged again at a temperature of 95° C. The rate of water is 4 m^3/h at a pressure of 3 bar.

[0033] In the third cooling zone **13***c*, the temperature of the product inflow is then 250° C., and at the product outflow there is a temperature of 75° C. For this purpose, water at a temperature of 10° C. is supplied as the cooling medium, and the discharge temperature of the water is about 12° C. The rate of water in the third cooling zone **13***c* may be set, for example, to 14 m^3/h. Here too, the pressure is preset at 3 bar.

[0034] According to the invention, for each cooling zone **13***a*, **13***b*, **13***c* the supply flow temperature of the supplied cooling medium, the return flow temperature of the discharged cooling medium, the product outflow temperature of the pourable or flowable product leaving the cooling zone, the pressure of the cooling medium or the throughput thereof per hour can be controlled within a wide range. While the respective supply flow temperatures, the flow rate of the cooling medium and the pressure thereof can be set as primary variables by suitable means, such as for instatance heat exchangers, pumps and valves, the control of the other parameters, such as for instance the return flow temperature of the discharged cooling medium, and the product outflow temperature of the pourable or flowable product leaving the cooling zone, is rather performed indirectly, for example by setting the rotational speed of the rotary tube, and consequently the speed of the pourable or flowable product, and the throughput of the pourable or flowable product.

[0035] With regard to the design of the spiral **3**, such as for instance the pitch, height of the flight land and the like, there are no particular restrictions; the aim is to ensure reliable transport with at the same time good heat dissipation to the wall of the rotary tube.

[0036] In the case of the device according to the invention, temperature sensors that measure the supply temperature of the cooling medium for each zone and also the return temperature of the cooling medium discharged from each cooling zone are preferably provided as sensors. Further temperature sensors, which for example are received in a hub with multiple spokes that may be provided at a transition from one cooling zone to the next and which transmit the measured value wirelessly or through a line in a shaft in the rotary tube, measure the temperature of the product leaving the respective cooling zone, or the temperature of the product at the product chute **6** and also the temperature of the product at the outlet of the cooling device. Furthermore, in the case of the device according to the invention, pressure sensors and flow sensors may be provided, in order to determine the pressure and the throughput of the cooling media.

[0037] By means of suitable final control elements, heat exchangers, pumps and valves, corresponding open-loop or closed-loop control is then possible.

[0038] In the case of the device according to the invention for cooling the pourable or flowable product, the supplying of the cooling medium of the first cooling zone **13***a* is preferably performed through a feedthrough **7**, specifically a rotary feedthrough, in the region of the one journal **5**. In order to prevent the hot thermal oil of the first cooling zone **13***a* from unnecessarily heating up the cooling medium of the second or third zone **13***b*, **13***c*, the cooling medium of the first zone **13***a* is discharged again on the same side on which it was also supplied.

[0039] By contrast with this, the cooling medium for the second and third cooling zones **13***b*, **13***c*, specifically water, is supplied on the other side of the vessel **1** by way of the other journal **5**, through corresponding rotary feedthroughs **7**. The flow of the cooling medium preferably takes place counter to the conveying direction of the product.

[0040] The cooling medium of the second and third cooling zones may either be discharged on the same side on which it is supplied, or it is possible for example to discharge the cooling medium of the middle cooling zone **13***b* also on the side on which the cooling medium of the first cooling zone **13***a* is supplied.

[0041] According to the invention, it is envisaged to use the thermal oil that was used as cooling medium of the first cooling zone **13***a* for providing service water for residential and office buildings by way of a heat exchanger. Alternatively, the heat of the thermal oil may also be used for preheating the starting materials of the ferrite production, specifically the iron oxide, strontium carbonate and the additives, before they enter the furnace, in order in this way to reduce the overall energy consumption of the furnace.

[0042] The cooling medium of the second cooling zone **13***b* may be used to provide heating energy for neighbouring residential or office buildings, or may be fed into a district heating system.

[0043] FIG. **2** shows a cross section through the device for cooling as shown in FIG. **1** along the line A-A. As shown in FIG. **2**, the vessel **1** has an inner tube **2**, thereby forming a

double-walled enclosure, in which the cooling medium **15** is conducted. Provided inside the vessel **1** is the spiral **1** or screw, which provides the conveyance of the product. Spokes **4** are welded to the wall of the rotary tube and connect the rotary tube to a journal or a shaft **5**. The journal **5**, which is guided in corresponding journals and bearings **8** on both sides of the vessel, turns the entire vessel **1** about its longitudinal axis.

[0044] FIG. **3** shows a cutout from FIG. **1** in the case of a preferred embodiment of the vessel **1** according to the invention. For better cooling, it is in this case provided that the double-walled shell of the vessel **1** is provided with baffles **12**, which conduct the cooling medium **16** in a suitable way. Between the individual cooling zones **13***a*, **13***b*, **13***c*, the double-walled region is divided off by corresponding separating bulkheads **10**. To simplify the construction, it is possible to provide supply or discharge lines **11** for the cooling medium on the outside of the vessel **1**.

[0045] Finally, FIG. **4** shows a further cutout from FIG. **1**, showing in greater detail the region of the product chute **6** and the journal **5**, and also the feedthroughs **7** for the supply and discharge of a cooling medium. The cooling medium is preferably supplied and discharged again by way of a rotary feedthrough in the region of the journal.

[0046] As described above, the device for cooling of the example shown in the figures is designed for a rate of 600 kg/h in the production of strontium ferrite. Calculations have shown that, with appropriately adapted control, the cooling device can also manage a throughput of up to 1000 kg/h of the same material. With the same coolant being used, however, the cooling is only adequate for cooling the strontium ferrite to values above 75° C. on the output side. Therefore, in a preferred embodiment, it is possible to provide a fourth cooling zone, i.e. to attach a further double-walled tube element to the rotary tube.

[0047] In the case of the embodiment shown in FIG. **1**, all of the cooling zones are designed to be of the same length. This is not in any way compulsory. Depending on the application, it is possible and meaningful to make the individual cooling zones shorter or longer.

[0048] If the cooling medium of the first zone **13***a* can be supplied at a very low temperature, it is possible to make the granules "explode" as a result of the thermal stress, so that energy can be saved in a downstream grinding step.

[0049] FIG. **5** schematically shows the construction of the cooling device **1** for the pourable or flowable product together with the heat exchangers and the associated control device.

[0050] In the case of the embodiment that is shown in FIG. **5**, the device for cooling is divided into three sections. The first section **13***a* is cooled as described above with thermal oil. By way of a pump **19***a* and a flowmeter **21***a*, the thermal oil is passed through the double-walled wall of the cooling device **1** for the pourable or flowable product. The thermal oil flowing out again from the cooling device **1** runs through a thermal sensor **23***a* to a changeover valve **29**. This changeover valve **29** is designed such that it can direct part of or the entire thermal oil to an emergency heat exchanger **17**.

[0051] In a similar way, the cooling medium of the middle section **13***b* of the cooling device is passed by way of the pump **19***b* and the flowmeter **21***b* into the cooling device, and by way of the thermal sensor **23***b* and the changeover valve **31** is supplied entirely or in part to the emergency heat exchanger **17**.

[0052] A further changeover valve **33** is provided at the inflow of the emergency heat exchanger **17**.

[0053] The emergency heat exchanger **17** is for its part connected by a cooling circuit to the changeover valve **33**, so that a continuous flow of water to a cooling basin **35** and back is possible. This cooling basin **35** is also the reservoir from which the cooling medium of the third section **13***c* of the cooling device is fed by way of a pump **19***c*, a flowmeter **21***c* and a thermal sensor **23***c*. In this way the heat can be reliably transported away from the cooling device.

[0054] Further thermal sensors **25**, **27** and **28** are provided, in order to measure the temperature at the outlet of the respective flows of the emergency heat exchanger **17**.

[0055] The system described above is the emergency or backup system. The valves **29** and **31** pass the respective cooling media on to the emergency heat exchanger **17** only if the actual consumers, which are not shown in FIG. **5**, are unable to accept the heat.

[0056] As described above, it is preferred to connect the thermal oil or the cooling water of the middle section **13***b* to respective heat accumulators, so that the waste heat can be used for example for providing service water or heating power. It is alternatively possible that the product supplied to the rotary kiln is preheated with the waste heat.

[0057] In the case of the example shown, two different cooling media, specifically thermal oil and water, are used. The invention is not restricted in this respect either. For example, it is also possible to operate a further cooling zone with air cooling, or to use another cooling medium, for example glycerin.

[0058] The device according to the invention for cooling a pourable or flowable product has proven to be particularly advantageous in connection with the production of a strontium ferrite in a rotary kiln. However, the invention is not restricted to this and can be advantageously used at many places where there is a need for a pourable or flowable product to be cooled quickly and effectively from a relatively high temperature, and at the same time it is desired to provide the waste heat in a suitable way for further use.

1. Device for cooling a pourable or flowable product, with:
a vessel (**1**) for receiving and conveying the pourable or flowable product; and
a plurality of cooling zones (**13***a*, **13***b*, **13***c*), which are formed along the vessel (**1**) in the conveying direction of the pourable or flowable product, characterized in that at least two cooling zones (**13***a*, **13***b*, **13***c*) are designed for being supplied with a respective cooling medium (**15***a*, **15***b*, **15***c*) independently of one another, the device also having a control means for controlling the cooling power of the individual cooling zones (**13***a*, **13***b*, **13***c*).

2. Device according to claim **1**, characterized in that the vessel (**1**) is a rotary drum with an internal spiral (**3**).

3. Device according to claim **2**, characterized in that the rotary drum (**1**) is of a double-walled configuration, and the cooling zones (**13***a*, **13***b*, **13***c*) are respective separate wall sections, which are formed for conducting the respective cooling medium (**15***a*, **15***b*, **15***c*) in the separate wall sections.

4. Device according to claim **2**, characterized in that the control means is designed for controlling at least one of the following parameters for at least one cooling zone by open-loop or closed-loop control:
the temperature of the supplied cooling medium,
the temperature of the discharged cooling medium,

the temperature of the pourable or flowable product leaving the cooling zone (**13***a*, **13***b*, **13***c*),
the flow rate of the cooling medium (**15***a*, **15***b*, **15***c*),
the pressure of the cooling medium (**15***a*, **15***b*, **15***c*),
the rotational speed of the rotary drum,
the speed of the pourable or flowable product and/or
the throughput of the pourable or flowable product.

5. Device according to claim **4**, characterized in that the cooling medium of at least one cooling zone (**13***a*) is thermal oil and the cooling medium of another cooling zone (**13***b*, **13***c*) is water.

6. Device according to claim **4**, characterized by a closed circuit for at least one of the cooling media (**15**) of a cooling zone (**13***a*, **13***b*, **13***c*) and with a heat exchanger for recovering the heat.

7. Device according to claim **6**, characterized in that the device has a plurality of sensors in order to measure for at least one cooling zone (**13***a*, **13***b*, **13***c*) the temperature of the supplied cooling medium, the temperature of the supplied cooling medium, the temperature of the discharged cooling medium, the temperature of the pourable or flowable product leaving the cooling zone (**13***a*, **13***b*, **13***c*), the flow rate of the cooling medium (**15***a*, **15***b*, **15***c*), the pressure of the cooling medium (**15***a*, **15***b*, **15***c*), the rotational speed of the rotary drum, the speed of the pourable or flowable product and/or the throughput of the pourable or flowable product.

8. Device according to claim **6**, characterized in that the device has a plurality of final control elements in order to influence for at least one cooling zone (**13***a*, **13***b*, **13***c*) the temperature of the supplied cooling medium, the temperature of the discharged cooling medium, the temperature of the pourable or flowable product leaving the cooling zone (**13***a*, **13***b*, **13***c*), the flow rate of the cooling medium (**15***a*, **15***b*, **15***c*), the pressure of the cooling medium, (**15***a*, **15***b*, **15***c*), the rotational speed of the rotary drum, the speed of the pourable or flowable product and/or the throughput of the pourable or flowable product.

9. Method for producing a ferrite, characterized by the steps of:
calcining the starting materials in a rotary kiln to produce granules; and
cooling the granules by means of a device for cooling a pourable or flowable product.

10. Device according to claim **3**, characterized in that the control means is designed for controlling at least one of the following parameters for at least one cooling zone by open-loop or closed-loop control:
the temperature of the supplied cooling medium,
the temperature of the discharged cooling medium,
the temperature of the pourable or flowable product leaving the cooling zone (**13***a*, **13***b*, **13***c*),
the flow rate of the cooling medium (**15***a*, **15***b*, **15***c*),
the pressure of the cooling medium (**15***a*, **15***b*, **15***c*),
the rotational speed of the rotary drum,
the speed of the pourable or flowable product and/or
the throughput of the pourable or flowable product.

11. Device according to claim **2**, characterized in that the cooling medium of at least one cooling zone (**13***a*) is thermal oil and the cooling medium of another cooling zone (**13***b*, **13***c*) is water.

12. Device according to claim **3**, characterized in that the cooling medium of at least one cooling zone (**13***a*) is thermal oil and the cooling medium of another cooling zone (**13***b*, **13***c*) is water.

13. Device according to claim **2**, characterized by a closed circuit for at least one of the cooling media (**15**) of a cooling zone (**13***a*, **13***b*, **13***c*) and with a heat exchanger for recovering the heat.

14. Device according to claim **3**, characterized by a closed circuit for at least one of the cooling media (**15**) of a cooling zone (**13***a*, **13***b*, **13***c*) and with a heat exchanger for recovering the heat.

15. Device according to claim **5**, characterized by a closed circuit for at least one of the cooling media (**15**) of a cooling zone (**13***a*, **13***b*, **13***c*) and with a heat exchanger for recovering the heat.

16. Device according to claim **7**, characterized in that the device has a plurality of final control elements in order to influence for at least one cooling zone (**13***a*, **13***b*, **13***c*) the temperature of the supplied cooling medium, the temperature of the discharged cooling medium, the temperature of the pourable or flowable product leaving the cooling zone (**13***a*, **13***b*, **13***c*), the flow rate of the cooling medium (**15***a*, **15***b*, **15***c*), the pressure of the cooling medium, (**15***a*, **15***b*, **15***c*), the rotational speed of the rotary drum, the speed of the pourable or flowable product and/or the throughput of the pourable or flowable product.

* * * * *