(12) INTERNATIONAL APPLICATION PUBLISHED UNDER THE PATENT COOPERATION TREATY (PCT)

(19) World Intellectual Property Organization
International Bureau

(43) International Publication Date
12 May 2005 (12.05.2005)

PCT

(10) International Publication Number
WO 2005/042307 A2

(51) International Patent Classification[7]: B60R

(21) International Application Number:
PCT/US2004/036124

(22) International Filing Date: 29 October 2004 (29.10.2004)

(25) Filing Language: English

(26) Publication Language: English

(30) Priority Data:
60/515,588 30 October 2003 (30.10.2003) US

(71) Applicant *(for all designated States except US)*: **GENTEX CORPORATION** [US/US]; 600 North Centennial Street, Zeeland, MI 49464 (US).

(72) Inventors; and

(75) Inventors/Applicants *(for US only)*: **TONAR, William, L.** [US/US]; 40 Cheyenne, Holland, MI 49424 (US). **ANDERSON, John, S.** [US/US]; 108 East 21st Street, Holland, MI 49423 (US). **FORGETTE, Jeffrey, A.** [US/US]; 3963 Sundial Avenue, Hudsonville, MI 49426 (US). **KAR, Kevin, B.** [US/US]; 13818 Lake Sedge Drive, Grand Haven, MI 49417 (US).

(74) Agents: **KING III, William, L.** et al.; King & Jovanovic, PLC, Suite 230, 170 College Avenue, Holland, MI 49423 (US).

(81) Designated States *(unless otherwise indicated, for every kind of national protection available)*: AE, AG, AL, AM, AT, AU, AZ, BA, BB, BG, BR, BW, BY, BZ, CA, CH, CN, CO, CR, CU, CZ, DE, DK, DM, DZ, EC, EE, EG, ES, FI, GB, GD, GE, GH, GM, HR, HU, ID, IL, IN, IS, JP, KE, KG, KP, KR, KZ, LC, LK, LR, LS, LT, LU, LV, MA, MD, MG, MK, MN, MW, MX, MZ, NA, NI, NO, NZ, OM, PG, PH, PL, PT, RO, RU, SC, SD, SE, SG, SK, SL, SY, TJ, TM, TN, TR, TT, TZ, UA, UG, US, UZ, VC, VN, YU, ZA, ZM, ZW.

(84) Designated States *(unless otherwise indicated, for every kind of regional protection available)*: ARIPO (BW, GH, GM, KE, LS, MW, MZ, NA, SD, SL, SZ, TZ, UG, ZM, ZW), Eurasian (AM, AZ, BY, KG, KZ, MD, RU, TJ, TM), European (AT, BE, BG, CH, CY, CZ, DE, DK, EE, ES, FI, FR, GB, GR, HU, IE, IT, LU, MC, NL, PL, PT, RO, SE, SI, SK, TR), OAPI (BF, BJ, CF, CG, CI, CM, GA, GN, GQ, GW, ML, MR, NE, SN, TD, TG).

Published:
— *without international search report and to be republished upon receipt of that report*

For two-letter codes and other abbreviations, refer to the "Guidance Notes on Codes and Abbreviations" appearing at the beginning of each regular issue of the PCT Gazette.

(54) Title: ELECTROCHROMIC DEVICE HAVING A SELF-CLEANING HYDROPHILIC COATING WITH AN ACID RESISTANT UNDER LAYER

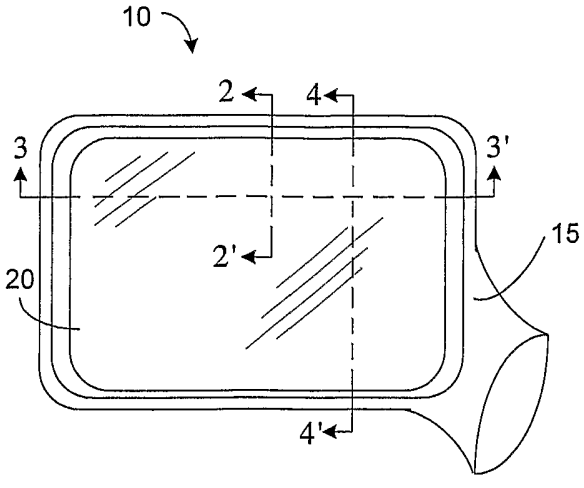

(57) Abstract: A variable reflectance rearview mirror for a vehicle, comprising: (a) a variable reflectance mirror element having a reflectivity that varies in response to an applied potential so as to exhibit at least a high reflectance state and a low reflectance state; (b) a self-cleaning, hydrophilic coating applied to a front surface of said mirror element; and (c) an acid resistant layer applied to a surface of the self-cleaning hydrophilic coating.

WO 2005/042307 A2

TITLE OF THE INVENTION

ELECTROCHROMIC DEVICE HAVING A SELF-CLEANING HYDROPHILIC COATING WITH AN ACID RESISTANT UNDER LAYER

CROSS-REFERENCE TO RELATED APPLICATIONS

[0001] This application claims the benefit of U.S. Provisional Application Serial No. 60/515,588, filed October 30, 2003, entitled "ELECTROCHROMIC DEVICE HAVING A SELF-CLEANING HYDROPHILIC COATING WITH AN ACID RESISTANT UNDER LAYER" which is hereby incorporated herein by reference in its entirety, including all references cited therein. This application also relates to U.S. Application Serial No. 09/602,919, filed June 23, 2000, entitled "AN ELECTRO-OPTIC DEVICE HAVING A SELF-CLEANING HYDROPHILIC COATING" as well as U.S. Patent No. 6,193,378, filed November 5, 1999, entitled "ELECTROCHROMIC DEVICE HAVING A SELF-CLEANING HYDROPHILIC COATING" both of which are hereby incorporated herein by reference in their entirety, including all references cited therein.

BACKGROUND OF THE INVENTION

1. Field of the Invention

[0002] The present invention relates in general to electrochromic devices and, more particularly, to electrochromic devices, such as rearview mirrors for a vehicle, which comprise a self-cleaning, hydrophilic coating having an acid resistant under layer.

2. Background Art

[0003] To enable water droplets and mist to be readily removed from windows of a vehicle, the windows are typically coated with a hydrophobic material that causes the water droplets to bead up on the outer surface of the window. These water beads are then

either swept away by windshield wipers or are blown off the window as the vehicle moves.

[0004] It is equally desirable to clear external rearview mirrors of water. However, if a hydrophobic coating is applied to the external rearview mirrors, the water beads formed on their surfaces cannot be effectively blown off since such mirrors are relatively shielded from direct airflow resulting from vehicle movement. Thus, water droplets or beads that are allowed to form on the surface of the mirrors remain on the mirror until they evaporate or grow in size until they fall from their own weight. These water droplets act as small lenses and distort the image reflected to the driver. Further, when the water droplets evaporate, water spots are left on the mirror, which are nearly as distracting as the water droplets that left the spots. In fog or high humidity, mist forms on the surfaces of the external mirrors. Such a mist can be so dense that it effectively renders the mirrors virtually unusable.

[0005] In an attempt to overcome the above-noted problems, mirror manufacturers have provided a hydrophilic coating on the outer surface of the external mirrors. See U.S. Patent No. 5,594,585. One such hydrophilic coating includes a single layer of silicon dioxide (SiO_2). The SiO_2 layer is relatively porous. Water on the mirror is absorbed uniformly across the surface of the mirror into the pores of the SiO_2 layer and subsequently evaporates leaving no water spots. One problem with such single layer coatings of SiO_2 is that oil, grease, and other contaminants can also fill the pores of the SiO_2 layer. Many such contaminants, particularly hydrocarbons like oil and grease, do not readily evaporate and hence clog the pores of the SiO_2 layer. When the pores of the

SiO_2 layer become clogged with car wax, oil, and grease, the mirror surface becomes hydrophobic and hence the water on the mirror tends to bead leading to the problems noted above.

[0006] A solution to the above problem pertaining to hydrophilic layers is to form the coating of a relatively thick layer (*e.g.*, about 1000-3000 Å or more) of titanium dioxide (TiO_2). See European Patent Application Publication No. EPO 816 466 A1. This coating exhibits photocatalytic properties when exposed to ultraviolet (UV) radiation. More specifically, the coating absorbs UV photons and, in the presence of water, generates highly reactive hydroxyl radicals that tend to oxidize organic materials that have collected in its pores or on its surface. Consequently, hydrocarbons, such as oil and grease, that have collected on the mirror are converted to carbon dioxide (CO_2) and hence are eventually removed from the mirror whenever UV radiation impinges upon the mirror surface. This particular coating is thus a self-cleaning hydrophilic coating.

[0007] One measure of the hydrophilicity of a particular coating is to measure the contact angle that the sides of a water drop form with the surface of the coating. An acceptable level of hydrophilicity is present in a mirror when the contact angle is less than about 30°, and more preferably less than about 20°, and most preferably less than about 10°. The above self-cleaning hydrophilic coating exhibits contact angles that decrease when exposed to UV radiation as a result of the self-cleaning action and the hydrophilic effect of the coating. The hydrophilic effect of this coating, however, tends to reverse over time when the mirror is not exposed to UV radiation.

[0008] The above self-cleaning hydrophilic coating can be improved by providing a film of less than about 1000 Å of SiO_2 on top of the relatively thick TiO_2 layer. See U.S. Patent No. 5,854,708. This seems to enhance the self-cleaning nature of the TiO_2 layer by reducing the dosage of UV radiation required and by maintaining the hydrophilic effect of the mirror over a longer period of time after the mirror is no longer exposed to UV radiation.

[0009] While the above hydrophilic coatings work well on conventional rearview mirrors having a chrome or silver layer on the rear surface of a glass substrate, they have not been utilized for use on variable reflectance mirrors, such as electrochromic mirrors, for several reasons. A first reason is that many of the above-noted hydrophilic coatings introduce colored double images and increase the low-end reflectivity of the variable reflectance mirror. For example, commercially available, outside electrochromic mirrors exist that have a low-end reflectivity of about 10 percent and a high-end reflectivity of about 45 to 85 percent. By providing a hydrophilic coating including a material such as TiO_2, which has a high index of refraction, on a glass surface of the mirror, a significant amount of the incident light is reflected at the glass/TiO_2 layer interface regardless of the variable reflectivity level of the mirror. Thus, the low-end reflectivity would be increased accordingly. Such a higher low-end reflectivity obviously significantly reduces the range of variable reflectance the mirror exhibits and thus reduces the effectiveness of the mirror in reducing annoying glare from the headlights of rearward vehicles.

[0010] Another reason that the prior hydrophilic coatings have not been utilized for use on many electro-optic elements even in applications where a higher low-end

reflectance may be acceptable or even desirable is that they impart significant coloration problems. Coatings such as those having a 1000 Å layer of TiO_2 covered with a 150 Å layer of SiO_2, exhibit a very purple hue. When used in a conventional mirror having chrome or silver applied to the rear surface of a glass element, such coloration is effectively reduced by the highly reflective chrome or silver layer, since the color neutral reflections from the highly reflective layer overwhelm the coloration of the lower reflectivity, hydrophilic coating layer. However, if used on an electrochromic element, such a hydrophilic coating would impart a very objectionable coloration, which is made worse by other components in the electrochromic element that can also introduce color.

[0011] Another reason that prior art coatings have not been utilized for use on many electro-optic elements is haze. This haze is particularly evident in hydrophilic coatings comprising dispersed TiO_2 particles in a binding media such as SiO_2. Titanium dioxide particles have a high refractive index and are very effective at scattering light. The amount of light scattered by such a first surface hydrophilic coating is small relative to the total light reflected in a conventional mirror. In an electrochromic mirror in the low reflectance state, however, most of the light is reflected off of the first surface and the ratio of scattered light to total reflected light is much higher, creating a foggy or unclear reflected image.

[0012] Due to the problems associated with providing a hydrophilic coating made of TiO_2 on an electrochromic mirror, manufacturers of such mirrors have opted to not use such hydrophilic coatings. As a result, electrochromic mirrors suffer from the above-noted adverse consequences caused by water drops and mist.

SUMMARY OF THE INVENTION

[0013] Accordingly, it is an aspect of the present invention to solve the above problems by providing a hydrophilic coating suitable for use on an electrochromic device, particularly for an electrochromic mirror. To achieve these and other aspects and advantages, a rearview mirror according to the present invention comprises a variable reflectance mirror element having a reflectivity that varies in response to an applied potential so as to exhibit at least a high reflectance state and a low reflectance state, and a self-cleaning, hydrophilic coating applied to a front surface of said mirror element. The rearview mirror preferably exhibits a reflectance of less than 20 percent in said low reflectance state, and also preferably exhibits a C* value less than about 25 in both said high and low reflectance states so as to exhibit substantial color neutrality and is substantially haze free in both high and low reflectance states. Moreover, the rearview mirror preferably comprises an acid resistant under layer which may or may not be color-suppressing. Indeed, the acid resistant under layer can be advantageous in any one of a number of environments, such as, but not limited to, metropolitan areas where acid rain and/or acidic atmospheric conditions exist – either sporadically or in perpetuity.

[0014] These and other features, advantages, and objects of the present invention will be further understood and appreciated by those skilled in the art by reference to the following specification, claims, and appended drawings.

BRIEF DESCRIPTION OF THE DRAWINGS

[0015] The invention will now be described with reference to the drawings wherein:

[0016] Fig. 1 is a front perspective view of an external rearview mirror assembly constructed in accordance with the present invention;

[0017] Fig. 2 is a cross section of a first embodiment of the external rearview mirror assembly shown in Fig. 1 along line 2-2′;

[0018] Fig. 3 is a cross section of a second embodiment of the external rearview mirror assembly shown in Fig. 1 along line 3-3′;

[0019] Fig. 4 is a cross section of a third embodiment of the external rearview mirror assembly shown in Fig. 1 along line 4-4′; and

[0020] Fig. 5 is a partial cross section of an electrochromic insulated window constructed in accordance with the present invention.

DETAILED DESCRIPTION OF THE INVENTION

[0021] Reference will now be made in detail to the present preferred embodiments of the invention, examples of which are illustrated in the accompanying drawings. Wherever possible, the same reference numerals will be used throughout the drawings to refer to the same or like parts.

[0022] Fig. 1 shows an external rearview mirror assembly 10 constructed in accordance with the present invention. As shown, mirror assembly 10 generally includes a housing 15 and a mirror 20 movably mounted in housing 15. Housing 15 may have any conventional structure suitably adapted for mounting assembly 10 to the exterior of a

vehicle.

[0023] Fig. 2 shows an exemplary construction of a first embodiment of mirror 20. As broadly described herein, mirror 20 includes a reflective element 100 having a reflectivity that may be varied in response to an applied voltage and an optical coating 130 applied to a front surface 112a of reflective element 100. Reflective element 100 preferably includes a first (or front) element 112 and a second (or rear) element 114 sealably bonded in spaced-apart relation to define a chamber. Front element 112 has a front surface 112a and a rear surface 112b, and rear element 114 has a front surface 114a and a rear surface 114b. For purposes of further reference, front surface 112a of front element 112 shall be referred to as the first surface, rear surface 112b of front element 112 shall be referred to as the second surface, front surface 114a of rear element 114 shall be referred to as the third surface, and rear surface 114b of rear element 114 shall be referred to as the fourth surface of reflective element 100. Preferably, both elements 112 and 114 are transparent and are sealably bonded by means of a seal member 116.

[0024] Reflective element 100 also includes a transparent first electrode 118 carried on one of second surface 112b and third surface 114a, and a second electrode 120 carried on one of second surface 112b and third surface 114a. First electrode 118 may have one or more layers and may function as a color suppression coating. Second electrode 120 may be reflective or transflective, or a separate reflector 122 may be provided on fourth surface 114b of mirror 100 in which case electrode 120 would be transparent. Preferably, however, second electrode 120 is reflective or transflective and the layer referenced by numeral 122 is an opaque layer or omitted entirely. Reflective

element 100 also preferably includes an electrochromic medium 124 contained in the chamber in electrical contact with first and second electrodes 118 and 120.

[0025] Electrochromic medium 124 includes electrochromic anodic and cathodic materials that can be grouped into the following categories:

[0026] (i) Single layer - the electrochromic medium is a single layer of material which may include small nonhomogeneous regions and includes solution-phase devices where a material is contained in solution in the ionically conducting electrolyte and remains in solution in the electrolyte when electrochemically oxidized or reduced. Solution-phase electroactive materials may be contained in the continuous solution phase of a cross-linked polymer matrix in accordance with the teachings of U.S. Patent No. 5,928,572, entitled "ELECTROCHROMIC LAYER AND DEVICES COMPRISING SAME" or International Patent Application No. PCT/US98/05570 entitled "ELECTROCHROMIC POLYMERIC SOLID FILMS, MANUFACTURING ELECTROCHROMIC DEVICES USING SUCH SOLID FILMS, AND PROCESSES FOR MAKING SUCH SOLID FILMS AND DEVICES."

[0027] At least three electroactive materials, at least two of which are electrochromic, can be combined to give a pre-selected color as described in U.S. Patent No. 6,020,987 entitled "ELECTROCHROMIC MEDIUM CAPABLE OF PRODUCING A PRE-SELECTED COLOR."

[0028] The anodic and cathodic materials can be combined or linked by a bridging unit as described in International Application No. PCT/WO97/EP498 entitled "ELECTROCHROMIC SYSTEM." It is also possible to link anodic materials or cathodic

materials by similar methods. The concepts described in these applications can further be combined to yield a variety of electrochromic materials that are linked.

[0029] Additionally, a single layer medium includes the medium where the anodic and cathodic materials can be incorporated into the polymer matrix as described in International Application No. PCT/WO98/EP3862 entitled "ELECTROCHROMIC POLYMER SYSTEM" or International Patent Application No. PCT/US98/05570 entitled "ELECTROCHROMIC POLYMERIC SOLID FILMS, MANUFACTURING ELECTROCHROMIC DEVICES USING SUCH SOLID FILMS, AND PROCESSES FOR MAKING SUCH SOLID FILMS AND DEVICES."

[0030] Also included is a medium where one or more materials in the medium undergoes a change in phase during the operation of the device, for example, a deposition system where a material contained in solution in the ionically conducting electrolyte, which forms a layer or partial layer on the electronically conducting electrode when electrochemically oxidized or reduced.

[0031] (ii) Multilayer - the medium is made up in layers and includes at least one material attached directly to an electronically conducting electrode or confined in close proximity thereto, which remains attached or confined when electrochemically oxidized or reduced. Examples of this type of electrochromic medium are the metal oxide films, such as tungsten oxide, iridium oxide, nickel oxide, and vanadium oxide. A medium, which contains one or more organic electrochromic layers, such as polythiophene, polyaniline, or polypyrrole attached to the electrode, would also be considered a multilayer medium.

[0032] In addition, the electrochromic medium may also contain other materials, such as light absorbers, light stabilizers, thermal stabilizers, antioxidants, thickeners, or viscosity modifiers.

[0033] Because reflective element 100 may have essentially any structure, the details of such structures are not further described. Examples of preferred electrochromic mirror constructions are disclosed in U.S. Patent No. 4,902,108, entitled "SINGLE-COMPARTMENT, SELF-ERASING, SOLUTION-PHASE ELECTROCHROMIC DEVICES, SOLUTIONS FOR USE THEREIN, AND USES THEREOF," issued February 20, 1990, to H.J. Byker; Canadian Patent No. 1,300,945, entitled "AUTOMATIC REARVIEW MIRROR SYSTEM FOR AUTOMOTIVE VEHICLES," issued May 19, 1992, to J. H. Bechtel et al.; U.S. Patent No. 5,128,799, entitled "VARIABLE REFLECTANCE MOTOR VEHICLE MIRROR," issued July 7, 1992, to H.J. Byker; U.S. Patent No. 5,202,787, entitled "ELECTRO-OPTIC DEVICE," issued April 13, 1993, to H.J. Byker et al.; U.S. Patent No. 5,204,778, entitled "CONTROL SYSTEM FOR AUTOMATIC REARVIEW MIRRORS," issued April 20, 1993, to J.H. Bechtel; U.S. Patent No. 5,278,693, entitled "TINTED SOLUTION-PHASE ELECTROCHROMIC DEVICES," issued January 11, 1994, to D.A. Theiste et al.; U.S. Patent No. 5,280,380, entitled "UV-STABILIZED COMPOSITIONS AND METHODS," issued January 18, 1994, to H.J. Byker; U.S. Patent No. 5,282,077, entitled "VARIABLE REFLECTANCE MIRROR," issued January 25, 1994, to H.J. Byker; U.S. Patent No. 5,294,376, entitled "BIPYRIDINIUM SALT SOLUTIONS," issued March 15, 1994, to H.J. Byker; U.S. Patent No. 5,336,448, entitled "ELECTROCHROMIC DEVICES WITH

BIPYRIDINIUM SALT SOLUTIONS," issued August 9, 1994, to H.J. Byker; U.S. Patent No. 5,434,407, entitled "AUTOMATIC REARVIEW MIRROR INCORPORATING LIGHT PIPE," issued July 18, 1995, to F.T. Bauer et al.; U.S. Patent No. 5,448,397, entitled "OUTSIDE AUTOMATIC REARVIEW MIRROR FOR AUTOMOTIVE VEHICLES," issued September 5, 1995, to W.L. Tonar; U.S. Patent No. 5,451,822, entitled "ELECTRONIC CONTROL SYSTEM," issued September 19, 1995, to J.H. Bechtel et al.; U.S. Patent No. 5,818,625, entitled "ELECTROCHROMIC REARVIEW MIRROR INCORPORATING A THIRD SURFACE METAL REFLECTOR," issued October 6, 1998, to Jeffrey A. Forgette et al.; and U.S. Patent Application No. 09/158,423, entitled "IMPROVED SEAL FOR ELECTROCHROMIC DEVICES," filed on September 21, 1998. Each of these patents and the patent application are commonly assigned with the present invention and the disclosures of each, including the references contained therein, are hereby incorporated herein in their entirety by reference.

[0034] If the mirror assembly includes a signal light, display, or other indicia behind the reflective electrode or reflective layer of reflective element 100, reflective element 100 is preferably constructed as disclosed in commonly assigned U.S. Patent Application No. 09/311,955, entitled "ELECTROCHROMIC REARVIEW MIRROR INCORPORATING A THIRD SURFACE METAL REFLECTOR AND A DISPLAY/SIGNAL LIGHT," filed on May 14, 1999, by W.L. Tonar et al., the disclosure of which is incorporated herein by reference. If reflective element 100 is convex or aspheric, as is common for passenger-side external rearview mirrors as well as external

driver-side rearview mirrors of cars in Japan and Europe, reflective element 100 may be made using thinner elements 112 and 114 while using a polymer matrix in the chamber formed therebetween as is disclosed in commonly assigned U.S. Patent No. 5,940,201 entitled "ELECTROCHROMIC MIRROR WITH TWO THIN GLASS ELEMENTS AND A GELLED ELECTROCHROMIC MEDIUM," filed on April 2, 1997. The entire disclosure, including the references contained therein, of this U.S. patent is incorporated herein by reference. The addition of the combined reflector/electrode 120 onto third surface 114a of reflective element 100 further helps remove any residual double imaging resulting from the two glass elements being out of parallel.

[0035] The electrochromic element of the present invention is preferably color neutral. In a color neutral electrochromic element, the element darkens to a gray color, which is more ascetically pleasing than any other color when used in an electrochromic mirror. U.S. Patent No. 6,020,987, entitled "ELECTROCHROMIC MEDIUM CAPABLE OF PRODUCING A PRE-SELECTED COLOR" discloses electrochromic media that are perceived to be gray throughout their normal range of operation. The entire disclosure of this patent is hereby incorporated herein by reference. U.S. Patent Application No. 09/311,955 entitled "ELECTROCHROMIC REARVIEW MIRROR INCORPORATING A THIRD SURFACE METAL REFLECTOR AND A DISPLAY/SIGNAL LIGHT" discloses additional electrochromic mirrors that exhibit substantial color neutrality while enabling displays to be positioned behind the reflective surface of the electrochromic mirror. The entire disclosure of this application is hereby incorporated herein by reference.

[0036] In addition to reflective element 100, mirror 20 further includes an optical coating 130. Optical coating 130 is a self-cleaning hydrophilic optical coating. Optical coating 130 preferably exhibits a reflectance at first surface 112a of reflective element 100 that is less than about 20 percent. If the reflectance at first surface 112a is greater than about 20 percent, noticeable double-imaging results, and the range of variable reflectance of reflective element 100 is significantly reduced. The variable reflectance mirror as a unit should have a reflectance of less than about 20 percent in its lowest reflectance state, and more preferably less than 15 percent, and most preferably less than 10 percent in most instances.

[0037] Optical coating 130 is also preferably sufficiently hydrophilic such that water droplets on a front surface of coating 130 exhibit a contact angle of less than about 30°, more preferably less than about 20°, and most preferably less than about 10°. If the contact angle is greater than about 30°, the coating 130 exhibits insufficient hydrophilic properties to prevent distracting water beads from forming. Optical coating 130 should also exhibit self-cleaning properties whereby the hydrophilic properties may be restored following exposure to UV radiation. As explained in further detail below, optical coating 130 should also have certain color characteristics so as to be color neutral or complement any coloration of the mirror element to render the mirror color neutral. For these purposes, coating 130 may include a color suppression coating 131 including one or more optical layers 132 and 134.

[0038] In one embodiment, optical coating 130 includes at least four layers of alternating high and low refractive index. Specifically, as shown in Fig. 2, optical coating

130 includes, in sequence, a first layer 132 having a high refractive index, a second layer 134 having a low refractive index, a third layer 136 having a high refractive index, and a fourth layer 138 having a low refractive index. Preferably, third layer 136 is made of a photocatalytic material, and fourth layer 138 is made of a material that will enhance the hydrophilic properties of the photocatalytic layer 136 by generating hydroxyl groups on its surface. Suitable hydrophilic enhancement materials include SiO_2 and Al_2O_3, with SiO_2 being most preferred. Suitable photocatalytic materials include TiO_2, ZnO, ZnO_2, SnO_2, ZnS, CdS, CdSe, Nb_2O_5, $KTaNbO_3$, $KTaO_3$, $SrTiO_3$, WO_3, $Bi2O_3$, $Fe2O_3$, and GaP, with TiO_2 being most preferred. By making the outermost layers TiO_2 and SiO_2, coating 130 exhibits good self-cleaning hydrophilic properties similar to those obtained by the prior art hydrophilic coatings applied to conventional mirrors having a reflector provided on the rear surface of a single front glass element. Preferably, the thickness of the SiO_2 outer layer is less than about 800 Å, more preferably less than 300 Å, and most preferably less than 150 Å. If the SiO_2 outer layer is too thick (*e.g.*, more than about 1000 Å), the underlying photocatalytic layer will not be able to "clean" the SiO_2 hydrophilic outer layer, at least not within a short time period. In the first embodiment, the two additional layers (layers 132 and 134) are provided to reduce the undesirable reflectance levels at the front surface of reflective element 100 and to provide any necessary color compensation/suppression so as to provide the desired coloration of the mirror. Preferably, layer 132 is made of a photocatalytic material and second layer 134 is made of a hydrophilic enhancement material so as to contribute to the hydrophilic and

photocatalytic properties of the coating. Thus, layer 132 may be made of any one of the photocatalytic materials described above or mixtures thereof, and layer 134 may be made of any of the hydrophilic enhancement materials described above or mixtures thereof. Preferably layer 132 is made of TiO_2, and layer 134 is made of SiO_2.

[0039] An alternative technique to using a high index layer and low index layer between the glass and the layer that is primarily comprised of photocatalytic metal oxide (*i.e.*, layer 136) is to obtain all of the desired properties while maintaining a minimum top layer thickness of primarily silica is to use a layer, or layers, of intermediate index. This layer(s) could be a single material such as tin oxide or a mixture of materials such as a blend of titania and silica. Among the materials that have been modeled as potentially useful are blends of titania and silica, which can be obtained through sol-gel deposition as well as other means, and tin oxide, indium tin oxide, and yttrium oxide. One can use a graded index between the glass and layer primarily composed of photocatalytic material as well.

[0040] Preferred mixed oxides used as a layer in the coating of the present invention would be titania blended with alumina, silica, tin oxide, or praseodymium oxide with titania comprising about 70 percent or greater of the oxide if the blended oxide is used for some or all of the photocatalytic layer. This allows for some generation of photocatalytic energy within the layer and transport of that energy through the layer.

[0041] Additionally, one can obtain roughly the same color and reflectance properties with a thinner top layer containing primarily silica or possibly no top layer if the index of the photocatalytic layer is lowered somewhat by blending materials, as

would be the case, for example, for a titania and silica mixture deposited by sol-gel. The lower index of the titania and silica blend layer imparts less reflectivity, requires less compensation optically, and therefore allows for a thinner top layer. This thinner top layer should allow for more of the photocatalytic effect to reach surface contaminants.

[0042] In accordance with the present invention, it will be understood that coating 131 (which comprises 132 and/or 134) may also preferably be resistant to acid. In particular, the acid resistant layer may comprise, for example, indium tin oxide (ITO), wherein the ratio of Sn to In is preferably greater than approximately 10:90 by weight. As will be shown experimentally herein below, as the concentration of Sn relative to In increases, the layer unexpectedly exhibits greater acid resistivity (i.e. the layer can be exposed to acidic environments while maintaining visually and/or functionally acceptable surface properties). Preferably, the ratio of Sn to In is greater than approximately 20:90 by weight. Even more preferably, the ratio of Sn to In is greater than approximately 35:65 by weight. However, as will be discussed below, it will be understood that, while functional, 100% tin oxide is not always desirable due to index of refraction and/or manufacturing issues.

[0042.1] In particular, tin oxide is known to form crystals of casseterite which are very close to a lattice match for rutile titanium dioxide. Therefore, layers of titanium dioxide formed on the surface of crystalline tin oxide will tend to form the rutile structure, which can be less desirable from a photocatalytic standpoint when compared to anatase titanium dioxide. Rutile titanium dioxide also has a higher index of refraction than the anatase form, which imparts higher reflectivity.

[0042.2] However, if the tin oxide is mixed with another material such as indium oxide, the tendency to form the casseterite structure is, to some degree depending on the amount of indium oxide present, suppressed. Other materials can be mixed with tin and reactively sputtered in the presence of O_2 to obtain a similar effect. Mixtures not containing tin may also be used. Examples include, but are not limited to, commercially available mixed metals from Asahi ceramics, such as tin silicon and/or zirconium silicon – just to name a few. Moreover, a thin layer of material such as silicon dioxide or aluminum oxide can be placed between a crystalline tin oxide layer and the titanium oxide layer in order to avoid the preference for the formation of rutile on tin oxide noted above.

ACID RESISTIVITY EXPERIMENT NO. 1

[0043] In support of the benefits of modifying the composition of the acid resistant layer, several experiments were conducted wherein 0.2 mL of 0.1 Normal (N) H_2SO_4 was applied to the surface (138) of each sample. All samples were left uncovered for the duration of the tests, whereby H_2SO_4 was allowed to concentrate due to evaporation. For each one of the identified experiments the acid resistant layer (131) was deposited onto soda-lime glass (112) via conventional magnetron sputtering at elevated temperatures. The approximate layer thicknesses for each sample were as follows: 100 Å of SiO_2 for layer 138, 2250 Å of TiO_2 for layer 136; and 600 Å of the acid resistant material for layer 131.

[0044] Provided below are the experimental conditions and associated results for Experiment No. 1.

VISUAL ACID RESISTIVITY RESULTS FOR EXPERIMENT NO. 1

Test Conditions	Underlayer	Post Acid Visual Inspection
48 hours of H_2SO_4 at 22°C	90%In/10%Sn	No visual change
	80%In/20%Sn	No visual change
	100%SnO_2	No visual change
48 hours of H_2SO_4 at 30°C w/UV (blacklight 1 mW/cm^2)	90%In/10%Sn	Visual surface damage
	80%In/20%Sn	No visual change
	100%SnO_2	No visual change
15 hours of H_2SO_4 at 50°C	90%In/10%Sn	Visual surface damage
	80%In/20%Sn	Nominal haze
	100%SnO_2	No visual change

[0045] As can be seen from the experiments above, 90%In/10%Sn (ITO) exhibited visual surface damage for two experiments, while 80%In/20%Sn (ITO) exhibited no visual change for two experiments and only nominal (acceptable) haze when exposed to H_2SO_4 at 50°C for 15 hours.

ACID RESISTIVITY EXPERIMENT NO. 2

[0045.1] In further support of the benefits of modifying the composition of the acid resistant layer, several experiments were conducted wherein varying concentrations of H_2SO_4 was applied to surface (138) of each sample, which in this series of experiments comprised covered cells formed by placing a conventional o-ring on surface (138) of the test glass. Consistent with Experiment No. 1, the acid resistant layer (131) was deposited onto soda-lime glass (112) via conventional magnetron sputtering at elevated temperatures. The approximate layer thicknesses for each sample were as follows: 100 Å

of SiO_2 for layer 138, 2250 Å of TiO_2 for layer 136; and 600 Å of the acid resistant material for layer 131. A soda lime glass cover slightly larger than the o-ring was then placed on top of the o-ring. Binder clips were then attached to each side of the cell to compress the o-ring and form a sealed cell. A small fill hole in the cover glass allowed each cell to be filled with acid using a syringe. Each cell was filled using with the appropriate concentration of H_2SO_4 (0.5 Normal (N), 1N, 2N, 4N, 8N, 16N, 24N, and 35N). The entire apparatus was then placed in a 50°C oven and allowed to age 15-17 hours. After the age period at 50°C, the apparatus was removed from the oven, the cells were removed, and the glass strip was rinsed with water. The glass strip was then visually inspected under normal lighting to compare damage due to acid attack on the hydrophilic coating.

[0045.2] Provided below are the experimental results associated with Experiment No. 2.

VISUAL ACID RESISTIVITY RESULTS FOR EXPERIMENT NO. 2

Test Conditions	Underlayer	Post Acid Visual Inspection
15-17 hours of 0.5N H_2SO_4 @ 50°C	90%In/10%Sn	Very slight pink haze
15-17 hours of 0.5N H_2SO_4 @ 50°C	80%In/20%Sn	No visual change
15-17 hours of 1N H_2SO_4 @ 50°C	90%In/10%Sn	Pink/green haze
15-17 hours of 1N H_2SO_4 @ 50°C	80%In/20%Sn	No visual change
15-17 hours of 2N H_2SO_4 @ 50°C	90%In/10%Sn	Hydrophilic coating compromised (i.e. removed)
15-17 hours of 2N H_2SO_4 @ 50°C	80%In/20%Sn	Slight pink/green haze
15-17 hours of 4N H_2SO_4 @ 50°C	90%In/10%Sn	Hydrophilic coating compromised (i.e. removed)
15-17 hours of 4N H_2SO_4 @ 50°C	80%In/20%Sn	Pink/green haze
15-17 hours of 8N H_2SO_4 @ 50°C	90%In/10%Sn	Hydrophilic coating compromised (i.e. removed)
15-17 hours of 8N H_2SO_4 @ 50°C	80%In/20%Sn	Pink/green haze
15-17 hours of 16N H_2SO_4 @ 50°C	90%In/10%Sn	Hydrophilic coating compromised (i.e. removed)
15-17 hours of 16N H_2SO_4 @ 50°C	80%In/20%Sn	Slight pink/green haze
15-17 hours of 24N H_2SO_4 @ 50°C	90%In/10%Sn	Pink/green haze
15-17 hours of 24N H_2SO_4 @ 50°C	80%In/20%Sn	No visual change
15-17 hours of 35N H_2SO_4 @ 50°C	90%In/10%Sn	Slight pink/green haze
15-17 hours of 35N H_2SO_4 @ 50°C	80%In/20%Sn	No visual change

[0045.3] As can be seen from the experiments above, the 80%In/20%Sn (ITO) out performed the 90%In/10%Sn (ITO) at every concentration, which verifies that increasing the tin content of the under layer of the hydrophilic coating results in a significant increase in acid resistance via visual inspection under normal light conditions.

ACID RESISTIVITY EXPERIMENT NO. 3

[0045.4] In yet further support of the benefits of modifying the composition of the acid resistant layer, several experiments were conducted wherein varying concentrations of H_2SO_4 was applied to acid resistant layer (131) of each sample, which in this series of

experiments comprised covered cells formed by placing an o-ring on acid resistant layer (131) of the test glass. Specifically, the acid resistant layer (131) was deposited onto soda-lime glass (112) via conventional magnetron sputtering at elevated temperatures. The approximate layer thicknesses for each sample were as follows: 600 Å of the acid resistant material for layer 131. A soda lime glass cover slightly larger than the o-ring was then placed on top of the o-ring. Binder clips were then attached to each side of the cell to compress the o-ring and form a sealed cell. A small fill hole in the cover glass allowed each cell to be filled with acid using a syringe. Each cell was filled with the appropriate concentration of H_2SO_4 (0.1N, 1N, 4N). All of the samples were set aside for 17 hours at room temperature. After 17 hours, the samples were removed, and the glass was rinsed with water. The glass was then visually inspected under normal lighting to compare damage due to acid attack on the coating. The first table includes the visual inspection results. In order to better quantify the acid damage; the change in transmission due to acid damage was measured using a conventional Macbeth 7000A spectrophotometer. The transmission was then normalized to compare the change in transmission due to loss of coating. The second table contains the comparison of transmission data.

[0045.5] Provided below are the experimental results associated with Experiment No. 3.

VISUAL ACID RESISTIVITY RESULTS FOR EXPERIMENT NO. 3

Test Conditions	Underlayer	Post Acid Visual Inspection
17 hours of 0.1N H_2SO_4 @ 22°C	100%Sn	No visual change
17 hours of 0.1N H_2SO_4 @ 22°C	90%Sn/10%In	No visual change
17 hours of 0.1N H_2SO_4 @ 22°C	65%Sn/35%In	No visual change
17 hours of 0.1N H_2SO_4 @ 22°C	20%Sn/80%In	Slight haze
17 hours of 0.1N H_2SO_4 @ 22°C	10%Sn/90%In	Moderate/Severe haze
17 hours of 1N H_2SO_4 @ 22°C	100%Sn	No visual change
17 hours of 1N H_2SO_4 @ 22°C	90%Sn/10%In	Slight haze
17 hours of 1N H_2SO_4 @ 22°C	65%Sn/35%In	Slight haze
17 hours of 1N H_2SO_4 @ 22°C	20%Sn/80%In	Hydrophilic coating compromised (i.e. removed)
17 hours of 1N H_2SO_4 @ 22°C	10%Sn/90%In	Hydrophilic coating compromised (i.e. removed)
17 hours of 4N H_2SO_4 @ 22°C	100%Sn	No visual change
17 hours of 4N H_2SO_4 @ 22°C	90%Sn/10%In	Slight haze
17 hours of 4N H_2SO_4 @ 22°C	65%Sn/35%In	Slight haze
17 hours of 4N H_2SO_4 @ 22°C	20%Sn/80%In	Hydrophilic coating compromised (i.e. removed)
17 hours of 4N H_2SO_4 @ 22°C	10%Sn/90%In	Hydrophilic coating compromised (i.e. removed)

QUANTITATIVE ACID RESISTIVITY RESULTS FOR EXPERIMENT NO. 3

Coating Transmission vs. H_2SO_4 Concentration

	Measured Transmission (%T)			
	Initial	0.1N	1N	4N
100%Sn	77.7	77.8	77.9	77.8
90%Sn/10%In	76.7	77.3	78.8	78.5
35%Sn/65%In	74.3	74.9	77.2	77.0
20%Sn/80%In	79.3	82.2	89.7	89.9
10%Sn/90%In	79.5	87.2	90.7	90.6

	Normalized Transmission		
H_2SO_4 Concentration →	0.1N	1N	4N
100%Sn	0.1%	0.1%	0.1%
90%Sn/10%In	0.8%	2.7%	2.3%
35%Sn/65%In	0.8%	3.9%	3.7%
20%Sn/80%In	3.7%	13.2%	13.4%
10%Sn/90%In	9.6%	14.0%	14.0%

[0045.6] As can be seen from the experiments above, a positive correlation exists relative to Sn content and acid resistance. Most notably, 100%Sn was untouched by 0.1N, 1.0N, and 4N sulfuric acid, while 10%Sn and 20%Sn coatings were completely removed by both 1N and 4N sulfuric acid.

[0046] As described below with respect to the second and third embodiments, color suppression coating 131 may also include a layer 150 of an electrically conductive transparent material such as ITO.

[0047] The index of refraction of a titania film obtained from a given coating system can vary substantially with the choice of coating conditions and could be chosen to give the lowest index possible while maintaining sufficient amounts of anatase or rutile form in the film and demonstrating adequate abrasion resistance and physical durability. The lower index obtained in this fashion would yield similar advantages to lowering the index by mixing titania with a lower index material. Ron Willey, in his book "Practical

Design and Production of Optical Thin Films," Marcel Dekker, 1996, cites an experiment where temperature of the substrate, partial pressure of oxygen, and speed of deposition vary the index of refraction of the titania deposited from about n=2.1 to n=2.4.

[0048] Materials used for transparent second surface conductors are typically materials whose index of refraction is about 1.9 or greater and have their color minimized by using half wave thickness multiples or by using the thinnest layer possible for the application or by the use of one of several "non-iridescent glass structures." These non-iridescent structures will typically use either a high and low index layer under the high index conductive coating (see, for example, U.S. Patent No. 4,377,613 and U.S. Patent No. 4,419,386 by Roy Gordon), or an intermediate index layer (see U.S. Patent No. 4,308,316 by Roy Gordon) or graded index layer (see U.S. Patent No. 4,440,822 by Roy Gordon).

[0049] Fluorine doped tin oxide conductors using a non-iridescent structure are commercially available from Libbey-Owens-Ford and are used as the second surface transparent conductors in most inside automotive electrochromic mirrors produced at the present time. The dark state color of devices using this second surface coating stack is superior to that of elements using optical half wave thickness indium tin oxide (ITO) when it is used as a second surface conductive coating. Drawbacks of this non-iridescent coating are mentioned elsewhere in this document. Hydrophilic and photocatalytic coating stacks with less than about 800 Å silica top layer, such as 1000 Å titania 500 Å silica, would still impart unacceptable color and/or reflectivity when used as a first surface coating stack in conjunction with this non-iridescent second surface conductor

and other non-iridescent second surface structures, per the previous paragraph, that are not designed to compensate for the color of hydrophilic coating stacks on the opposing surface. Techniques would still need to be applied per the present embodiment at the first surface to reduce C* of the system in the dark state if these coatings were used on the second surface.

[0050] ITO layers typically used as second surface conductors are either very thin (approximately 200-250 Å), which minimizes the optical effect of the material by making it as thin as possible while maintaining sheet resistances adequate for many display devices, or multiples of half wave optical thickness (about 1400 Å), which minimizes the overall reflectivity of the coating. In either case, the addition of photocatalytic hydrophilic coating stacks on opposing surfaces per the previous paragraph would create unacceptable color and/or reflectivity in conjunction with the use of these layer thicknesses of ITO used as the second surface conductor. Again, techniques would need to be applied per the present embodiment at the first surface to reduce the C* of the system in the dark state.

[0051] In somewhat analogous fashion, for modification of the first surface-coating stack to optimize the color and reflectivity of the system containing both first and second surface coatings, one can modify the second surface-coating stack to optimize the color of the system. One would do this by essentially creating a compensating color at the second surface in order to make reflectance of the system more uniform across the visible spectrum, while still maintaining relatively low overall reflectance. For example, the 1000 Å titania 500 Å silica stack discussed in several places within this document has a

reddish-purple color due to having somewhat higher reflectance in both the violet and red portions of the spectrum than it has in the green. A second surface coating with green color, such as 3/4 wave optical thickness ITO, will result in a lower C* value for the dark state system than a system with a more standard thickness of ITO of half wave optical thickness, which is not green in color. Additionally, one can modify thicknesses of layers or choose materials with somewhat different indices in the non-iridescent structures mentioned in order to create a compensating color second surface as well.

[0052] These second surface compensating color layers will add reflectance at relative reflectance minima in the first surface coating stack. If desired, these second surface coating stacks can add reflectance without a first surface coating present. For example, the three quarter wave optical thickness ITO layer mentioned above is at a relative maximum for reflectance and when used on the second surface will result in an element with higher dark state reflectivity than a similarly constructed element with half wave optical thickness ITO on the second surface whether or not additional first surface coatings are present.

[0053] Another method of color compensating the first surface is through pre-selecting the color of the electrochromic medium in the dark state in accordance with the teachings of commonly assigned U.S. Patent No. 6,020,987, entitled "ELECTROCHROMIC MEDIUM CAPABLE OF PRODUCING A PRE-SELECTED COLOR." Again, by using first surface coatings of 1000 Å titania followed by 500 Å silica as an example, the following modification would assist in lowering the C* value of an electrochromic mirror when activated. If, in that case, the color of the electrochromic

medium was selected so that it was less absorbing in the green region when activated, the higher reflection of green wavelengths of light from the third or fourth surface reflector of the element would help balance the reflection of the unit in the dark state.

[0054] Combinations of the aforementioned concepts for the first, second surface, and electrochromic medium are also potentially advantageous for the design.

[0055] At times, especially on convex or aspheric mirrors, it may be desirable to limit the low end reflectance of an electro-optic mirror to about 12 percent or greater to compensate for the reduced brightness of images reflected off of the convex or aspheric surface. Maintaining a tight tolerance on this increased low-end reflectance value is difficult to achieve by controlling the full dark absorption of the electro-optic media alone, which is accomplished by either reducing the applied voltage or altering the concentration of the electro-optic materials in the electro-optic medium. It is much more preferred to maintain and control the tolerance on this increased low-end reflectance with a first surface film that would have a higher refractive index and therefore higher first surface reflectance than glass alone. Maintaining uniformity of the increased low-end reflectance from batch to batch in manufacturing is much easier with a first surface film than with the electro-optic media. As noted above, photocatalytic layers, such as titanium dioxide have such a higher refractive index. The dark state reflectivity can be raised using first surface coatings that are non-photocatalytic in nature as well. For example, by using quarter wave optical thickness aluminum oxide as the only layer on the first surface, the dark state reflectance of an element can be raised by approximately three to four percent.

[0056] It is known that the optical properties for a deposited film vary depending

on deposition conditions that include partial pressure of oxygen gas, temperature of the substrate speed of deposition, and the like. In particular, the index of refraction for a particular set of parameters on a particular system will affect the optimum layer thicknesses for obtaining the optical properties being discussed.

[0057] The discussions regarding the photocatalytic and hydrophilic properties of titania and like photocatalytic materials and silica and like hydrophilic materials are generally applicable to layers of mixed materials as long as the mixtures retain the basic properties of photocatalytic activity and/or hydrophilicity. Abrasion resistance is also a major consideration in the outermost layer. EP 0816466A1 describes an abrasion resistant, photocatalytic, hydrophilic layer of silica blended titania, as well as a layer of tin oxide blended titania with similar properties. U.S. Patent No. 5,755,867 describes photocatalytic blends of silica and titania obtained through use of these mixtures. These coatings would likely require modifications to change their optical properties suitable for use on an electrochromic device. The potential advantages of these optical property modifications to this invention are discussed further below.

[0058] In some variations of this invention, it may be preferable to include a layer of material between the substrate, especially if it is soda lime glass, and the photocatalytic layer(s) to serve as a barrier against sodium leaching in particular. If this layer is close to the index of refraction of the substrate, such as silica on soda lime glass, it will not affect the optical properties of the system greatly and should not be considered as circumventing the spirit of the invention with regards to contrasting optical properties between layers.

[0059] To expedite the evaporation of water on the mirror and prevent the freezing of thin films of water on the mirror, a heating element 122 may optionally be provided on the fourth surface 114b of reflective element 100. Alternatively, as described below, one of the transparent front surface films could be formed of an electrically conductive material and hence function as a heater.

[0060] A second embodiment of the invention is shown in Fig. 3. As illustrated, electrochromic mirror 100 has a similar construction to that shown in Fig. 2. Optical coating 130, however, differs in that it includes a transparent electrically conductive coating 150 that underlies hydrophilic layer 136. Suitable transparent conductors include ITO, ZnO, and SnO_2 (fluorine doped). Because each of these transparent conductors has a refractive index between that of the glass (1.45) of element 112 and the TiO_2 (~2.3) of layer 136, they make an excellent optical sublayer by reducing color and reflectivity as a result of applying the hydrophilic layer 136.

[0061] An additional advantage resulting from the use of a transparent conductor 150 on the front surface of mirror element 100 is that an electric current may be passed through layer 150 such that layer 150 functions as a heater. Because hydrophilic coatings tend to spread water out into a thin film over the surface of the mirror, the water tends to freeze more quickly and impair vision. Thus, transparent conductive layer 150 can double both as a heater and a color/reflection suppression layer.

[0062] The provision of a heater layer 150 on the front surface of the mirror provides several advantages. First, it removes the need to provide a costly heater to the back of the mirror. Additionally, heater 150 provides heat at the front surface of the

mirror where the heat is needed most to clear the mirror of frost. Current heaters applied to the back of the mirror must heat through the whole mirror mass to reach the frost film on the front surface.

[0063] To apply a voltage across layer 150, a pair of buss clips 152 and 154 may be secured at the top and bottom of mirror 100 or on opposite sides so as to not interfere with the buss clips that are otherwise used to apply a voltage across electrochromic medium 124 via conductors 118 and 120.

[0064] Alternatively, as shown in Fig. 4, a common buss clip 160 may be provided to electrically couple electrode 118 and one edge of heater layer 150 to ground while separate electrical buss connections 162 and 164 are provided to respectively couple the other side of heater layer 150 and electrode 120 to a positive voltage potential.

[0065] To illustrate the properties and advantages of the present invention, examples are provided below. The following illustrative examples are not intended to limit the scope of the present invention but to illustrate its application and use. In these examples, references are made to the spectral properties of an electrochromic mirror constructed in accordance with the parameters specified in the example. In discussing colors, it is useful to refer to the Commission Internationale de I'Eclairage's (CIE) 1976 CIELAB Chromaticity Diagram (commonly referred to as the L*a*b* chart) as well as tristimulus values x, y, or z. The technology of color is relatively complex, but a fairly comprehensive discussion is given by F.W. Billmeyer and M. Saltzman in *Principles of Color Technology*, 2nd Edition, J. Wiley and Sons Inc. (1981), and the present disclosure, as it relates to color technology and terminology, generally follows that discussion. On

the L*a*b* chart, L* defines lightness, a* denotes the red/green value, and b* denotes the yellow/blue value. Each of the electrochromic media has an absorption spectra at each particular voltage that may be converted to a three-number designation, their L*a*b* values. To calculate a set of color coordinates, such as L*a*b* values, from the spectral transmission or reflectance, two additional items are required. One is the spectral power distribution of the source or illuminant. The present disclosure uses CIE Standard Illuminant D_{65}. The second item needed is the spectral response of the observer. The present disclosure uses the 2-degree CIE standard observer. The illuminant/observer combination used is represented as D_{65}/2 degree. Many of the examples below refer to a value Y from the 1931 CIE Standard since it corresponds more closely to the reflectance than L*. The value C*, which is also described below, is equal to the square root of $(a^*)^2+(b^*)^2$, and hence, provides a measure for quantifying color neutrality. To obtain an electrochromic mirror having relative color neutrality, the C* value of the mirror should be less than 25. Preferably, the C* value is less than 20, more preferably is less than 15, and even more preferably is less than about 10.

EXAMPLE 1

[0066] Two identical electrochromic mirrors were constructed having a rear element made with 2.2 mm thick glass with a layer of chrome applied to the front surface of the rear element and a layer of rhodium applied on top of the layer of chrome using vacuum deposition. Both mirrors included a front transparent element made of 1.1 mm thick glass, which was coated on its rear surface with a transparent conductive ITO coating of 1/2 wave optical thickness. The front surfaces of the front transparent elements

were covered by a coating that included a first layer of 200 Å thick TiO_2, a second layer of 250 Å thick SiO_2, a third layer of 1000 Å TiO_2, and a fourth layer of 500 Å thick SiO_2. For each mirror, an epoxy seal was laid about the perimeter of the two coated glass substrates except for a small port used to vacuum fill the cell with electrochromic solution. The seal had a thickness of about 137 microns maintained by glass spacer beads. The elements were filled with an electrochromic solution including propylene carbonate containing 3 percent by weight polymethylmethacrylate, 30 Mm Tinuvin P (UV absorber), 38 Mm N,N'-dioctyl-4, 4'bipyridinium bis(tetrafluoroborate), 27 Mm 5,10-dihydrodimethylphenazine and the ports were then plugged with a UV curable adhesive. Electrical contact buss clips were electrically coupled to the transparent conductors.

[0067] In the high reflectance state (with no potential applied to the contact buss clips), the electrochromic mirrors had the following averaged values: L*=78.26, a*=-2.96, b*=4.25, C*=5.18, and Y=53.7. In the lowest reflectance state (with a potential of 1.2 V applied), the electrochromic mirrors had the following averaged values: L*=36.86, a*=6.59, b*=-3.51, C*=7.5, and Y=9.46. The average contact angle that a drop of water formed on the surfaces of the electrochromic mirrors after it was cleaned was 7°.

[0068] For purposes of comparison, two similar electrochromic mirrors were constructed, but without any first surface coating. These two mirrors had identical construction. In the high reflectance state, the electrochromic mirrors had the following averaged values: L*=78.93, a*=-2.37, b*=2.55, C*=3.48, and Y=54.81. In the lowest reflectance state, the electrochromic mirrors had the following averaged values: L*=29.46, a*=0.55, b*=-16.28, C*=16.29, and Y=6.02. As this comparison shows, the

electrochromic mirrors having the inventive hydrophilic coating unexpectedly and surprisingly had better color neutrality than similarly constructed electrochromic mirrors not having such a hydrophilic coating. Additionally, the comparison shows that the addition of the hydrophilic coating does not appreciably increase the low-end reflectance of the mirrors.

EXAMPLE 2

[0069] An electrochromic mirror was constructed in accordance with the description of Example 1 with the exception that a different first surface coating stack was deposited. The first surface stack consisted of a first layer of ITO having a thickness of approximately 700 Å, a second layer of TiO_2 having thickness of 2400 Å, and a third layer of SiO_2 having a thickness of approximately 100 Å. The physical thickness of the ITO layer corresponds to approximately 1/4 wave optical thickness at 500 nm and the physical thickness of the TiO_2 layer corresponds to approximately 1 wave optical thickness at 550 nm. The proportion of anatase titania to rutile titania in the TiO_2 layer was determined to be about 89 percent anatase form and 11 percent rutile form from X-ray diffraction analysis of a similar piece taken from glass run in the same timeframe under similar coating parameters.

[0070] In the high reflectance state, the electrochromic mirror had the following averaged values: L*=80.37, a*=-2.49, b*=3.22, C*=4.07, and Y=57.35. In the lowest reflectance state (with a potential of 1.2 V applied), the electrochromic mirror had the following averaged values: L*=48.46, a*=-6.23, b*=-4.64, C*=7.77, and Y=17.16. The contact angle of a water droplet on the surface of this electrochromic mirror after

cleaning was 4°. This example illustrates the suitability of an ITO color suppression layer 150 underlying the hydrophilic layers 136 and 138.

EXAMPLE 3

[0071] An electrochromic mirror was modeled using commercially available thin film modeling software. In this example, the modeling software was FILMSTAR available from FTG Software Associates, Princeton, New Jersey. The electrochromic mirror that was modeled had the same constructions as in Examples 1 and 2 above except for the construction of the optical coating applied to the front surface of the mirror. Additionally, the mirror was only modeled in a dark state assuming the completely absorbing electrochromic fluid of index 1.43. The optical coating stack consisted of a first layer of SnO_2 having a thickness of 720 Å and a refractive index of 1.90 at 550 nm, a second layer of dense TiO_2 having a thickness of 1552 Å and a refractive index of about 2.43 at 550 nm, a third layer of a material with an index of about 2.31 at 550 nm and a wavelength-dependent refractive index similar to TiO_2 applied at a thickness of 538 Å, and a fourth layer of SiO_2 having a refractive index of 1.46 at 550 nm and a thickness of 100 Å. The electrochromic mirror had the following averaged values: L*=43.34, a*=8.84, b*=-12.86, C*=15.2, and Y=13.38.

[0072] The material with an index of 2.31 constituting the third layer may be attained in several ways, including the following which could be used in combination or singularly: (1) reducing the density of the titania in the layer, (2) changing the ratio of anatase to rutile titania in the layer, and/or (3) creating a mixed oxide of titania and at least one other metal oxide with lower refractive index, such as Al_2O_3, SiO_2 or SnO_2

among others. It should be noted that the electrochromic materials used in Examples 1 and 2 above do not become a perfectly absorbing layer upon application of voltage, and therefore, the model based on a completely absorbing electrochromic layer will tend to be slightly lower in predicted luminous reflectance Y than the actual device.

EXAMPLE 4

[0073] An electrochromic mirror was modeled having the exact same parameters as in Example 3, but replacing the 1552 Å-thick second layer of TiO_2 of index 2.43 at 550 nm and the 538 Å-thick third layer of index 2.31 at 550 nm, with a single layer of 2100 Å-thick material having a refractive index of 2.31 at 550 nm. The electrochromic mirror so modeled had the following predicted averaged values: L*=43.34, a*=0.53, b*=-6.21, C*=6.23, and Y=15.41.

[0074] In comparing Examples 3 and 4, it will be noted that the layers of index 2.43 and 2.31 in Example 3 yield a unit with lower Y than an equal thickness of material with refractive index of 2.31 in the same stack. Nevertheless, the color neutrality value C* is lower in the fourth example.

EXAMPLE 5

[0075] An electrochromic mirror was modeled using the same parameters as in Example 3, but with the following first surface coating stack: a first layer of Ta_2O_5 having a thickness of 161 Å and a refractive index of about 2.13 at 550 nm; a second layer of Al_2O_3 having a thickness of 442 Å and a refractive index of about 1.67 at 550 nm; a third layer of TiO_2 having a thickness of 541 Å and a refractive index of about 2.43 at 550 nm; a fourth layer of TiO_2 or TiO_2 mixed with another oxide and having a

thickness of 554 Å and a refractive index of about 2.31 at 550 nm; and a fifth layer of SiO_2 having a thickness of 100 Å and a refractive index of about 1.46 at 550 nm. This electrochromic mirror had the following averaged values predicted by the modeling software: L*=39.01, a*=9.39, b*=-10.14, C*=13.82, and Y=10.66.

EXAMPLE 6

[0076] An electrochromic mirror was constructed in the same manner as described above with respect to Example 1 except that a different first surface coating stack was deposited. This first surface stack consisted of a first layer of TiO_2 having a thickness of approximately 1000 Å and a second layer of SiO_2 having a thickness of 200 Å.

[0077] In a high reflectance state, the following averaged values were measured: L*=79.47, a*=-0.34, b*=2.10, C*=2.13, and Y=55.74. In the lowest reflectance state (with a potential of 1.2 V applied), the electrochromic mirror had the following averaged values: L*=36.21, a*=-28.02, b*=-17.94, C*=33.27, and Y=9.12.

[0078] The present invention thus provides a hydrophilic coating that not only is suitable for an electrochromic device, but actually improves the color neutrality of the device.

[0079] To demonstrate the self-cleaning photocatalytic properties of the inventive hydrophilic coatings, four different samples were made and the initial contact angle of a drop of water on the surface of the coating was measured. Subsequently, a thin layer of 75W90 gear oil was applied across the surface of these coatings with the excess oil removed by wiping with a solvent-free cloth. The contact angle of a water drop on the

surface was then measured. The samples were then placed under UV light (1 mW/m^2) for the remainder of the test. The first sample had a single layer of TiO_2 having a thickness of 1200 Å. The second sample had a single layer of TiO_2 at a thickness of 2400 Å. The third sample included a bottom layer of ITO having a thickness of 700 Å, a middle layer of TiO_2 having a thickness of 2400 Å, and a top layer of SiO_2 having a thickness of 100 Å. The fourth sample had a bottom layer of TiO_2 having a thickness of 2400 Å and a top layer of SiO_2 having a thickness of 300 Å. These samples were all produced via sputter deposition on the same day. In sample 3, however, the ITO was pre-deposited. X-ray diffraction analysis showed a crystal structure of the TiO_2 layer as including 74 percent anatase TiO_2 and 26 percent rutile TiO_2. All samples were formed on soda lime glass substrates. The results of the test are illustrated below in Table 1.

TABLE 1

		Days											
	Initial	1	2	3	4	7	8	9	10	11	14	15	17
Sample (Bottom/Middle/Top)		Contact Angle of Water											
1200 Å TiO_2	3	59	60	50	49	55	26	16	18	18	7	6	6
2400 Å TiO_2	3	52	45	38	39	11	10	11	10	10	4	6	6
700 Å ITO / 2400 Å TiO_2 /100 Å SiO_2	2	63	59	39	38	34	23	24	25	21	7	8	9
2400 Å TiO_2 / 300 Å SiO_2	5	62	59	43	38	39	36	41	40	40	30	24	13

[0080] As apparent from Table 1, any top layer of SiO_2 should be kept relatively thin to allow the photocatalytic effect of the underlying TiO_2 layer to be effective. It is also apparent that increasing the thickness of the TiO_2 layer increases the photocatalytic rate.

[0081] Although the examples cited above use a vacuum deposition technique to apply the coating, these coatings can also be applied by conventional sol-gel techniques. In this approach, the glass is coated with a metal alkoxide made from precursors such as tetra isopropyl titanate, tetra ethyl ortho silicate, or the like. These metal alkoxides can be blended or mixed in various proportions and coated onto glass usually from an alcohol solution after being partially hydrolyzed and condensed to increase the molecular weight by forming metal oxygen metal bonds. These coating solutions of metal alkoxides can be applied to glass substrates by a number of means such as dip coating, spin coating, or spray coating. These coatings are then fired to convert the metal alkoxide to a metal oxide typically at temperatures above 450°C. Very uniform and durable thin film can be formed using this method. Since a vacuum process is not involved, these films are relatively inexpensive to produce. Multiple films with different compositions can be built up prior to firing by coating and drying between applications. This approach can be very useful to

produce inexpensive hydrophilic coatings on glass for mirrors, especially convex or aspheric mirrors that are made from bent glass. In order to bend the glass, the glass must be heated to temperatures above 550°C. If the sol-gel coatings are applied to the flat glass substrate before bending (typically on what will be the convex surface of the finished mirror), the coatings will fire to a durable metal oxide during the bending process. Thus, a hydrophilic coating can be applied to bent glass substrates for little additional cost. Since the majority of outside mirrors used in the world today are made from bent glass, this approach has major cost benefits. It should be noted that some or all of the coatings could be applied by this sol-gel process with the remainder of the coating(s) applied by a vacuum process, such as sputtering or E-beam deposition. For example, the first high index layer and low index layer of, for instance, TiO_2 and SiO_2, could be applied by a sol-gel technique and then the top TiO_2 and SiO_2 layer applied by sputtering. This would simplify the requirements of the coating equipment and yield cost savings. It is desirable to prevent migration of ions, such as sodium, from soda lime glass substrates into the photocatalytic layer. The sodium ion migration rate is temperature dependent and occurs more rapidly at high glass bending temperatures. A sol-gel formed silica or doped silica layer, for instance phosphorous doped silica, is effective in reducing sodium migration. This barrier underlayer can be applied using a sol-gel process. This silica layer could be applied first to the base glass or incorporated into the hydrophilic stack between the photocatalytic layer and the glass.

[0082] In general, the present invention is applicable to any electrochromic element including architectural windows and skylights, automobile windows, rearview

mirrors, and sunroofs. With respect to rearview mirrors, the present invention is primarily intended for outside mirrors due to the increased likelihood that they will become foggy or covered with mist. Inside and outside rearview mirrors may be slightly different in configuration. For example, the shape of the front glass element of an inside mirror is generally longer and narrower than outside mirrors. There are also some different performance standards placed on an inside mirror compared with outside mirrors. For example, an inside mirror generally, when fully cleared, should have a reflectance value of about 70 percent to about 85 percent or higher, whereas the outside mirrors often have a reflectance of about 50 percent to about 65 percent. Also, in the United States (as supplied by the automobile manufacturers), the passenger-side mirror typically has a non-planar spherically bent or convex shape, whereas the driver-side mirror 111a and inside mirror 110 presently must be flat. In Europe, the driver-side mirror 111a is commonly flat or aspheric, whereas the passenger-side mirror 111b has a convex shape. In Japan, both outside mirrors have a non-planar convex shape.

[0083] The fact that outside rearview mirrors are often non-planar raises additional limitations on their design. For example, the transparent conductive layer applied to the rear surface of a non-planar front element is typically not made of fluorine-doped tin oxide, which is commonly used in planar mirrors, because the tin oxide coating can complicate the bending process and it is not commercially available on glass thinner than 2.3 mm. Thus, such bent mirrors typically utilize a layer of ITO as the front transparent conductor. ITO, however, is slightly colored and adversely introduces blue coloration into the reflected image as viewed by the driver. The color introduced by an

ITO layer applied to the second surface of the element may be neutralized by utilizing an optical coating on the first surface of the electrochromic element. To illustrate this effect, a glass element coated with a half wave thick ITO layer was constructed as was a glass element coated with a half wave thick ITO layer on one side and the hydrophilic coating described in the above Example 1 on the other side. The ITO-coated glass without the hydrophilic coating had the following properties: L*=37.09, a*=8.52, b*=-21.12, C*=22.82, and a first/second surface spectral reflectance of Y=9.58. By contrast, the ITO-coated glass that included the inventive hydrophilic coating of the above-described example exhibited the following properties: L*=42.02, a*=2.34, b*=-8.12, C*=8.51, and a first/second surface spectral reflectance of Y=12.51. As evidenced by the significantly reduced C* value, the hydrophilic coating serves as a color suppression coating by noticeably improving the coloration of a glass element coated with ITO. Because outside rearview mirrors are often bent and include ITO as a transparent conductor, the ability to improve the color of the front coated element by adding a color suppression coating to the opposite side of the bent glass provides many manufacturing advantages.

[0084] The first transparent electrode 118 coating can also be rendered more color neutral by incorporating thicker layers of first high then low refractive index of the appropriate thicknesses or an underlayer with an intermediate refractive index of the appropriate thickness. For example, half wave and full wave ITO films can be made more color neutral by a one-quarter wave underlayer of intermediate refractive index aluminum oxide (Al_2O_3). Table 2 below lists the measured reflected color values of one-half and full wave ITO films with and without a one-quarter wave thick underlayer of Al_2O_3 on

glass. Both films were applied to the glass substrate by reactive magnetron sputtering.

TABLE 2

	Full wave ITO	Full wave ITO with 1/4 wave Al_2O_3 (894 Å)	1/2 Wave ITO	1/2 Wave ITO with 1/4 wave Al_2O_3 (856 Å)
L*	40.67	41.52	37.25	40.26
a*	16.01	6.68	10.18	1.66
b*	-11.53	-8.36	-6.16	-4.66
Y	11.66	12.2	9.67	11.41

[0085] Other light attenuating devices, such as scattered particle displays (such as those discussed in U.S. Patent Nos. 5,650,872, 5,325,220, 4,131,334, and 4,078,856) or liquid crystal displays (such as those discussed in U.S. Patent Nos. 5,673,150, 4,878,743, 4,813,768, 4,693,558, 4,671,615, and 4,660,937), can also benefit from the application of these principles. In devices where the light attenuating layer is between two pieces of glass or plastic, the same basic constraints and solutions to those constraints will apply. The color and reflectivity of a first surface hydrophilic layer or layer stack can impart substantial color and reflectivity to the device in the darkened state even when this first surface layer stack does not appreciably affect the bright state characteristics. Adjustments to the first surface layer stack similar to those discussed for an electrochromic device will, therefore, affect the color and/or reflectivity of the darkened device advantageously. The same will apply to adjustments made to the second surface of the device or to the color of the darkening layer itself.

[0086] These principles can also be applied to devices such as variable transmittance insulated windows. Fig. 5 shows an example of a variable transmittance window 200. As illustrated, the window includes an inner glass pane or other transparent element 204, an outer glass pane or other transparent element 202, and a window frame

206 that holds glass panes 202 and 204 in parallel spaced-apart relation. A variable transmittance element is positioned between glass panes 202 and 204 and may take the form of an electrochromic mirror with the exception that the reflective layer of the mirror is removed. Thus, the element may include a pair of spaced-apart transparent substrates 112 and 114 joined together by a seal 116 to define a chamber in which an electrochromic medium is dispensed. It will be appreciated by those skilled in the art that the structure of window 200 is shown for purposes of example only and that the frame and relation of the components to one another may vary.

[0087] As shown in Fig. 5, outer pane 202 may have an optical coating disposed on its outer surface. Specifically, this coating may include a first layer 150 having a refractive index intermediate that of glass pane 202 and a second layer 136 made of a photocatalytic material, such as titanium dioxide. A third layer 137 may optionally be disposed over layer 136 and may comprise a photocatalytic material such as titanium dioxide. Preferably, as indicated above, such a layer would be modified to have a lower refractive index than layer 136. The coating may further include an optional hydrophilic layer 138 made of a material such as SiO_2. In general, any of the hydrophilic coatings discussed above may be utilized. It should be noted that color suppression and obtaining a neutral color of the window as a whole may or may not be a design constraint. Specifically, some windows are intentionally tinted a particular color for architectural purposes. In such a case, any color suppression or color adjustment layer(s) may be selected so as to enhance a particular color.

[0088] In optimizing the layer materials and layer thicknesses for optical and

photocatalytic effects, it should be noted that increasing the thickness of the high index functional coating increases the strength of the photocatalytic effect. This is evidenced by a comparison of samples 1 and 2 in Table 1 above. The use of dopants may also increase photocatalytic activity and possibly allow the thickness of the layer to otherwise be decreased while maintaining a particular level of photocatalism. Such dopants may include platinum, group metals copper, nickel, lanthanum, cobalt, and SnO_2. In general, a lower index of refraction for the outermost layer is desirable to reduce the reflectivity of the coating. This can be accomplished by lowering the density of the outermost layer, however, this may decrease the scratch resistance. Also, the TiO_2 layer may be blended with silica, alumina, tin oxide, zinc oxide, zirconia, and praseodymium oxide to lower the index of that layer. In designs such as that described in Example 3, it may be possible to keep the majority of the material having the intermediate refractive index (*i.e.*, the SnO_2 layer) or blending with another material having some photocatalytic activity and thereby increase the photocatalytic activity of the entire stack. For example, SnO_2 may be used alone or in a mixture with another oxide.

[0089] As noted above, the thicker the SiO_2 top layer, the easier it is to attain relatively low C* and Y, but there may be a substantial and undesirable insulative effect with respect to the photocatalism of the stack when the SiO_2 top layer is too thick.

[0090] While the invention has been described in detail herein in accordance with certain preferred embodiments thereof, many modifications and changes therein may be effected by those skilled in the art. Accordingly, it is our intent to be limited only by the scope of the appending claims and not by way of details and instrumentalities describing the embodiments shown herein.

WHAT IS CLAIMED IS:

1. A variable reflectance rearview mirror for a vehicle, comprising:

- a variable reflectance mirror element having a reflectivity that varies in response to an applied potential so as to exhibit at least a high reflectance state and a low reflectance state;

- a self-cleaning, hydrophilic coating applied to a front surface of the mirror element; and

- an acid resistant layer applied to a surface of the self-cleaning, hydrophilic coating.

2. The variable reflectance rearview mirror according to claim 1, wherein the acid resistant layer comprises indium tin oxide.

3. The variable reflectance rearview mirror according to claim 2, wherein the acid resistant layer comprises a ratio of Sn to In of greater than approximately 10:90% by weight.

4. The variable reflectance rearview mirror according to claim 2, wherein the acid resistant layer comprises a ratio of Sn to In of greater than approximately 20:80% by weight.

5. The variable reflectance rearview mirror according to claim 2, wherein the acid resistant layer comprises a ratio of Sn to In of greater than approximately 35:65% by weight.

6. The variable reflectance rearview mirror according to claim 2, wherein the acid resistant layer comprises a ratio of Sn to In of greater than approximately 90:10% by weight.

7. The variable reflectance rearview mirror according to claim 1, wherein the acid resistant layer comprises tin oxide.

8. The variable reflectance rearview mirror according to claim 1, wherein the acid resistant layer comprises tin silicon oxide.

9. The variable reflectance rearview mirror according to claim 1, wherein the acid resistant layer comprises zirconium silicon oxide.

10. The variable reflectance rearview mirror according to claim 1, wherein the mirror exhibits a C* value of less than approximately 20 in the low reflectance state.

11. The variable reflectance rearview mirror according to claim 1, wherein the mirror exhibits a C* value of less than approximately 20 in both the high reflectance state and the low reflectance state.

12. The variable reflectance rearview mirror according to claim 1, wherein the mirror exhibits a C* value of less than approximately 25 in the low reflectance state.

13. The variable reflectance rearview mirror according to claim 1, wherein the mirror exhibits a C* value of less than approximately 25 in both the high reflectance state and the low reflectance state.

14. The variable reflectance rearview mirror according to claim 1, wherein the mirror exhibits a C* value of greater than approximately 20 in one or more of the high reflectance state and the low reflectance state only if b* contributes to at least approximately 50% of the C* value.

15. The variable reflectance rearview mirror according to claim 1, wherein the self-cleaning, hydrophilic coating is sufficiently hydrophilic such that water droplets on a front surface of the self-cleaning, hydrophilic coating exhibit a contact angle of less than about 30 degrees.

16. The variable reflectance rearview mirror according to claim 1, wherein the self-cleaning, hydrophilic coating is sufficiently hydrophilic such that water droplets on a front surface of the self-cleaning, hydrophilic coating exhibit a contact angle of less than about 20 degrees.

17. The variable reflectance rearview mirror according to claim 1, wherein the self-cleaning, hydrophilic coating is sufficiently hydrophilic such that water droplets on a front surface of the self-cleaning, hydrophilic coating exhibit a contact angle of less than about 10 degrees.

18. An electrochromic device, comprising:

- a first substantially transparent element having a front surface and a rear surface, wherein a self-cleaning, hydrophilic coating is applied to at least a portion of the front surface, and further wherein an electrically conductive material is applied to at least a portion of the rear surface;

- a second element having a front surface and a rear surface, wherein an electrically conductive material is applied to at least a portion of the front surface;

- an electrochromic medium contained within a chamber positioned between the first and second elements; and

- an acid resistant layer applied to a surface of the self-cleaning, hydrophilic coating, wherein the acid resistant layer comprises indium tin oxide, and further wherein

the acid resistant layer comprises a ratio of Sn to In of greater than approximately 10:90% by weight.

19. The electrochromic device according to claim 18, wherein the electrochromic medium comprises at least one solvent, an anodic material, and a cathodic material.

20. The electrochromic device according to claim 18, wherein the acid resistant layer comprises a ratio of Sn to In of greater than approximately 20:80% by weight.

21. The electrochromic device according to claim 18, wherein the acid resistant layer comprises a ratio of Sn to In of greater than approximately 35:65% by weight.

22. The electrochromic device according to claim 18, wherein the acid resistant layer comprises a ratio of Sn to In of greater than approximately 90:10% by weight.

23. The electrochromic device according to claim 18, wherein the mirror exhibits a C* value of less than approximately 20 in a low reflectance state.

24. The electrochromic device according to claim 18, wherein the mirror exhibits a C* value of less than approximately 20 in both a high reflectance state and a low reflectance state.

25. The electrochromic device according to claim 18, wherein the mirror exhibits a C* value of less than approximately 25 in a low reflectance state.

26. The electrochromic device according to claim 18, wherein the mirror exhibits a C* value of less than approximately 25 in both a high reflectance state and a low reflectance state.

27. The electrochromic device according to claim 18, wherein the mirror exhibits a C* value of greater than approximately 20 in one or more of a high reflectance state and a low reflectance state only if b* contributes to at least approximately 50% of the C* value.

28. The electrochromic device according to claim 18, wherein the self-cleaning, hydrophilic coating is sufficiently hydrophilic such that water droplets on a front surface of the self-cleaning, hydrophilic coating exhibit a contact angle of less than about 30 degrees.

29. The electrochromic device according to claim 18, wherein the self-cleaning, hydrophilic coating is sufficiently hydrophilic such that water droplets on a front surface of the self-cleaning, hydrophilic coating exhibit a contact angle of less than about 20 degrees.

30. The electrochromic device according to claim 18, wherein the self-cleaning, hydrophilic coating is sufficiently hydrophilic such that water droplets on a front surface of the self-cleaning, hydrophilic coating exhibit a contact angle of less than about 10 degrees.

5

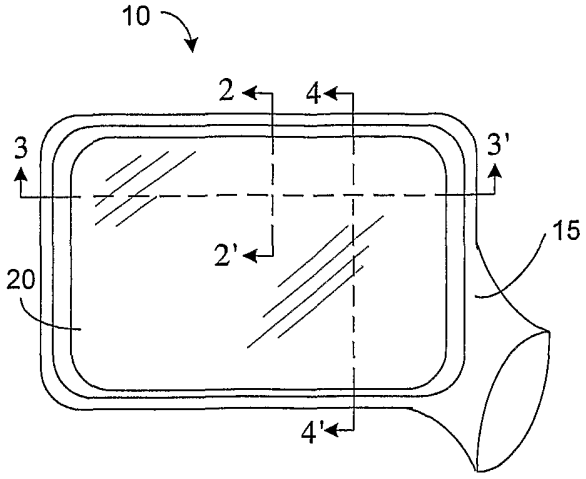
10
2
4
3
3'
2'
15
20
4'

FIG. 1

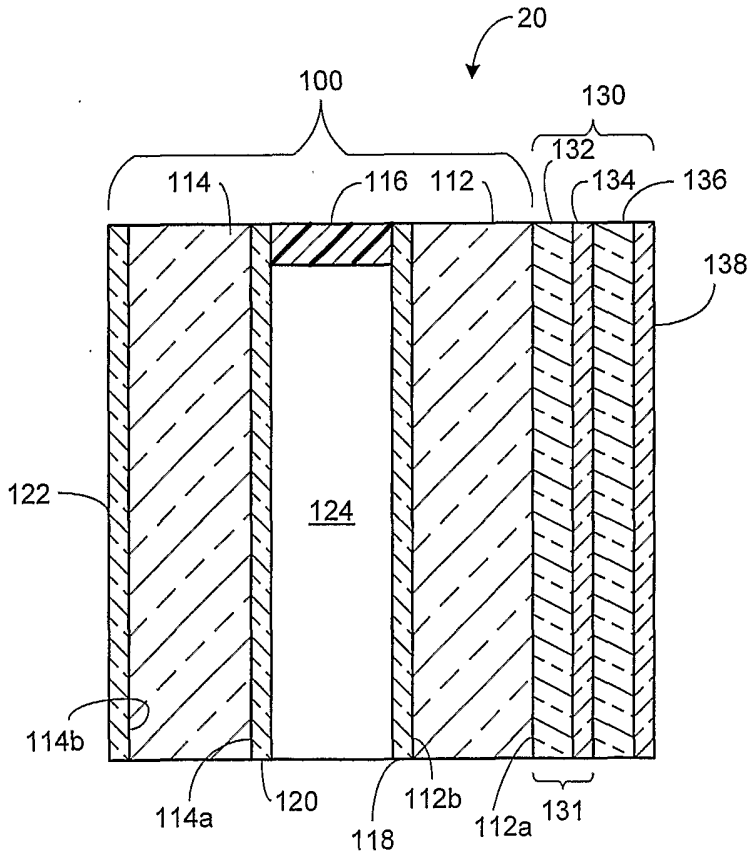
20
100
130
132
114
116
112
134
136
138
122
124
114b
114a
120
118
112b
112a
131

FIG. 2

FIG. 3

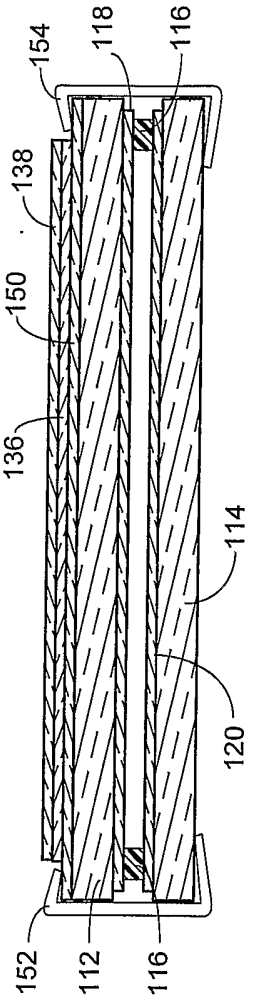
154
118
116
138
150
136
114
120
152
112
116

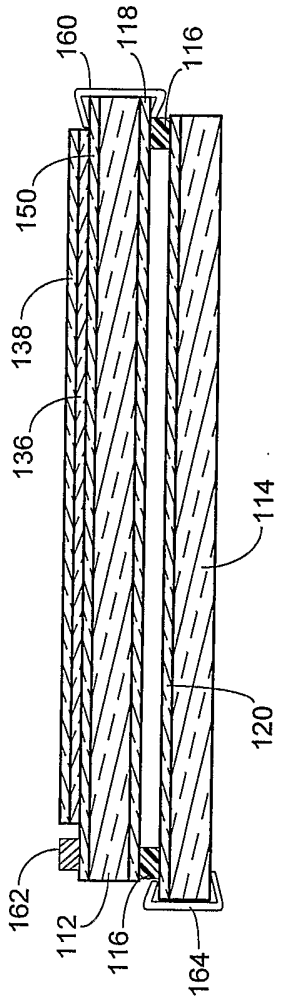
160
118
116
150
138
136
114
120
162
112
116
164

FIG. 4

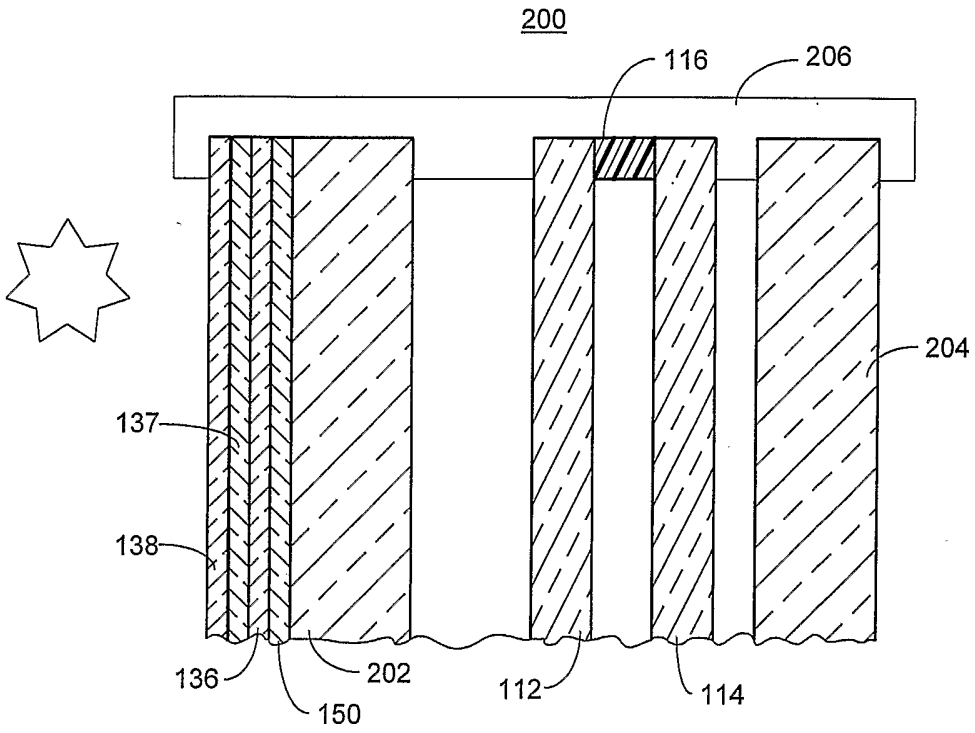

FIG. 5