United States Patent

Kaufman

[15] **3,642,241**

[45] **Feb. 15, 1972**

[54] ADJUSTABLE SUPPORT FOR BOTTLES

[72] Inventor: **Philip Kaufman,** Scarsdale, N.Y.

[73] Assignee: **Instrument Systems Corporation,** West Nyack, N.Y.

[22] Filed: **Nov. 13, 1969**

[21] Appl. No.: **876,352**

[52] **U.S. Cl.** **248/327,** 211/117

[51] **Int. Cl.** **A61b 19/00**

[58] **Field of Search**.....248/318, 320, 321, 322, 327, 248/328, 331, 332, 333, 334, 335, 336, 337, 59; 211/115, 117

[56] **References Cited**

UNITED STATES PATENTS

749,138	1/1904	Andersen	248/335
3,006,481	10/1961	Gussack	211/117

FOREIGN PATENTS OR APPLICATIONS

22,005	1882	Germany	248/327
158,451	4/1957	Sweden	248/408

Primary Examiner—J. Franklin Foss

Attorney—Howard C. Miskin

[57] **ABSTRACT**

In this invention, a track adaptable to be supported by a ceiling mounted rail or hook is positioned in telescoping arrangement with intravenous fluid containing bottle support members, the bottle support members being adjustable for assuming various positions along the track and are normally locked to the track to prevent the bottle support members from being displaced relative to the track by sliding.

10 Claims, 5 Drawing Figures

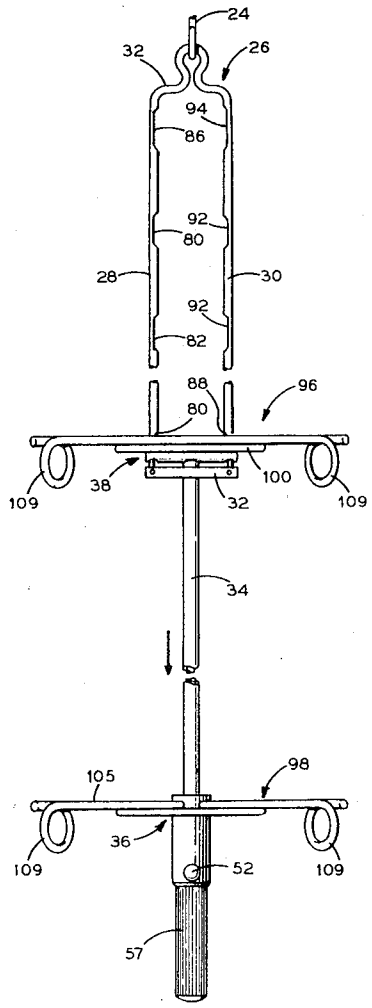

FIG. 1

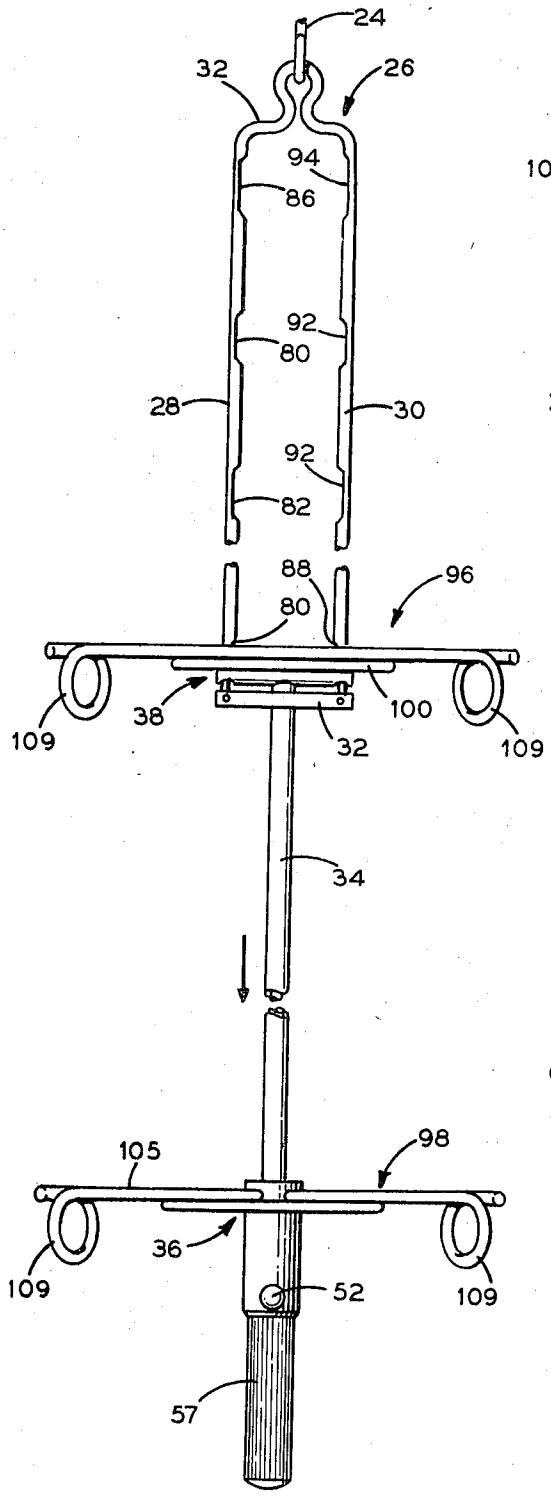

FIG. 3

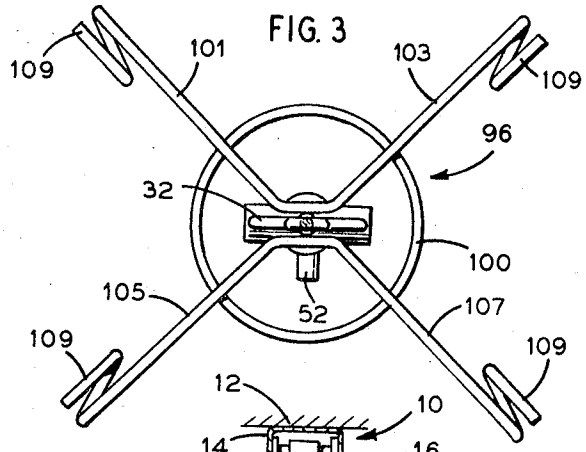

FIG. 2

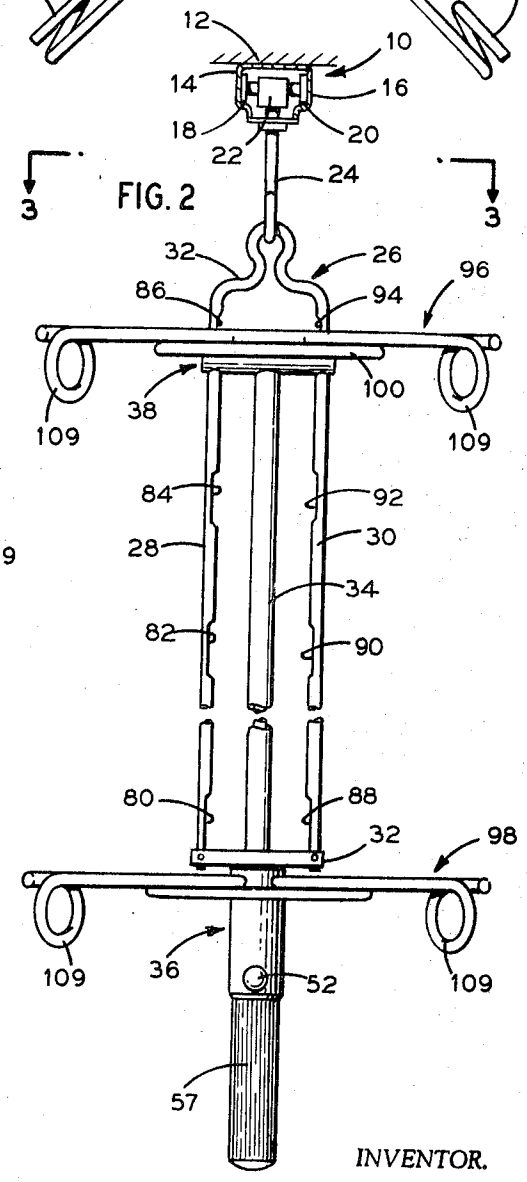

INVENTOR.

Philip Kaufman

BY

Howard C. Miskin

ATTORNEY

FIG. 4

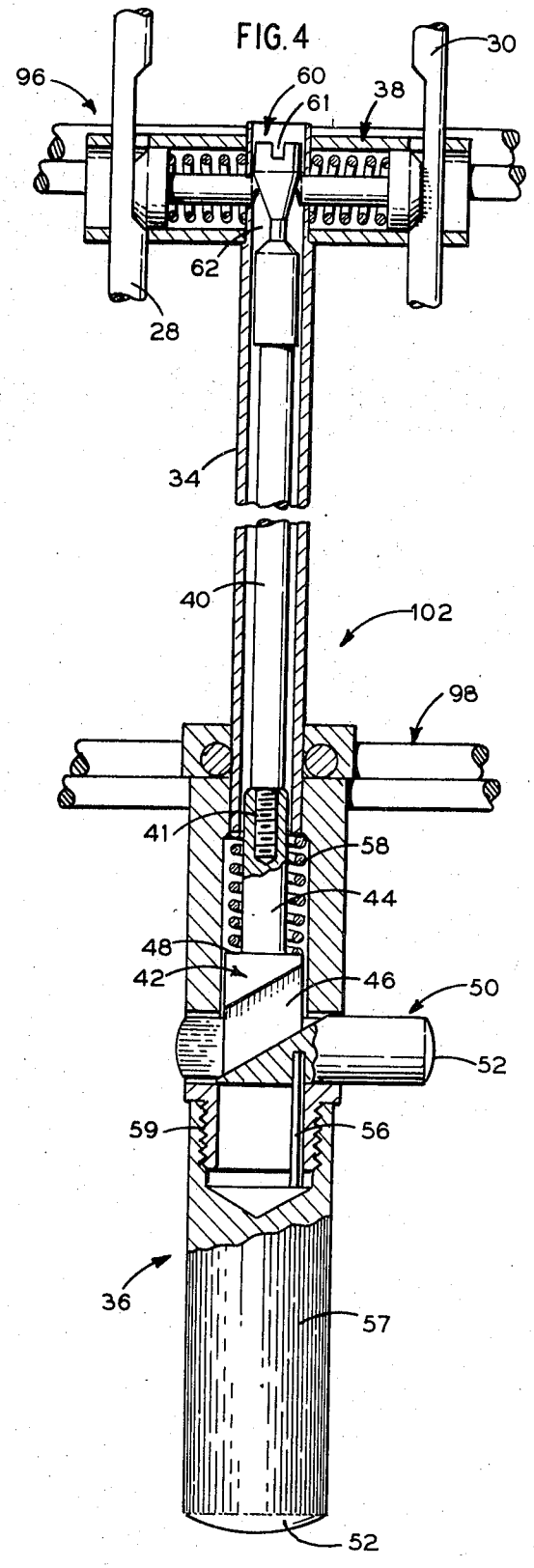
96
60
61
38
30
62
28
34
40
102
98
41
58
44
48
42
46
50
52
59
56
36
57
52

FIG. 5

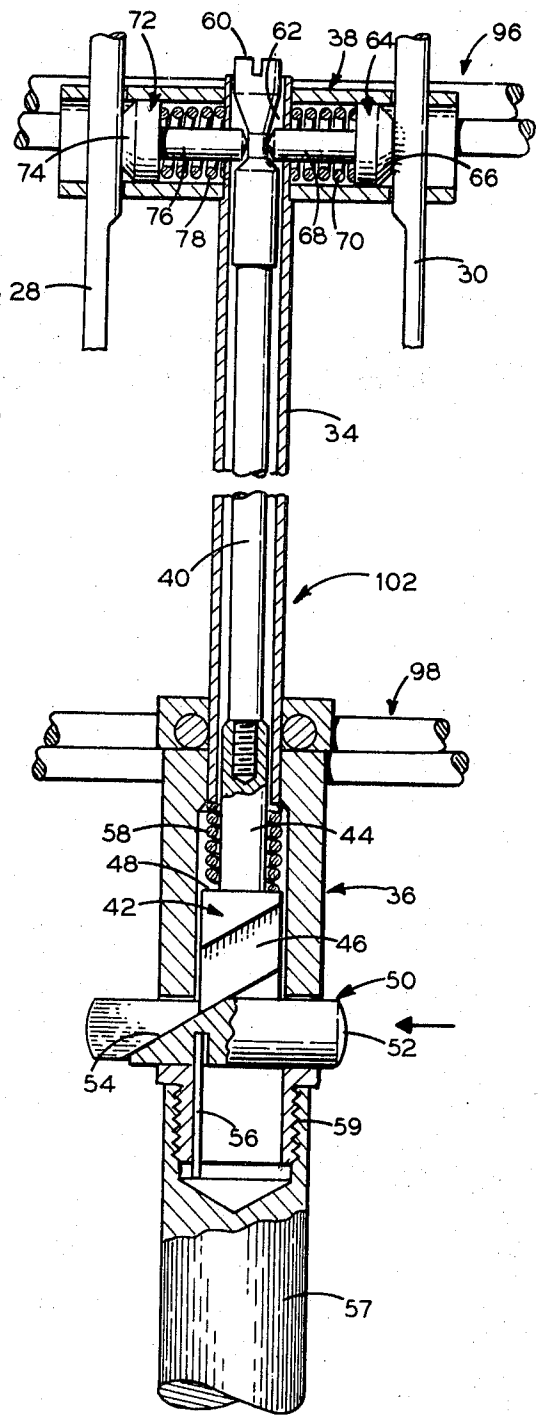
72
60
62
38
64
96
74
66
76
78
68
70
30
28
34
40
102
98
58
44
48
36
42
46
50
52
54
56
59
57

ADJUSTABLE SUPPORT FOR BOTTLES

This invention relates generally to an intravenous fluid support structure and more particularly to an improved intravenous fluid container support structure suitable for use in surgical, intensive care, X-ray, recovery and related rooms.

Frequently, ill persons receiving help in a hospital require intravenous feeding from time to time. Such feedings, which can be in the form of plasma, blood, glucose, sterile water and the like should be fed to the recipient at a fixed controlled rate from a device that is easy to position alongside a patient, is adjustable in height to provide desired hydrostatic flows, is not top heavy nor prone to being thrown over, and does not occupy valuable floor space.

It is an object of this invention to provide an intravenous fluid bottle support structure which can support at any one instant more than one bottle of fluid for intravenous feeding.

It is also an object of this invention to provide an intravenous fluid bottle support structure which is fully adjustable to multiple high or low feeding positions.

It is another object of this invention to provide an intravenous fluid bottle support structure which can be easily adjusted or moved from one vertical position to another, even by nurses or hospital help who are short in height.

It is still another object of this invention to provide an intravenous feeding support structure which is not prone to being thrown over and does not require the use of a floor stand.

It is yet another object of this invention to provide an intravenous fluid bottle support structure which normally assumes a locked vertical position to prevent the repositioning of the support structure through slippage.

It is also another object of this invention to provide an intravenous support structure which is both movable and removable.

It is an additional object of this invention to provide an intravenous fluid bottle support structure which is easy to clean, reliable in operation and economical to build.

These and further objects and advantages of the present invention are achieved, in general, by providing a track rotatably and slidably supported by a ceiling mounted rail or hook and positioned in telescoping arrangement with intravenous fluid containing bottle support members, the bottle support members being adjustable for assuming various positions along the track and normally locked to the track to prevent the bottle support members from being displaced relative to the track by sliding or the like.

The novel features that are considered characteristic of this invention are set forth with particularity in the appended claims.

The invention itself, however, both as to its organization and method of operation, as well as additional objects and advantages thereof, will best be understood from the following description when read in connection with the accompanying drawing, wherein:

FIG. 1 is a view of an intravenous support structure in accordance with the principles of this invention in its fully extended condition;

FIG. 2 is a view of an intravenous support structure in accordance with the principles of this invention in its fully retracted condition;

FIG. 3 is a view along the line 3—3 of FIG. 2;

FIG. 4 is a view, partially in section, of structure in accordance with the principles of the invention in a fully locked condition; and,

FIG. 5 is a view, partially in section, of structure in accordance with the principles of the invention in an unlocked condition and positioned between two locking notch or cutout positions.

Similar reference numerals refer to similar parts throughout the several views of the drawing.

Referring specifically to FIG. 2, a ceiling track **10** having an upper wall member **12** and two sidewall members **14**, **16** is secured to a ceiling by any convenient means, such as screws, bolts or the like, which pass through openings within the upper wall member **12**. Each of the sidewall members are shaped to provide inwardly turned horizontally positioned bottom flanges **18**, **20**.

A carrier **22** having four rollers, two on each side, is positioned within the track, the rollers riding on the horizontally positioned bottom flanges **18**, **20**. A hook **24** rotatably coupled to the carrier **22** extends downward between the bottom flanges **18**, **20**.

The track **10** can assume any desired configuration required to cover a desired area such as U- or L- or J-shaped configurations, so as to permit hook **24** to be positioned along the length and/or width of a bed and, if desired, from one bed to another bed.

Suspended from the ceiling track is a vertically oriented track on which is slidably mounted the bottle holder. An inverted generally U shaped member **26** having two arms **28**, **30** and a base member **32** is suspended from hook **24**, the base member **32** being shaped to provide an eye which is engaged by the hook **24**.

The lower ends of the arms **28**, **30** are secured, by pins, bolts or the like to a stop plate **32** having a centrally positioned cutout through which a support tube **34** is slidably positioned.

The support tube **34** is securely coupled to a handle **36** at its lower end and a latch housing member **38**, such as a tube or the like at its upper end.

Referring specifically to FIG. 4, there is illustrated a view, partially in section, of the structure of the handle **36**, the support tube **34** and the latch housing member **38**. The support tube **34** is secured rigidly to the handle **36** and the latch housing member **38** by means of silver solder, welding, friction or the like.

A shaft **40**, slidably coupled to and positioned within the support tube **34**, is locked securely by means of a threaded coupling **41** to a release member **42** having a cylindrical shaped upper section **44** and wedge shaped lower section **46**. The wedge shaped lower section **46** is larger in cross section than the upper section **44** and forms a shoulder **48**.

The bottom of the lower section **46** of the release member **42** is bifurcated, each bottom surface being wedge shaped.

A button release **50** is slidably supported by a cutout in the handle **36**, and has a smooth, slightly convex end **52** and a wedge shaped section **54**. Wedge shaped section **54** contains a tongue which is accommodated by the centrally positioned cutout of the bifurcated lower section **46**, the angle of the wedge shaped section **54** being substantially equal to the angle of bottom surface of the bifurcated lower section **46**. In the Figures, an angle of approximately 30° is illustrated.

A roll pin **56**, rigidly secured to the button release **50** by friction, extends downward into a clearance cutout of the handle and defines both the longitudinal displacement and rotational displacement about the longitudinal axis of the button release **50**. The tongue of the wedge shaped section **54**, when positioned within the cutout of the bifurcated lower section **46**, restricts the rotational displacement of the release member **42**. An extension member **57** which forms a lower part of the handle and which can have a smooth surface or an etched or knurled surface, is coupled by a screw thread **59** to the lower end of the handle **36**.

A spring **58**, acting in compression is positioned around the cylindrical shaped upper section **44**, its ends abutting against the lower end of the support tube **34** and the shoulder **48** to urge the release member **42** to move downward.

The upper end of the shaft **40** is rigidly coupled, by means of a screw thread, to a lock member **60**. The lock member contains a relieved section **62** formed by two cone-shaped sections positioned end-to-end and separated by a cylindrical section. The top surface of lock member **60** supports a slot **61** for the blade of a screwdriver to tighten the lock member **60** to the shaft **40**.

The latch housing member **38**, which can be a tube, extends outward in opposite directions and at right angles to the shaft **40**. One-half of the latch housing member **38** supports latch **64** having a bifurcated end **66** coupled to a shaft member **68**. The

shaft member 68 is slidably supported by and extends through an opening in support tube 34 to engage the lock member 60. A spring 70 acting in compression is positioned around shaft member 68 and interposed between the support tube 34 and the bifurcated end 66 to urge the bifurcated end 66 outward away from the tube 34 and its engagement with an arm 30.

In a similar manner, the other half of the latch housing member 38 supports a latch 72 having a bifurcated end 74 coupled to a shaft member 76 slidably supported by and extending through an opening in support tube 34 to engage the lock member 60. A spring 78 acting in compression is positioned around the shaft member 76 and interposed between the support tube and the bifurcated end 74 to urge the bifurcated end 74 outward away from the tube 34 and into engagement with arms 28 of the track.

Each end of the latch housing member 38 contains an opening through which is slidably positioned an arm of the inverted U shaped member 26. Arm 30 is slidably coupled through an opening in one arm of the latch housing member 38 to cooperate with the bifurcated end 66; and arm 28 is slidably coupled through an opening in the other arm of the latch housing member 38 to cooperate with the bifurcated end 74.

The bifurcated ends 66, 74 are sized to fit partially around and embrace the arms 28, 30 respectively.

Each arm contains a plurality of aligned notches or cutouts, arm 28 having cutouts 80, 82, 84, 86 aligned respectively with the cutouts 88, 90, 92, 94 in arm 30.

Two arm-ring assemblages 96, 98 are coupled securely by solder or the like to move with the support tube 34 relative to the inverted U shaped member 26. Arm-ring assemblage 96 is coupled securely to the top of the latch housing member 38; and arm-ring assemblage 98 is coupled securely to the top portion of the handle 36. The arm-ring assemblages (see FIG. 3) comprises a ring 100 which is soldered to and provides support and rigidity for four projecting arms 101, 103, 105, 107, each having a loop shaped hook 109 at the end of its outwardly extending end. Bottles of fluid for intravenous feeding are hung from the loop shaped hooks 109.

In operation, the latch housing member 38 is positioned relative to the inverted U shaped member 26 to permit the end 66 of the latch 64 to engage a notch 94, the spring 70 urging the end 66 into engagement with the arm 30. In a similar manner the end 74 of the latch 72 engages a notch 86, the spring 78 urging the end 74 into engagement with the arm 28. In its normal or at rest condition (FIG. 4) spring 58, acting in compression, urges the release member 42 to move downward. Shaft 40 and lock member 60, which are coupled to release member 42, are also driven downward, the upper conical portion of the locking member 60 engaging the ends of the shaft members 68, 76 to prevent the shaft members 68, 76 from moving towards each other along their longitudinal axis and the ends 66, 74 are locked securely within their respective notches of the corresponding arms 30 and 28.

Release member 42, when driven downward by the spring 58, urges the button release 50 to be driven to project out of the handle through the action of the wedge shaped surface of the release member 42 acting upon the wedge shaped surface 54 of the button release. Pin 56 defines the displacement of the button release along its longitudinal axis.

To reposition the invention to a new position, either higher or lower, the user (a nurse, a medical doctor or some other qualified person) grasps the extension member 57 and, with his thumb, pushes on the convex end 52 of the button release 50 and drives it along its longitudinal axis to the left—see FIG. 5.

The wedge shaped surface 54 of the button release 50, acting against the mating wedge shaped surface of the release member 42 forces the release member 42 upward against the action of the spring 58. The upward displacement or movement of the release member 42, acting through the shaft 40, moves the lock member 60 upward to position the cylindrical section 62 opposite the longitudinal axis of the shaft members 68, 76. While holding the button release 50 in, its axial displacement being defined by the pin 56, the user either pulls down or pushes up on the extension member 57, with the same hand. Assuming that the user pulls down, as the downward force is increased the latches 64, 72 are moved inward as the ends 66, 74 move out of their respective notches against the action of the springs 70, 78. As the assemblage or movable member 102 is moved downward along the track, the latches move in and out against the action of their springs as they pass from one notch position to another, camming over the tapered edges of the notches, until the latches 64, 72 are positioned within the particular notches desired, which places the bottle at the desired height. The user then releases his thumb from the button release 50 and the spring 58 acting against the shoulder 48 urges the release member 42 to move downwardly, the wedge shaped lower section 46 acting through the wedge shaped section 54 drives the button release 50 outward to the right, the displacement of the button release 50 being defined by the pin 56. Additionally, the downward movement of the release member 42, acting through the shaft 40, urges the lock member 60 to move downward to contact and restrict the movement of the shaft members 68, 76 along their longitudinal axis and lock the ends 66 and 74 of latches 64, 72 within their corresponding notches on the inverted U shaped member 26.

It is noted that when latch ends 66 and 74 are received within their corresponding notches and button release 50 is released, the latch ends are positively locked into position with respect to arms 28 and 30, thereby preventing accidental downward movement or slippage of rod 34 into a lower position, which could have possible serious effects on the feeding operation from the containers or bottles. The double locking arm provides more stability for the bottles, even if one were used.

Also, while one form of ceiling track was shown, other shapes may be used. The tracks allow the feeding bottles to be readily moved from one location to another.

Positioning the actuating mechanism on the bottom of the handle allows even the shortest nurse to operate the unit with one hand.

What is claimed is:

1. An adjustable support for intravenous feeding equipment comprising a track means adapted for suspension from a ceiling, having a plurality of cutouts, said track means, a member moveable with respect to and slidably coupled to said track means, latch means coupled to said member to engage cutouts positioned along said track means, lock means coupled to hold said latch means in engagement with said cutouts, means coupled to selectively release said lock means from holding said latch means in engagement with said cutouts, and hook means coupled to move with said member slidably coupled to said track means.

2. The combination of claim 1 comprising spring means coupled to drive said latch means into engagement with said track means.

3. The combination of claim 2 comprising handle means coupled to said member to drive said member along said track to move said latch means out of engagement with said cutouts when said means to selectively release said lock means is operated.

4. The combination of claim 3 wherein said handle is positioned below said track means.

5. The combination of claim 4 wherein said means to selectively release said lock means from holding said latch means in engagement with said cutouts comprises a shaft rigidly coupled to said lock means, and release means coupled to drive said shaft along its longitudinal axis.

6. The combination of claim 5 wherein said release means comprises a button slidably coupled to said handle.

7. The combination of claim 6 comprising a wedge shape surface interposed between said button and said shaft.

8. The combination of claim 7 comprising a spring coupled to said shaft to normally urge said lock means to hold said latch means in engagement with said cutouts.

9. The combination of claim 8 wherein said track means comprises an inverted U shaped member, and said member slidably coupled to said track means comprises a tube having a cutout at each end normal to the longitudinal axis of the tube slidably coupled to the arms of the track member, and said latch means being slidably within and movable along the longitudinal axis of said tube.

10. The combination of claim 9 wherein said latch means comprises bifurcated ends in continuous engagement with the arms of said track means.

* * * * *