(No Model.) 3 Sheets—Sheet 1.

G. A. GOODSON.

ATTACHMENT FOR TYPE WRITING MACHINES.

No. 427,680. Patented May 13, 1890.

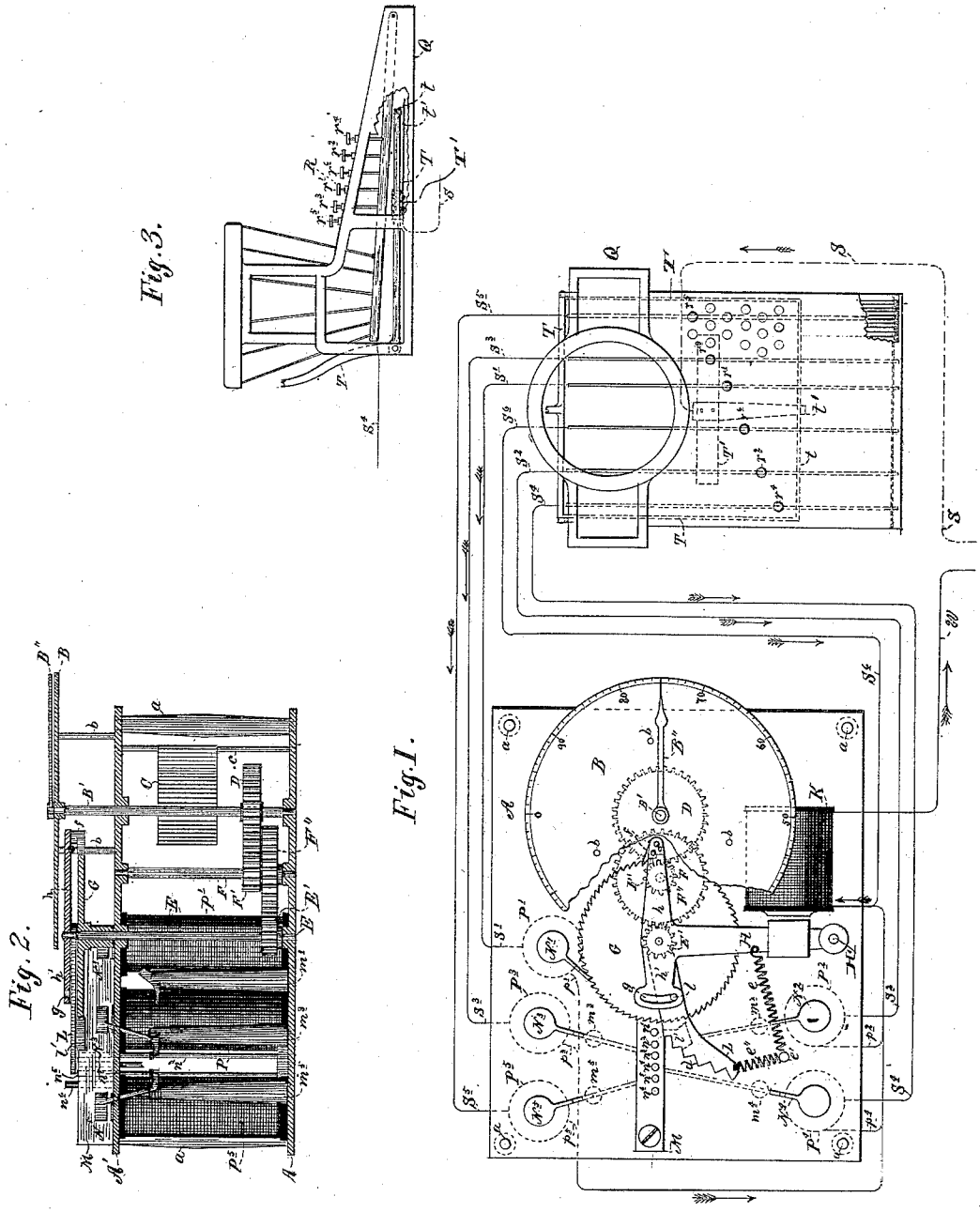

Witnesses
A. H. Opsahl.
Emma F. Elmore.

Inventor
George A. Goodson
By his Attorney
Jas. F. Williamson

(No Model.) 3 Sheets—Sheet 2.

G. A. GOODSON.

ATTACHMENT FOR TYPE WRITING MACHINES.

No. 427,680. Patented May 13, 1890.

Fig. 4

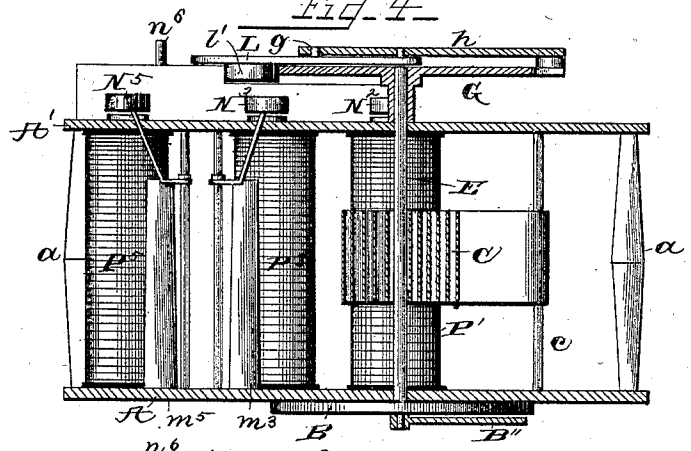

Fig. 5

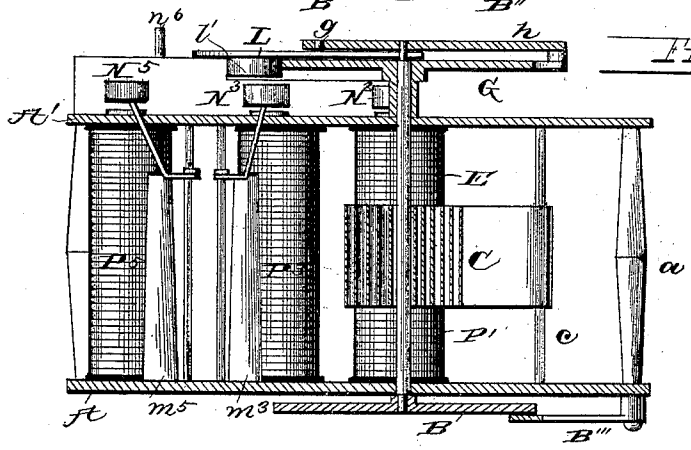

Fig. 6

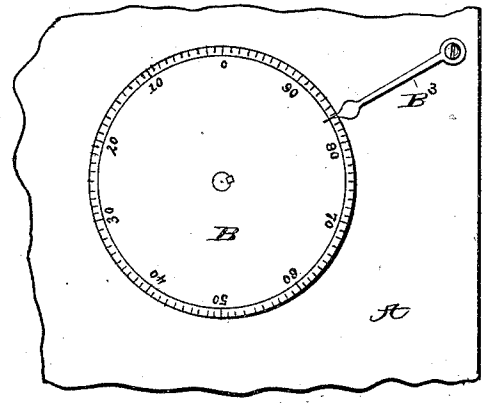

Witnesses

G. A. Tauberschmidt

L. B. Whitaker

Inventor

George A Goodson

By Chas. Attorney

Whitaker & Prevost

(No Model.) 3 Sheets—Sheet 3.

G. A. GOODSON.

ATTACHMENT FOR TYPE WRITING MACHINES.

No. 427,680. Patented May 13, 1890.

Fig. 7.

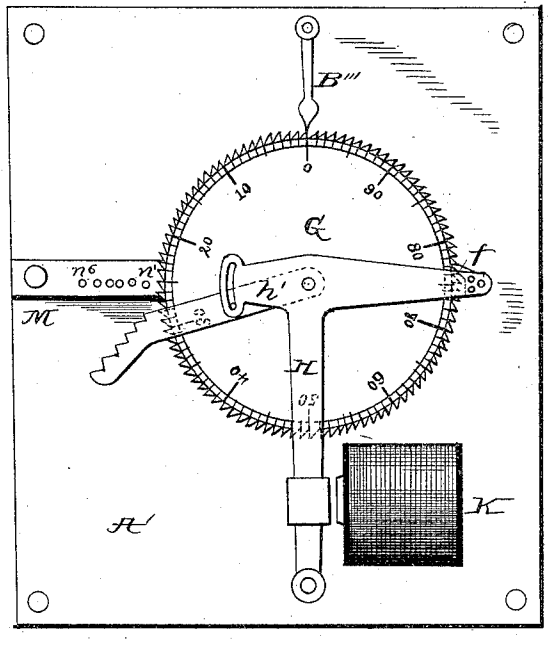

Witnesses

G. A. Faulberschmidt

L. B. Whitaker

Inventor

George A. Goodson

By his Attorneys

Whitaker & Harrock

UNITED STATES PATENT OFFICE.

GEORGE A. GOODSON, OF MINNEAPOLIS, MINNESOTA, ASSIGNOR TO THE MINNEAPOLIS ELECTRO-MATRIX COMPANY, OF SAME PLACE.

ATTACHMENT FOR TYPE-WRITING MACHINES.

SPECIFICATION forming part of Letters Patent No. 427,680, dated May 13, 1890.

Application filed April 24, 1888. Serial No. 271,691. (No model.)

To all whom it may concern:

Be it known that I, GEORGE A. GOODSON, a citizen of Canada, residing at Minneapolis, county of Hennepin, State of Minnesota, have invented certain new and useful Improvements in Attachments for Type-Writing Machines, of which the following is a specification, reference being had to the accompanying drawings.

My invention is designed more particularly for use in connection with matrix-making machines. It has for its object to prepare a copy in such a manner that the lines will justify on the matrix-machine. A common unit is adopted to measure the characters and the printed column. This unit is small enough to measure the smallest character ever used. Every other character is a multiple of this unit. The characters are then classified into groups according to the space required by each. A differential feed is provided, adapted to move the matrix material variable lengths, according to the particular character to be impressed. For the purpose of making the impressions on the matrix material and the stereotype-plate taken therefrom, and consequently the printed matter, come out even at the end of the line, or to have such matter properly justified, it is necessary to provide some system for distributing odd spaces between the words and to measure the copy by the common scale in order to see how many of such spaces it will be necessary to distribute. To this end I run all the copies through a type-writer having like characters to those used on the matrix-machine.

A measuring device is connected to the type-writer, which constantly indicates to the eye of the operator the number of units of space still remaining in the line. As he approaches the end of the line, if the word or syllable next in order requires such a number of units that it will not come out even, or to justify the line, he strikes a number at the end of the line denoting the number of units of space left over and carries forward the word or syllable to the beginning of the next line. The right-hand margin of the copy thus prepared will contain numerals at the ends of the incomplete lines indicating the number of units of space to be distributed back between the words to make the lines justify on the matrix-machine.

In order to be sure that the copy shall be measured by exactly the same scale as the matrix-machine, a registering mechanism is used in connection with the type-writer, which is identical in character, so far as the space movements are concerned, with the mechanism used to feed the matrix material along the line in the matrix-machine. I use electrically-controlled escapement-stops for variably limiting the movement of a pointer-shaft under tension.

In the drawings, like figures referring to like parts throughout, Figure 1 is a plan view of my machine. Fig. 2 is a longitudinal sectional view of the recording mechanism. Fig. 3 is a side elevation of a part of an ordinary caligraph. Figs. 4 and 5 are sectional views of modified constructions. Fig. 6 is a view of the dial of Fig. 5 in plan. Fig. 7 is a view of an escapement-wheel provided with graduations and a stationary pointer.

A suitable frame is formed by a pair of metallic plates A A′, which are connected together and held at a proper distance apart by shouldered posts *a*, located at their opposite corners.

Referring to Figs. 1 and 2, B is a dial supported by posts *b*, attached to the top plate A′. This dial is graduated by the common scale, having the same number of divisions as the printed line has units of space. For example, if the line contains one hundred units the dial will be graduated into one hundred divisions, numbered from 100 to 1, consecutively.

B′ is a pointer-driving shaft journaled in the plates A A′. Its upper end is extended, passing through a central hole in the dial, and is provided with a pointer B″.

C is a motor-spring attached at one end to a fixed support on the post *c* and at the other to the shaft B′, and when wound up tends to move said shaft and pointer in a constant direction.

D is a pinion fixed to the shaft B′.

E is a vertical shaft journaled in the plates A A′, and having its upper end extended above the latter.

E′ is a pinion on the shaft E.

F is a shaft journaled in the plates A A′ between B′ and E, and is provided with a pinion F′, engaging with the pinion D, and also with a pinion F″, engaging with the pinion E′. To the top of the shaft E is secured a ratchet-wheel G.

H is an armature-lever, pivoted at H′ and provided at its free end with arms h h', extending to the vicinity of the periphery of the ratchet-wheel. The arm h extends slightly beyond the periphery of the wheel, and the arm h' stops slightly short of the same. To the under side of the extremity of the arm h is attached a pawl f, adapted to engage with the teeth of the wheel G. The outer end of the arm h' is provided with a slot g.

K is a magnet for actuating the armature-lever H.

e is a retraction-spring attached at one end to the armature-lever and at the other to a fixed resistance, as the post e'.

L is a stop-lever pivoted at its inner end to the armature-lever H and extending beyond the periphery of the ratchet-wheel. It is provided with a projecting lug l, working in the slot g. The outer portion of this lever is curved outward and backward, and is provided on its inner face with a series of shoulders or step-like offsets d. A retraction-spring e'' is attached to the free end of this stop-lever and to the post e'. The stop-lever L is provided on its under side with a fixed pawl l', adapted to be engaged by the teeth of the ratchet-wheel.

In a suitable supporting-bar, as M, fixed to the top plate of the machine are mounted in line a series of five movable stops n' n^2 n^3 n^4 n^5 and one fixed stop n^6, corresponding to the number of groups of characters, the fixed stop being located at the outer limit of the series.

N' N^2 N^3 N^4 N^5 are a corresponding series of armature-levers, pivoted intermediate their extremities to a corresponding series of posts m' m^2, &c., and having one end attached each to its respective movable stop.

P', P^2, P^3, P^4, and P^5 are corresponding series of magnets for operating said armatures.

Q represents the frame of an ordinary caligraph or type-writer.

R represents its bank of keys, corresponding, as before stated, to the character used in the matrix-machine. Six keys r' r^2, &c., are shown, representing one each of the six groups of characters and spaces. Each key-lever is either composed of metal or is provided with a contact-strip on its under side. From these keys or contacts five wires S' S^2 S^3 S^4 S^5 extend one each to the corresponding magnets P' P^2, &c., and a sixth wire S^6 to the magnet K. While but six levers are shown in the drawings, it will be understood that each represents a group, and that all others of said levers for characters requiring a like printing-space are connected with the appropriate wire. These key-levers are each insulated from the others at the forward end of the type-writer.

T is the pivoted lever for releasing the spring-actuated feed-carriage. (Not shown.) The front cross-bar t of this lever lies directly under the key-levers, and is either composed of metal or provided with contact-strips on its top and bottom surfaces connected together.

T′ is a wooden cross-bar fixed to the frame Q. Attached to T′ at one end is a spring contact-strip t', having its free end directly under the cross-bar t. From T′ a wire S extends to a source of electricity.

The return-wires from the magnets P' P^2, &c., (marked, respectively, p' p^2 p^3 p^4 p^5,) all pass to the magnet K, whence a common return-wire W extends to the common source. The contact-strip t' and the magnet K are therefore on a common electrical circuit having five branches, one each from each group of characters, through its corresponding stop-actuating magnet. This circuit is normally open at the key-board, the contacts t and t' being apart.

The operation is as follows: Whenever a particular key is depressed, it is brought into contact with the cross-bar t of the lever T, and on this lever being depressed by the further movement of the key the contacts t t' are brought together and the circuit is closed through the magnet K, and if the character belong to any other than the six-unit group one of the branches is also closed through the corresponding stop-actuating magnet. This circuit may be described as follows: starting from the wire S along the same to strip t', thence to bar t along back to the key-lever depressed and in contact therewith, and thence to its appropriate branch wire S' S^2 S^3 S^4 S^5 S^6 and its connections to return-wire W. The effect of this is to throw up the corresponding movable stop and draw the armature H to the magnet K, unlocking the ratchet-wheel from the pawl f and throwing it into engagement with the pawl l'. The wheel G, being under tension from the motor-spring, will turn and carry with it the stop-lever L until one of its shoulders j comes in contact with the projecting stop. Through the train of gear E′ F″ F′ D the pointer B″ is moved a corresponding distance over the graduated dial. When the contact is broken at the key-board by the separation of t t', which occurs the instant the finger is removed from the key, the springs e and e' draw the armature-lever H and the stop-lever L back to their normal positions. In case a six-unit character-key is depressed, the circuit is closed through K only and the stop-lever L moves to its limit against the dummy or fixed stop n^6. The stop-lever L is therefore allowed to move a variable distance, which corresponds exactly to the space required by the particular character. The dial records the move-

ment. It is most convenient to have the dial-divisions so numbered that the pointer will start from the number denoting the total of the units in the line, (as 100,) and the units remaining will then always be indicated without requiring calculation.

It will be understood that other forms of contacts may be substituted for closing the circuit at the key-board; but the construction shown forms a very convenient connection for the common caligraph.

As a weight is the mechanical equivalent of a spring for actuating mechanism, it is obvious that instead of the motor-spring a weight might be employed.

In Fig. 4 I have shown the gearing intermediate shafts E and B′ dispensed with, the spring connected directly with shaft E, and the dial B placed at one side of the frame and secured to the plate A with the pointer B″ upon shaft E.

In Figs. 5 and 6 the dial-plate B is placed upon the shaft E and a stationary pointer B^3 employed. In these figures the plates A A′ are preferably placed in a vertical position or in such position that the dial can be easily seen.

In Fig. 7 I have shown the escapement-wheel provided with graduations, and a fixed pointer B^3 is made to overhang it and indicate the amount of movement.

In Figs. 4, 5, 6, and 7 the escapement-wheel is given a number of teeth corresponding with the number of spaces shown on the dial B in the other figures of the drawings.

What I claim, and desire to secure by Letters Patent, is—

1. The combination, with a type-writer, of a registering device having a variable feed according to the space required for the different characters in properly-spaced printing, and a separate connection for each group of characters between the type-writer and the registering device, each group comprising all characters of the same size, substantially as described.

2. The combination, with the type-writer having a feed for different characters, of a registering device having an independent variable feed according to the space required for the different characters in properly-spaced printing, and connections between the type-writer and the variable feed of the registering device, whereby copy can be written on the type-writer and the proper spacing for printing registered at the same time, substantially as described.

3. The combination, with a ratchet-wheel under tension and a registering device for recording its movement, of an escapement for locking and releasing said wheel and a series of two or more movable stops for variably limiting the travel of said wheel, a type-writing machine having a separate and independent feed and character board with characters classified into groups according to the units of space required for each in properly-spaced printing, a connection from each character to said escapement, and a different connection from each group of characters to the corresponding stop, substantially as described.

4. The combination, with a ratchet-wheel under tension, a registering device for recording the movement of said wheel, an electrically-controlled escapement for locking and unlocking said wheel, and a series of two or more electrically-controlled stops for variably limiting the travel of said wheel, of a type-writer having a different feed and electric connections from each group of said characters to the electric controlling device for said escapement and the electric controlling device for the corresponding stop, whereby the characters printed on the type-writer will have their appropriate printing-space recorded on the registering device, substantially as described.

5. The combination, with a ratchet-wheel under tension, a registering device for recording its movement, an electrically-controlled escapement for locking and unlocking said wheel, and a series of two or more electrically-controlled stops for variably limiting the movement of said wheel, of a type-writer having a separate and independent feed, having its characters grouped according to the printing-space required by each character, a common electric connection from each of said characters to said electric controlling device for the escapement, and a different electric connection from each of said groups of characters to the electric controlling device for the corresponding stop, substantially as described.

6. The combination, with a ratchet-wheel under tension, a registering device for recording the movements of said wheel, a pivoted armature-escapement for locking and unlocking said wheel, a magnet for actuating said armature, a pivoted stop-lever attached to said armature and moved by said wheel, a series of movable stops for variably limiting the movement of said stop-lever, and a corresponding series of magnets for operating said stops, of a type-writer having a separate and independent feed, and a character-board having characters classified into groups according to the printing-space required by each character, and an electric circuit through said armature-magnet, with branches from the groups of characters to the corresponding stop-magnets, substantially as described.

7. The combination, with a type-writer having pivoted character-keys classified into groups according to the units of space required for each and an independent feed-bar operated by contact with said keys, of a ratchet-wheel under tension, a registering device for recording the movement of said wheel, and an electrically-controlled escapement for locking and unlocking said wheel,

a series of two or more electrically-controlled stops corresponding to the groups of characters for variably limiting the movement of the wheel, contact-strips on said keys and feed-bar, an independent contact fixed to an insulated support on the frame of the machine in position to be struck by said feed-bar when depressed, and an electric circuit normally open through said contacts and escapement, with branches closed through one or the other of the said stop-controlling devices, according to the key depressed.

GEORGE A. GOODSON.

In presence of—

JAS. F. WILLIAMSON,

EMMA F. ELMORE.