United States Patent

[11] 3,590,648

[72] Inventor De Witt Y. Gorman
P.O. Box 26323, Houston, Tex. 77032

[21] Appl. No. 851,305
[22] Filed Aug. 19, 1969
[45] Patented July 6, 1971

[54] **REMOTE LIGHT-SWITCHING APPARATUS**
2 Claims, 5 Drawing Figs.

[52] **U.S. Cl.** **74/103,** 200/172
[51] **Int. Cl.** **F16h 21/44**
[50] **Field of Search** ..... 74/103, 102, 99; 200/172 A

[56] **References Cited**

UNITED STATES PATENTS

2,724,032	11/1955	Coletta	200/172
2,919,333	12/1959	Jones	200/160
3,004,128	10/1961	Mikolajeski	200/172
3,121,778	2/1964	Sanders et al.	200/172
3,175,420	3/1965	Craig	74/544
3,188,439	6/1965	Fullerton	200/172
2,668,456	2/1954	Meistrell	200/172
2,760,035	8/1956	Friesen	200/172
3,339,051	8/1967	De Vall	200/172

Primary Examiner—William F. O'Dea
Assistant Examiner—Wesley S. Ratliff, Jr.
Attorney—Pravel, Wilson & Matthews

ABSTRACT: An extension arm for remotely actuating a light switch wherein the upper end of the extension arm is operably connected to the toggle arm of a light switch by means of a bail slidably mounted in a housing secured to the light switch cover plate for enabling the toggle to be switched from a remote position below the light switch.

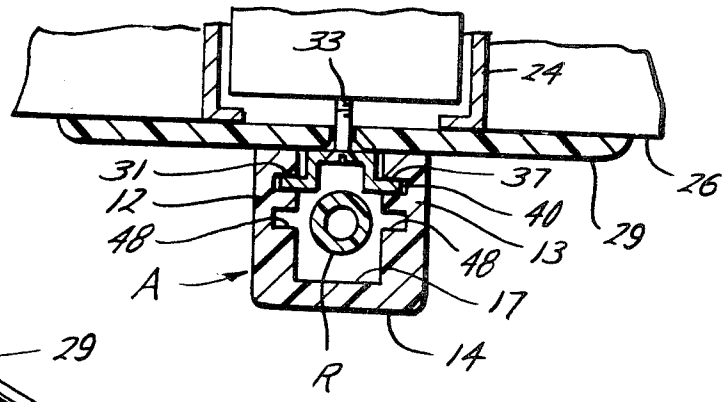

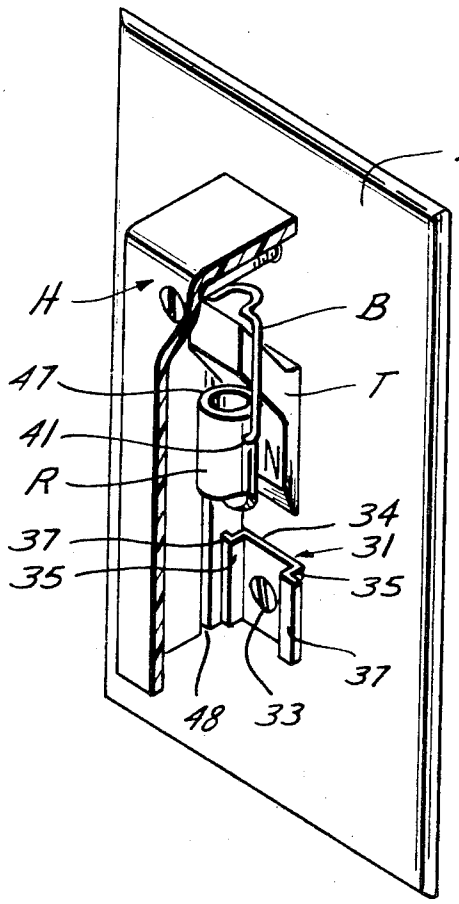

PATENTED JUL-6 1971

3,590,648

Fig. 1

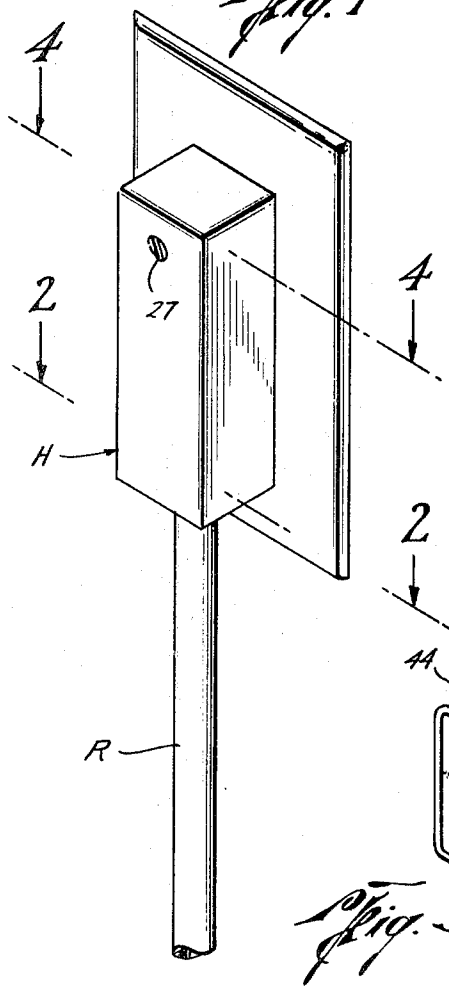

Fig. 2

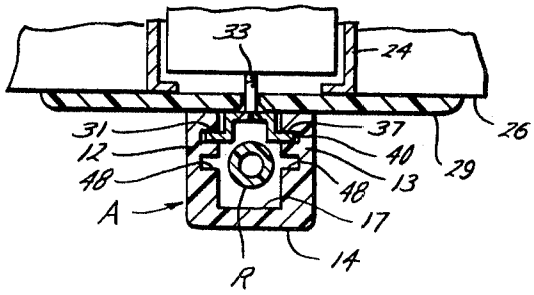

2

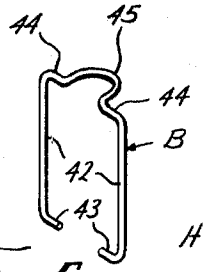

Fig. 5

Fig. 3

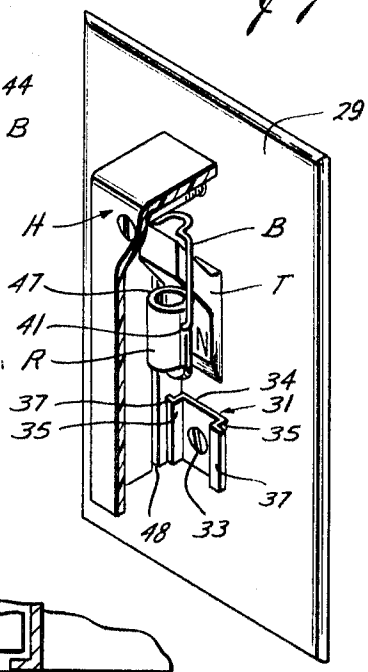

Fig. 4

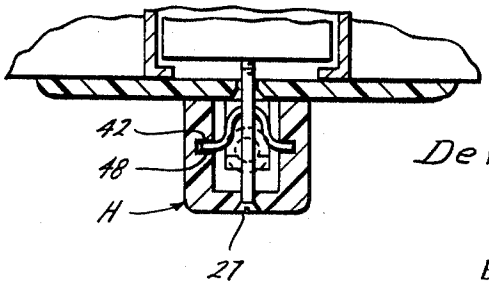

DeWitt Y. Gorman
INVENTOR

BY

Pravel Wilson & Matthews
ATTORNEYS

REMOTE LIGHT-SWITCHING APPARATUS

BACKGROUND OF THE INVENTION

1. Field of the Invention

The present invention relates to a new and improved light switch actuating apparatus for manually switching a light switch toggle to either an "on" or "off" position from a remote location, such as a position beneath a light switch mounted in a wall.

2. Description of the Prior Art

The prior art includes various devices for switching a light switch from a remote location below the switch such as devices of the type disclosed by Devall, U.S. Pat. No. 3,339,051; Coletta, U.S. Pat. No. 2,724,032; Mikolajeski, U.S. Pat. No. 3,004,128; Jones, U.S. Pat. No. 2,919,334; Fullerton, U.S. Pat. No. 3,188,439; Sander, U.S. Pat. No. 3,121,778; Craig, U.S. Pat. No. 3,175,420; and Meistrell, U.S. Pat. No. 2,668,456. These patents disclose devices of varying complexity, all of which are provided for raising and lowering the external toggle end of a pivoted light switch that is normally flush mounted in a wall with the toggle projecting from a switch box cover plate. While these patents disclose various devices for actuating a wall switch from a position directly therebelow, such as by a child or other person unable to reach the elevation of a wall mounted light switch, such prior art devices are relatively complicated and difficult to manufacture and maintain and do not furnish the simplicity of structure and manufacture represented by applicant's remote light switching apparatus.

SUMMARY

The present invention comprises a new and improved light-switching actuating apparatus for remote operation of a light switch which is relatively simple and inexpensive to manufacture and which can be quickly and easily installed or removed from an ordinary light switch cover plate, without requiring any change or modification in the toggle switch or cover plate and without marring or damaging such toggle switch or removing the cover plate from the switch box.

It is also an object of the present invention to provide a new and improved remote actuating device for operating a light switch mounted in a wall and including a wire loop or bail slidably mounted in a housing adapted to be positioned on the toggle switch and a rigid pull rod pivotally connected to said wire bail and depending therefrom for manual operation of the toggle switch from a position immediately therebelow.

Another object of the present invention is to provide a new and improved toggle switch actuator for remote actuation of a light switch mounted in a wall including a rigid actuator rod and means slidably mounted in a housing attached to the light switch cover plate for engaging the toggle switch near its outer end for moving said toggle switch to "off" and "on" positions.

BRIEF DESCRIPTION OF THE DRAWINGS

FIG. 1 is an isometric view showing the apparatus of the present invention mounted on a light switch cover plate with the actuating rod extending therebelow;

FIG. 2 is a vertical sectional view taken on line 2–2 of FIG. 1 showing details of construction of the present invention;

FIG. 3 is an isometric view partially broken away showing the means for connecting the push rod to the toggle switch;

FIG. 4 is a vertical sectional view taken on line 4–4 of FIG. 1 showing the apparatus of the present invention connected to a toggle switch, and

FIG. 5 is an isometric view of the bail for connecting the actuating rod to the light switch toggle.

DESCRIPTION OF THE PREFERRED EMBODIMENT

The apparatus of the present invention designated generally A in the drawings includes a rigid actuating rod R having a wire loop or bail B mounted at its upper end for connecting

such rod R to a toggle switch T. The bail B is slidably mounted in a housing H that guides the bail vertically upwardly and downwardly as the actuating rod R is pushed or pulled, respectively.

As shown, the housing H comprises a longitudinally extending body having longitudinally extending sides **12** and **13** connected by a front **14** with a longitudinally extending slot or opening **17** formed therein for receiving the upper end of the rod R and the toggle switch T.

Such slot is open at the bottom end but is closed at the upper end by the top **18**. Such housing H is secured to the switch box **24** recessed in the wall **26** by means of an upper screw **27** that extends through the face plate **29** and by means of a clip **31** that is secured to the box **24** by means of a screw **33**.

As best seen in FIGS. **2** and **3** of the drawings the clip **31** comprises a U-shaped member having a flat base **34** that is parallel to the cover plate **29** and which has a pair of sides **35** extending outwardly from opposite edges of such base with laterally projecting rims or flanges **37** that are disposed generally parallel to the base **34** and which project laterally outwardly from the upstanding members **35**. Such flanges **37** are adapted to be received in longitudinally extending grooves or slots **40** which are provided in the opposite sides **12** and **13** of the longitudinally extending body H.

The actuating rod R preferably comprises a tubular member formed of plastic or aluminum or other suitable lightweight material. Such rod is provided with a pair of diametrically opposed holes or openings **41** for receiving the ends of the bail B. As best seen in FIGS. **3** and **5** of the drawings the bail B comprises a pair of longitudinally extending parallel side members **42** having the lower ends **43** thereof bent or turned inwardly facing each other. The upper ends of the sides **42** are bent or turned inwardly to provide inwardly extending top portions **44** which are bent laterally to form U-shaped loop **45** which is disposed at generally right angles with respect to the plane in which the parallel side members **42** are disposed. Such loop **45** extends transversly across the top of the toggle switch T and also extends toward the front of the cover plate **29** so as to engage toggle switches of varying shapes and sizes. The side members **42** are disposed on opposite sides of such toggle switch T and extend downwardly therebelow. The upper end **47** of the rod R terminates below the toggle switch T so that such toggle switch is inserted into the bail B above the upper end of the rod R.

The longitudinally extending side members **42** are received in longitudinally extending grooves **48** which are formed in the sides **12** and **13** of the housing H.

In using or operating the apparatus A of the present invention, the bracket or clip **31** is connected to the switch box cover plate **29** by means of the screw **33**. With the lower end portions **43** of the bail B inserted into the openings **41** near the upper end of the rod R, the bail B is inserted into the longitudinally extending slots **48**. With the rod R extending out of the lower end of the housing H, the loop **45** is hung over the upper end of the toggle switch T and the housing H secured on such switch plate **29** by inserting the flange edges **37** of the clip **31** into the grooves **40** and then inserting the upper screw **27** through the upper end of the housing H above the bail B and connecting such screw to the switch in the switch box **24**.

With the rod R extending downwardly below the bottom of the housing H and with the upper end of such rod connected to the toggle switch T by means of the bail B, the light switch or toggle switch T may be moved upwardly or downwardly by alternately pushing or pulling the rod R. It will be appreciated that a downward pull on the rod R when the toggle switch T is in the upward position as shown in FIG. **3** of the drawings will cause the upper loop **45** on the bail B to engage the upper surface of the toggle switch T and pull such toggle switch into a downward position thereby moving the switch to the "off" position. Thereafter should it be desired to reverse the position of the toggle switch T an upward push on the rod R will cause the upper end **47** of such rod to engage the lower sur-

face of the toggle switch upwardly into the position shown in FIG. 3 of the drawing, then turning the switch "on."

The foregoing disclosure and description of the invention are illustrative and explanatory thereof, and various changes in size, shape, and materials as well as in the details of the illustrated construction may be made without departing from the spirit of the invention.

What I claim is:

1. A light switching apparatus for moving a toggle switch from "on" to "off" and vice versa from a remote position below such switch comprising:

a. longitudinally extending housing;

b. means for securing said housing to a toggle switch box adjacent the toggle switch cover plate;

c. a longitudinally extending recess in such housing for receiving the toggle portion of the switch projecting out of the toggle switch cover plate;

d. a bail having an upper end portion extending traversely across the upper side of the toggle for engaging the upper side of the toggle and moving it downwardly when the bail is moved downwardly;

e. a pair of laterally spaced side members depending from the upper end portion of said bail extending downwardly below the toggle;

f. an actuating rod for moving said bail upwardly and downwardly for actuating the toggle, said rod being pivotally connected to the lower end of said bail side members with the upper end of said rod adjacent the lower side of the toggle for moving the toggle upwardly when said rod is moved upwardly; and

g. said housing including a pair of laterally spaced sides connected by a transversally extending front wherein said sides are provided with longitudinally extending grooves for receiving said laterally spaced side members of said bail which are slidably mounted in said longitudinally extending grooves.

2. The apparatus of claim 1 wherein said means for securing said housing adjacent a toggle switch cover plate includes a U-shaped clip having a flat base portion with a pair of upstanding sides extending outwardly from opposite edges of said flat base and laterally projecting rims extending outwardly from the upper edges of said upstanding sides with grooves communicating said longitudinally extending openings in said housing for receiving said rim portions to secure said housing to said U-shaped clip and screw means for securing said U-shaped clip to the switch box.