(12) INTERNATIONAL APPLICATION PUBLISHED UNDER THE PATENT COOPERATION TREATY (PCT)

(19) World Intellectual Property Organization
International Bureau

(43) International Publication Date
30 April 2020 (30.04.2020)

WIPO | PCT

(10) International Publication Number
WO 2020/084627 A1

(51) International Patent Classification:
F16K 31/22 (2006.01) *F02M 37/28* (2019.01)
B01D 36/00 (2006.01)

(21) International Application Number:
PCT/IN2018/050680

(22) International Filing Date:
22 October 2018 (22.10.2018)

(25) Filing Language: English

(26) Publication Language: English

(71) Applicants: **MAHLE ANAND FILTER SYSTEMS PRIVATE LIMITED** [IN/IN]; 38th Milestone, National Highway No. 8, Behrampur Road, Khandsa 122001, Gurgaon (IN). **MAHLE INTERNATIONAL GMBH** [DE/DE]; Pragstraße 26-46, 70376 Stuttgart (DE).

(72) Inventors: **VIR, Dharam**; H.no. 244 Baba Farid Puri, Block No. 26, New Delhi 110008 (IN). **KUMAR, Sajjan**; H.no. 1512, Sector 10a, Gurgaon 122001 (IN). **SHARMA, Kuldeep**; H.no.i-85, Vijay Vihar, Phase 1, Rithala, Delhi 110085 (IN).

(74) Agent: **G S DAVAR** et al.; L S Davar & Co., Globsyn Crystals, Tower 1, 2nd Floor, Block-EP, Plot 11 & 12, Salt Lake, Sector V, Kolkata 700091, West Bengal (IN).

(81) Designated States *(unless otherwise indicated, for every kind of national protection available)*: AE, AG, AL, AM, AO, AT, AU, AZ, BA, BB, BG, BH, BN, BR, BW, BY, BZ, CA, CH, CL, CN, CO, CR, CU, CZ, DE, DJ, DK, DM, DO, DZ, EC, EE, EG, ES, FI, GB, GD, GE, GH, GM, GT, HN, HR, HU, ID, IL, IN, IR, IS, JO, JP, KE, KG, KH, KN, KP, KR, KW, KZ, LA, LC, LK, LR, LS, LU, LY, MA, MD, ME, MG, MK, MN, MW, MX, MY, MZ, NA, NG, NI, NO, NZ, OM, PA, PE, PG, PH, PL, PT, QA, RO, RS, RU, RW, SA, SC, SD, SE, SG, SK, SL, SM, ST, SV, SY, TH, TJ, TM, TN, TR, TT, TZ, UA, UG, US, UZ, VC, VN, ZA, ZM, ZW.

(84) Designated States *(unless otherwise indicated, for every kind of regional protection available)*: ARIPO (BW, GH, GM, KE, LR, LS, MW, MZ, NA, RW, SD, SL, ST, SZ, TZ, UG, ZM, ZW), Eurasian (AM, AZ, BY, KG, KZ, RU, TJ, TM), European (AL, AT, BE, BG, CH, CY, CZ, DE, DK, EE, ES, FI, FR, GB, GR, HR, HU, IE, IS, IT, LT, LU, LV, MC, MK, MT, NL, NO, PL, PT, RO, RS, SE, SI, SK, SM, TR), OAPI (BF, BJ, CF, CG, CI, CM, GA, GN, GQ, GW, KM, ML, MR, NE, SN, TD, TG).

Published:
— *with international search report (Art. 21(3))*

(54) Title: WATER DISCHARGING DEVICE

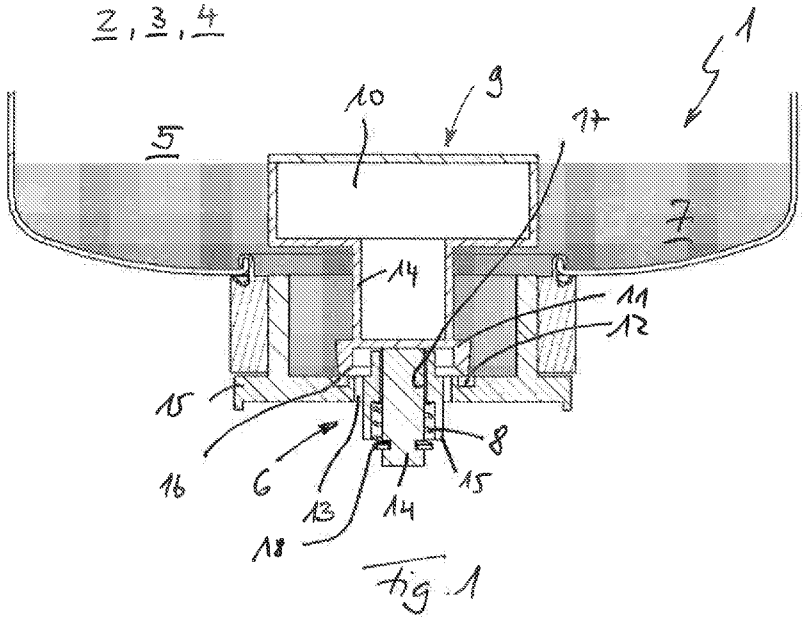

Fig. 1

(57) Abstract: The invention relates to a water discharging device (1), in particular in a fuel tank(2) or a filter device (3), having- a water collection chamber (5),- a valve device (6) for draining water (7) out of the water collection chamber (5).Fundamental to the invention is here that the valve device (6) has a float valve (9)biased into its closed position by means of a spring (8).

WO 2020/084627 A1

WATER DISCHARGING DEVICE

The present invention relates to a water discharging device, in particular in a fuel tank or a filter device, according to the preamble of Claim 1. The invention further relates to a filter device, in particular a diesel fuel filter, having such a water discharging device.

From DE 10 2009 052 301 A1, a water discharging device of the generic type, having a water collection chamber and having a valve device for draining water out of the water collection chamber, is known. The valve device is here disposed in a drain line and is controllable by means of a control device. In addition, at least three water sensors, which are connected in a communicating manner to the control device, are provided. The first water sensor is here disposed above the second water sensor in the region of the water collection chamber, whilst the third water sensor is disposed beneath the first and second water sensor in the region of the drain line. The control device here opens the valve device, insofar as the first water sensor detects water and generates a warning signal, or closes the valve device, insofar as the second and/or the third water sensor no longer detect any water. As a result, in particular the risk of inadvertent contamination of the environment is intended to be reduced.

From DE 10 2013 100 415 A1, a fuel filter apparatus having a return line connecting a lower chamber and a fuel tank is known. A non-return valve is here opened automatically, insofar as a low-pressure pump is operated and the fuel pressure in a housing is higher than the atmospheric pressure.

A further water discharging device is known from US 2016/0296862 A1, as well as from US 2017/0021295 A1.

A drawback with water discharging devices known from the prior art is that their valve devices are often controlled via a control device which requires a comparatively high control complexity and cost expenditure.

The present invention therefore addresses the problem of defining for a water discharging device of the generic type an improved, or at least alternative embodiment, which in particular overcomes the drawbacks known from the prior art.

This problem is solved according to the invention by the subject of independent Claim 1. Advantageous embodiments are the subject of the dependent claims.

The present invention is based on the general notion of, for the first time, equipping a water discharging device for discharging water from a water collection chamber with a valve device which is not controlled by means of an expensive control device of complex design, but which has a float valve which is inexpensive and works automatically and is biased into its closed position by means of a spring. By means of a spring-biased float valve of this type, the risk of an undesirable water discharge or of an undesirable discharge of liquid, such as, for instance, diesel fuel, can likewise be reliably avoided. Moreover, there can hence be created a valve device which makes do without a separate control device and can thereby be realized comparatively cheaply and in simple design.

Via the spring, the float valve is constantly biased into its closed position, so that the valve device only opens once a predefined water level, at which a buoyancy force is greater than a spring force that closes the float valve, has been reached, and closes again once a lower water level has been reached.

In an advantageous refinement of the solution according to the invention, the float valve has a floating body, which is connected to a valve body via an extension. A valve body of this type here cooperates with an annular valve seat disposed on a

housing of the valve device. The floating body can be configured as an inexpensive plastics hollow body, wherein a volume of the hollow body is geared in such a way to the force of the spring that a predefined opening of the valve device and a predefined closing of the same takes place at a likewise predefined water level in the water collection chamber. A floating body of this type can here be of comparatively simple configuration.

In a further advantageous embodiment of the solution according to the invention, the valve body is of pot-shaped configuration and connected to the extension. In addition, the valve device has a housing having an annular valve seat, in which the valve body engages with an annular sealing rim, that is to say a pot rim. A particularly tight-closing valve can hereby be attained.

In a further advantageous embodiment of the solution according to the invention, the spring is supported at one end against the extension and at the other end against the housing and is held, for instance, simply by a locking element, for instance a washer connected to the extension. This washer can be slipped onto the extension. As a result, a fitting of the valve device can be made simple and hence inexpensive.

In a further advantageous embodiment of the solution according to the invention, the housing has a water discharge duct, in which a guide for the extension is disposed. The guide, the valve seat and the housing can here be configured in one piece, in particular as a one-piece plastics injection-moulded part. As a result, the possibility exists of producing these components extremely cheaply.

The present invention is further based on the general notion of equipping a filter device with such a water discharging device, and of thereby significantly reducing a control complexity which has hitherto been necessary for water discharging devices of this type and making the entire filter device less costly.

Further important features and advantages of the invention emerge from the sub-claims, from the drawings and from the associated description of the figures with reference to the drawings.

Self-evidently, the above-stated features and the features which are yet to be set out below are usable not only in the respectively stated combination, but also in other combinations or in isolation without departing from the scope of the present invention.

Preferred illustrative embodiments of the invention are represented in the drawings and are explained in greater detail in the following description, wherein same reference symbols relate to same or similar or functionally identical components.

In the drawings, respectively schematically:

Fig. 1 shows a sectional representation through a water discharging device according to the invention in a filter device according to the invention, with closed valve device,

Fig. 2 shows a representation as in Fig. 1, but with opened valve device.

In accordance with Figures 1 and 2, a water discharging device 1 according to the invention, which can be disposed, for instance, in a fuel tank 2 or in a filter device 3, in particular in a diesel fuel filter 4, has a water collection chamber 5 and a valve device 6 for draining water 7 out of the water collection chamber 5. According to the invention, the valve device 6 now has a float valve 9, which is spring-biased into its closed position by means of a spring 8. As a result, a hitherto necessary control device for controlling, that is to say for opening and closing, the valve device 6 can be wholly dispensed with, since an opening of the valve device 6 is realized in dependence on the water level in the water collection

chamber 5, on the basis of the then floating float valve 9 or the floating body 10 thereof, whilst a closing of the valve device 6 is likewise realized in dependence on the water level in the water collection chamber 5 and aided by means of the spring force provided by the spring 8.

If Figure 1 is considered, then the spring force which is exerted by the spring 8 and which biases the valve device 6 into its closed position is here shown to be greater than the buoyancy force of the floating body 10. In the case of the situation represented according to Figure 2, the buoyancy force of the floating body 10 is greater than the spring force exerted by the spring 8, whereby a valve body 11 of the valve device 6 is lifted off a valve seat 12 and the water 7 is discharged via a water discharge duct 13. The floating body 10 can here be configured as an inexpensive plastics hollow component.

If Figures 1 and 2 are further considered, then it can be seen that the floating body 10 of the float valve 9 is connected via an extension 14, for instance a valve rod, to the valve body 11. The valve body 11 itself is here of pot-shaped configuration and connected to the extension 14, in particular is even constructed in one piece with the latter.

The valve device 6 additionally has a housing 5 having the annular valve seat 12, in which latter the valve body 11 engages with its annular sealing rim 16. The spring 8 is here supported at one end against the extension 14 and at the other end against the housing 15. In the illustrated embodiments, the extension 14 is of two-piece configuration and is configured beneath the valve body 11 as a built-on part, wherein it is also conceivable, of course, that the extension 14 both above and beneath the valve body 11, together with the valve body 11, are configured in one piece.

The housing 15 has the aforementioned water discharge duct 13, in which a guide 17 is provided for the extension 14. The guide 17, the valve seat 12 and the

housing 15 are here preferably configured in one piece, in particular as a one-piece plastics injection-moulded part, and hence can be produced not only in high quality, but, moreover, also at low cost. Also the floating body 10, the extension 14 and the valve body 11 can be produced in one piece, in particular as a one-piece plastics injection-moulded part.

A fitting of the valve device 6 according to the invention is here realized as follows: Firstly, the float valve 9 is placed with its extension 14 through the guide 17 of the housing 15. After this, the spring 8 is mounted from below onto the extension 14 and fixed by means of a locking washer or a locking ring 18. The spring 8 is here supported, on the one hand, against the housing 15 and, on the other hand, against the extension 14 and biases the valve body 11 against the valve seat 12, that is to say the valve device 6 into its closed position.

With the water discharging device 1 according to the invention, a water discharging device 1 which is of simple construction in terms of design and is cheap to produce, and which can be used in all possible filter devices 3, for instance diesel fuel filter devices 4, is able to be provided.

*****

We claim:

1. Water discharging device (1), in particular in a fuel tank (2) or a filter device (3), having
- a water collection chamber (5),
- a valve device (6) for draining water (7) out of the water collection chamber (5), characterized
in that the valve device (6) has a float valve (9) biased into its closed position by means of a spring (8).

2. Water discharging device according to Claim 1,
characterized
in that the float valve (9) has a floating body (10), which is connected to a valve body (11) via an extension (14).

3. Water discharging device according to Claim 2,
characterized
in that the valve body (11) is of pot-shaped configuration and connected to the extension (14).

4. Water discharging device according to Claim 3,
characterized
in that the valve device (6) has a housing (15) having an annular valve seat (12), in which the valve body (11) engages with an annular sealing rim (16).

5. Water discharging device according to Claim 4,
characterized

in that the spring (8) is supported at one end against the extension (14) and at the other end against the housing (15).

6. Water discharging device according to Claim 4 or 5,
characterized
in that the housing (15) has a water discharge duct (13), in which a guide (17) for the extension (14) is disposed.

7. Water discharging device according to Claim 6,
characterized
in that the guide (17), the valve seat (12) and the housing (15) are configured in one piece, in particular as a one-piece plastics injection-moulded part.

8. Filter device (3), in particular a diesel fuel filter (4), having a water discharging device (1) according to one of Claim 1 to 7.

*****

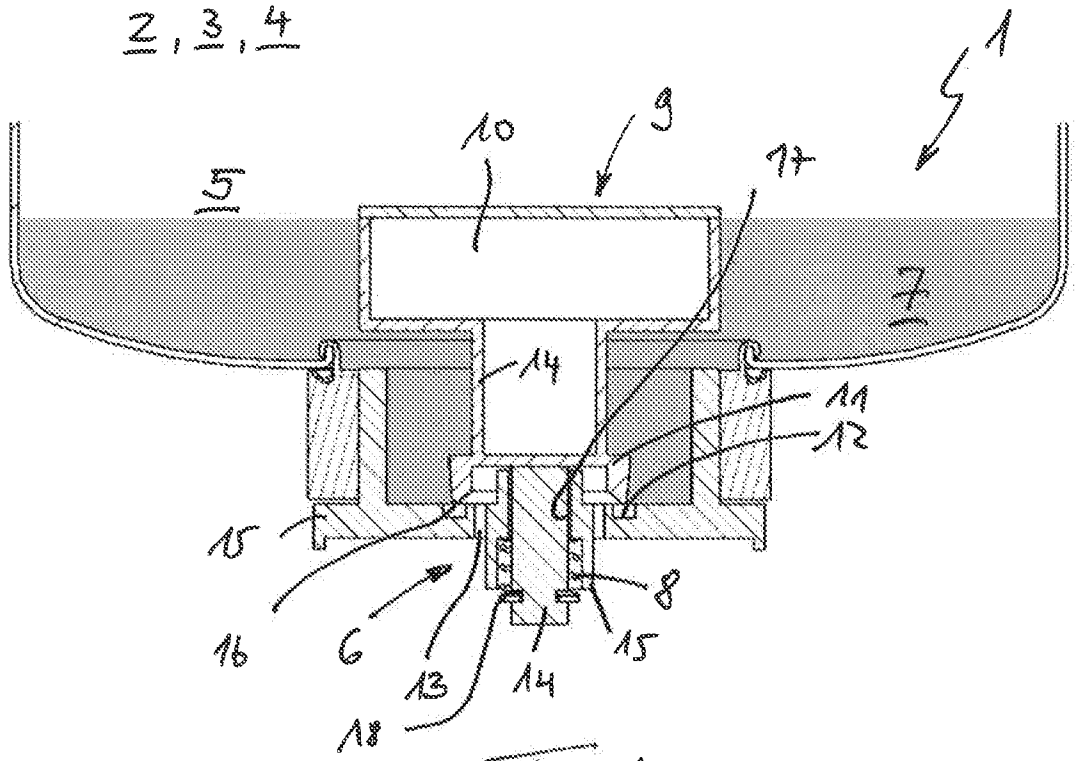
2, 3, 4
1
9
10
17
5
7
14
11
12
15
16
6
13
14
15
8
18

fig. 1

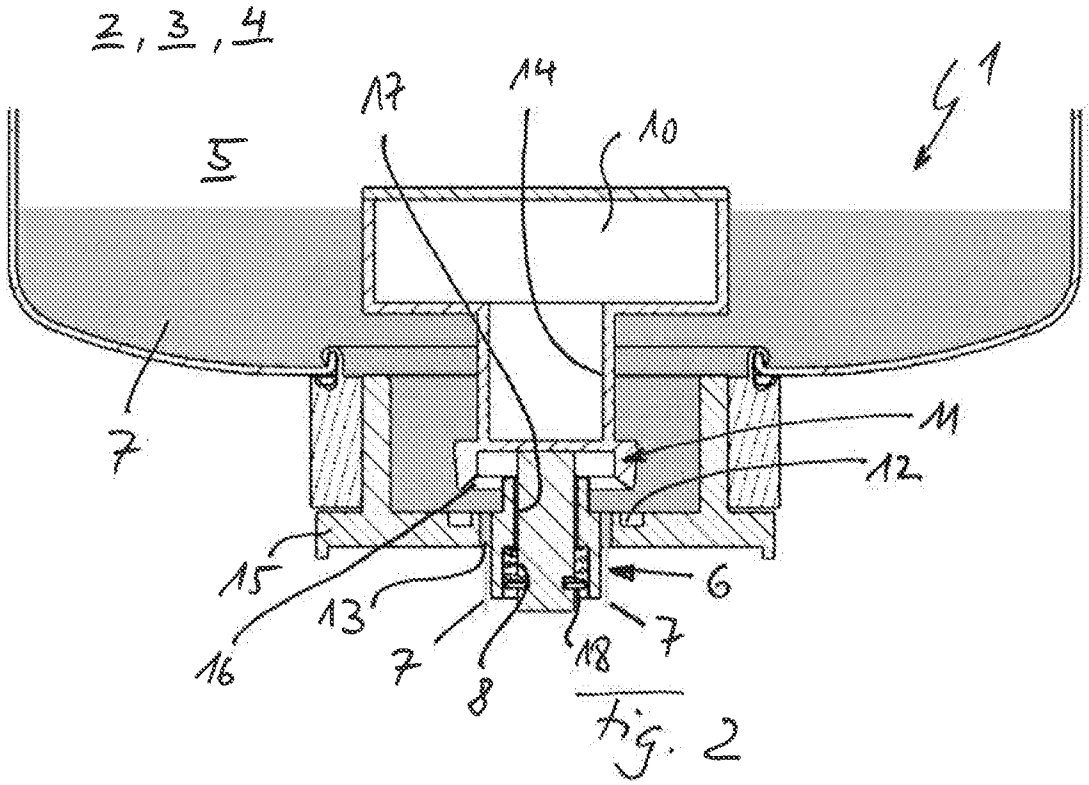
2, 3, 4
1
17
14
10
5
7
11
12
15
16
13
7
8
18
7
6

fig. 2

INTERNATIONAL SEARCH REPORT

International application No
PCT/IN2018/050680

A. CLASSIFICATION OF SUBJECT MATTER
INV. F16K31/22 B01D36/00 F02M37/28
ADD.

According to International Patent Classification (IPC) or to both national classification and IPC

B. FIELDS SEARCHED

Minimum documentation searched (classification system followed by classification symbols)
F16K B01D F02M

Documentation searched other than minimum documentation to the extent that such documents are included in the fields searched

Electronic data base consulted during the international search (name of data base and, where practicable, search terms used)

EPO-Internal, WPI Data

C. DOCUMENTS CONSIDERED TO BE RELEVANT

Category*	Citation of document, with indication, where appropriate, of the relevant passages	Relevant to claim No.
X	US 1 852 246 A (LECARPENTIER GEORGE H) 5 April 1932 (1932-04-05) page 2, line 34 - line 73; figures	1-8
A	JP S60 135659 A (SANSHIN KOGYO KK) 19 July 1985 (1985-07-19) abstract	8
X	GB 2 276 700 A (LACEY STEPHEN WILLIAM [GB]) 5 October 1994 (1994-10-05) page 1, paragraph 4 - page 2, paragraph 2; figure	1-8
E	WO 2019/081693 A1 (MANN & HUMMEL GMBH [DE]) 2 May 2019 (2019-05-02) page 5, last paragraph - page 6, paragraph 1; figures abstract	1,2,8

-/--

[X] Further documents are listed in the continuation of Box C.

[X] See patent family annex.

* Special categories of cited documents :

"A" document defining the general state of the art which is not considered to be of particular relevance

"E" earlier application or patent but published on or after the international filing date

"L" document which may throw doubts on priority claim(s) or which is cited to establish the publication date of another citation or other special reason (as specified)

"O" document referring to an oral disclosure, use, exhibition or other means

"P" document published prior to the international filing date but later than the priority date claimed

"T" later document published after the international filing date or priority date and not in conflict with the application but cited to understand the principle or theory underlying the invention

"X" document of particular relevance; the claimed invention cannot be considered novel or cannot be considered to involve an inventive step when the document is taken alone

"Y" document of particular relevance; the claimed invention cannot be considered to involve an inventive step when the document is combined with one or more other such documents, such combination being obvious to a person skilled in the art

"&" document member of the same patent family

Date of the actual completion of the international search	Date of mailing of the international search report
17 July 2019	24/07/2019

Name and mailing address of the ISA/	Authorized officer
European Patent Office, P.B. 5818 Patentlaan 2 NL - 2280 HV Rijswijk Tel. (+31-70) 340-2040, Fax: (+31-70) 340-3016	Torle, Erik

1

Form PCT/ISA/210 (second sheet) (April 2005)

INTERNATIONAL SEARCH REPORT

International application No
PCT/IN2018/050680

C(Continuation). DOCUMENTS CONSIDERED TO BE RELEVANT

Category*	Citation of document, with indication, where appropriate, of the relevant passages	Relevant to claim No.
A	DE 103 50 781 A1 (BOSCH GMBH ROBERT [DE]) 29 July 2004 (2004-07-29) paragraph [0045]; figure 4 -----	2,8

1

INTERNATIONAL SEARCH REPORT

Information on patent family members

International application No
PCT/IN2018/050680

Patent document cited in search report	Publication date	Patent family member(s)	Publication date
US 1852246 A	05-04-1932	NONE	
JP S60135659 A	19-07-1985	NONE	
GB 2276700 A	05-10-1994	GB 2276700 A	05-10-1994
		WO 9423239 A1	13-10-1994
WO 2019081693 A1	02-05-2019	DE 102017010017 A1	02-05-2019
		WO 2019081693 A1	02-05-2019
DE 10350781 A1	29-07-2004	NONE	