March 8, 1960 I. KAMLUKIN 2,927,571

ENGINE STARTING DEVICE

Filed Feb. 18, 1957 3 Sheets-Sheet 1

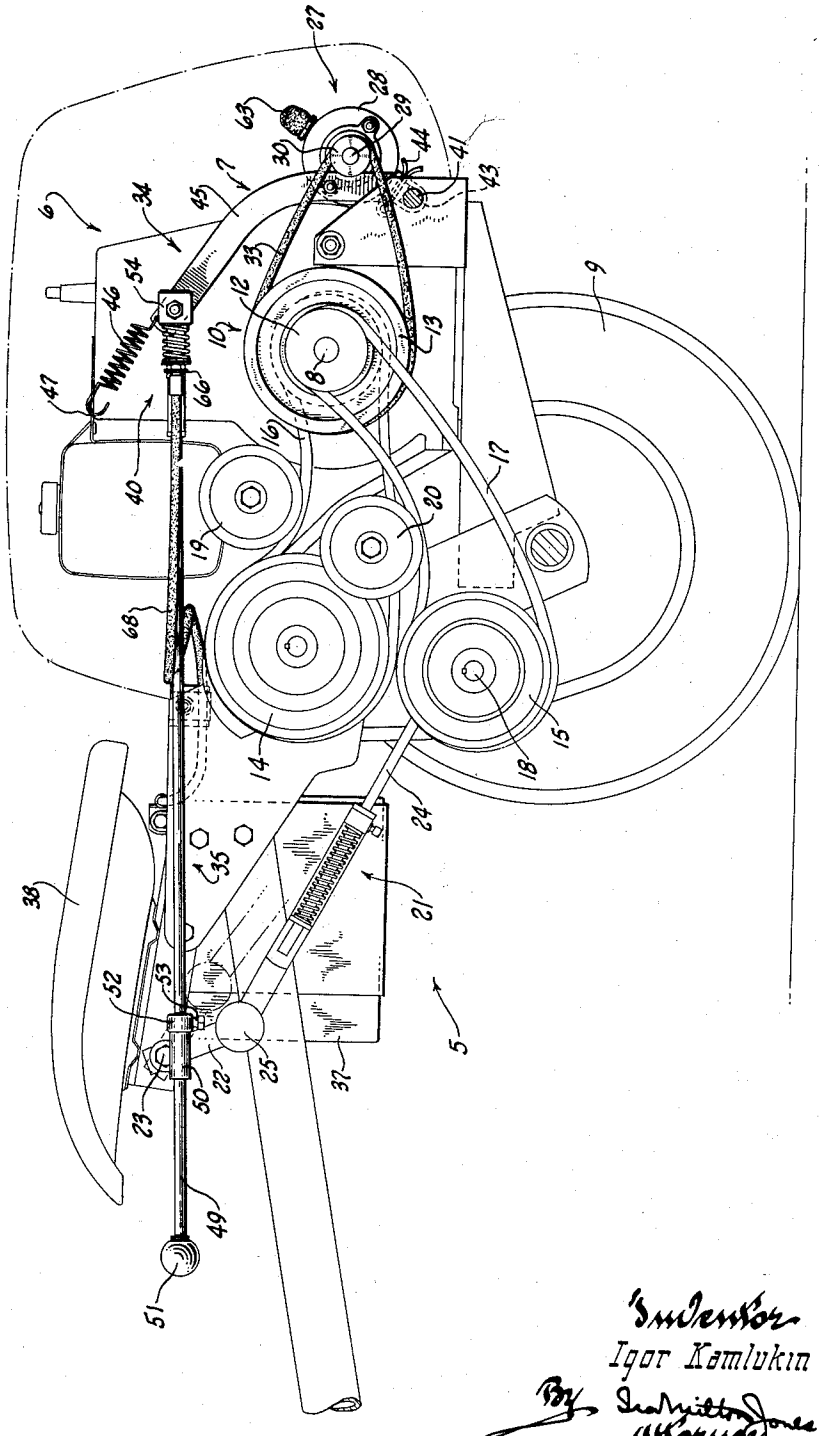

Fig. 1.

Inventor
Igor Kamlukin
By Schmitt & Jones
Attorneys

March 8, 1960 I. KAMLUKIN 2,927,571

ENGINE STARTING DEVICE

Filed Feb. 18, 1957 3 Sheets-Sheet 2

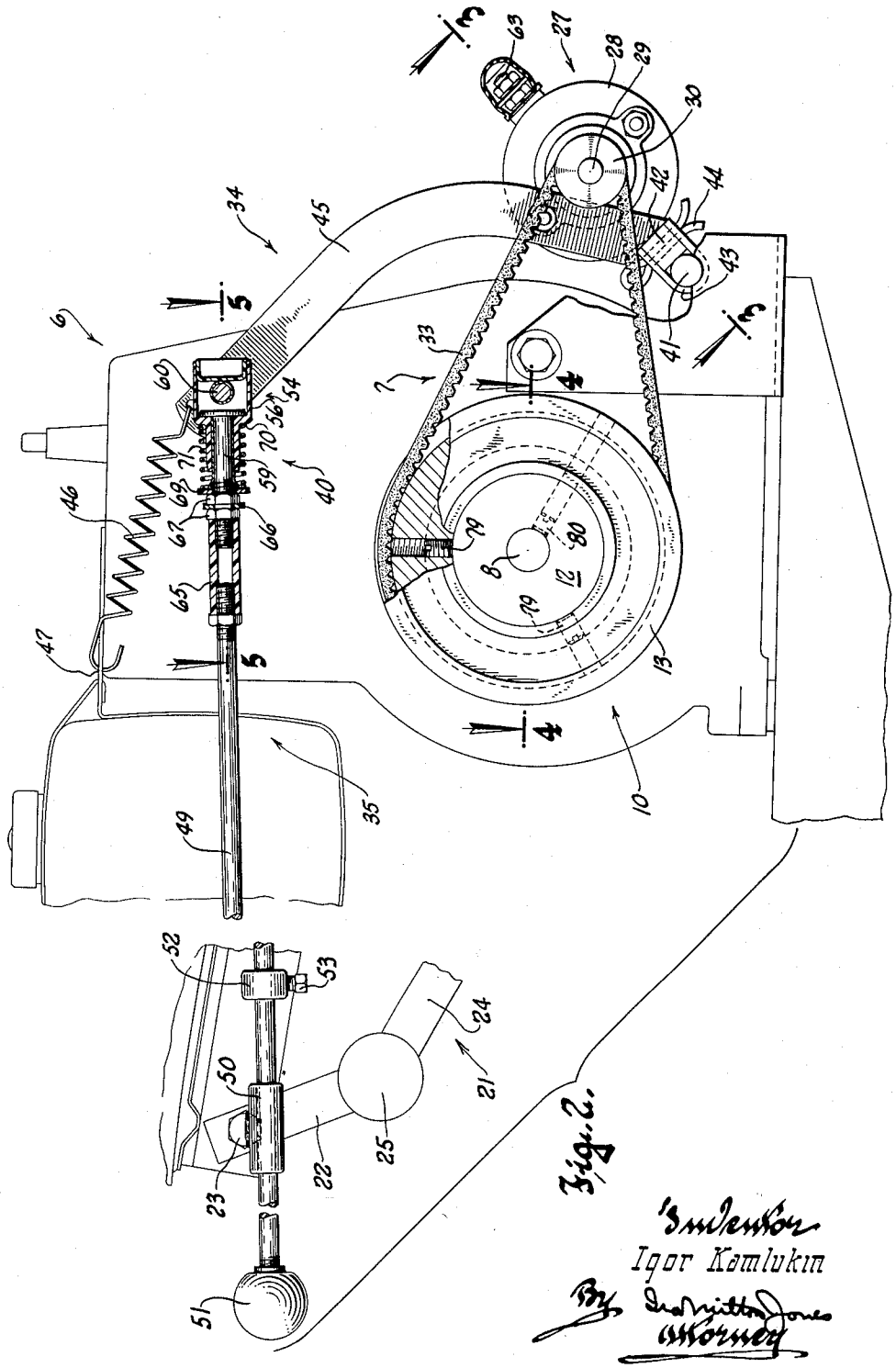

Fig. 2.

Inventor
Igor Kamlukin
By Ira Milton Jones
Attorney

March 8, 1960 I. KAMLUKIN 2,927,571

ENGINE STARTING DEVICE

Filed Feb. 18, 1957 3 Sheets-Sheet 3

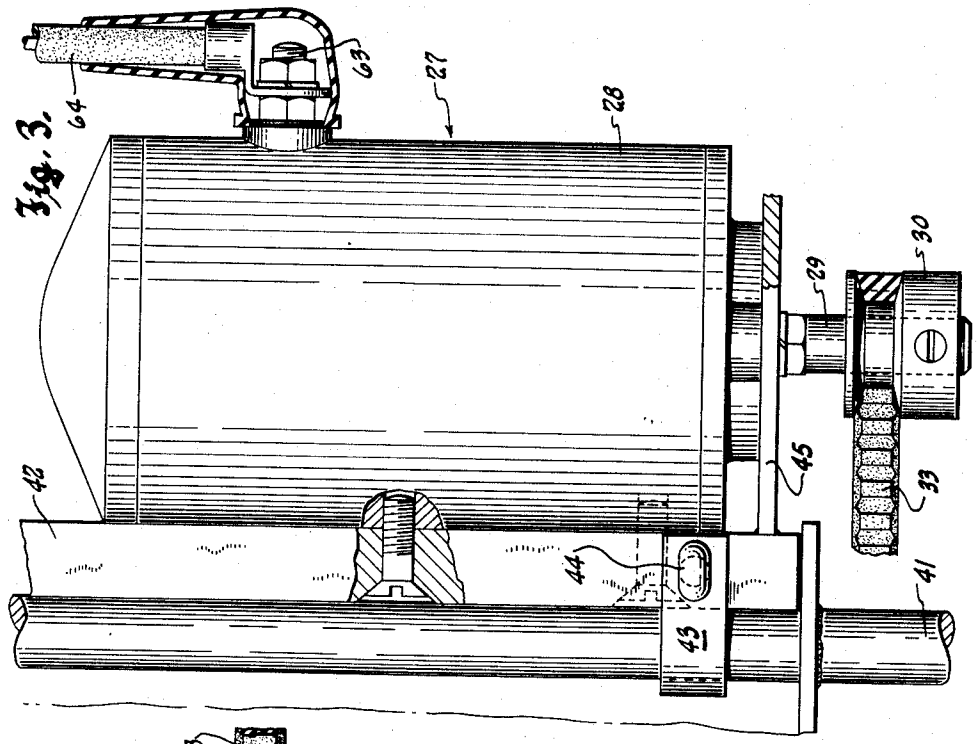

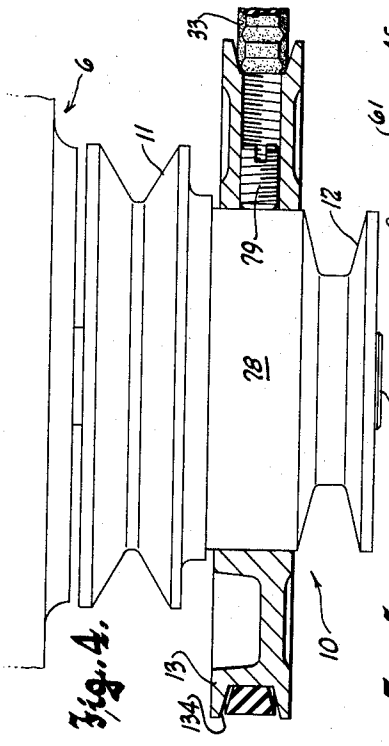

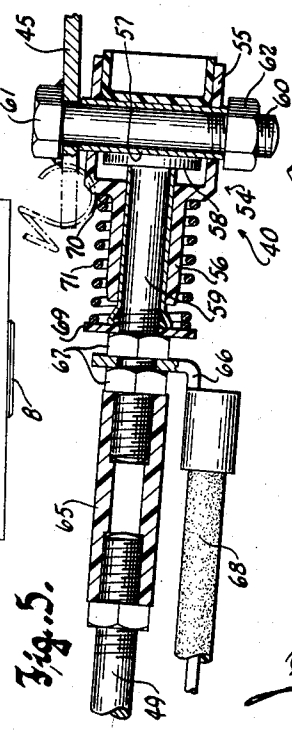

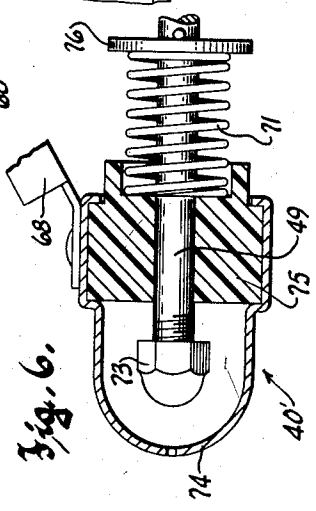

Inventor
Igor Kamlukin
By
Attorney

United States Patent Office 2,927,571 Patented Mar. 8, 1960

2,927,571

ENGINE STARTING DEVICE

Igor Kamlukin, Milwaukee, Wis., assignor to Simplicity Manufacturing Company, Port Washington, Wis., a corporation of Wisconsin

Application February 18, 1957, Serial No. 640,897

2 Claims. (Cl. 123—179)

This invention relates to apparatus of the type powered by small internal combustion engines, such as garden tractors and the like, and refers more particularly to a self-starter for the engines of such apparatus.

It is an object of this invention to provide a simple, inexpensive and efficient self-starter for a small internal combustion engine, such as a single cylinder engine of the type commonly used for powering garden tractors, lawn mowers and similar apparatus.

More particularly, it is an object of this invention to provide a self-starter for an engine of the character described wherein the torque of a starter motor may be transmitted to the crankshaft of an engine to be started by means of a readily disengageable transmission comprising a normally slack belt trained around pulleys on the starter shaft and on the engine crankshaft, and wherein a single manually movable actuator effects tensioning of the belt to constrain said pulleys to rotate in unison and also effects closure of a switch by which the motor is energized from a source of current.

Another specific object of this invention resides in the provision of a self-starter of the character described wherein the belt by which the engine is drivingly connected with the starting motor is tensioned before the motor energizing switch is closed, so that the starting motor will be started under load. It has been found that this procedure produces more satisfactory results, particularly in terms of starting motor life, current draw and efficiency, than the reverse procedure of energizing the starting motor first and then drivingly connecting it to the engine.

Still another object of this invention resides in the provision of very simple and effective means, in apparatus of the character described, wherein a manually operable means governing a disruptible rotation transmitting connection of the internal combustion engine with mechanism to be driven thereby must be disengaged before the starter actuator can be operated. Thus, only the load of the engine is imposed on the starter motor during starting.

A further object of this invention resides in the provision of a starter of the character described featuring a switch instrumentality which must be closed to effect energization of the starting motor and which is yieldingly biased to a normally open position by a spring which also serves to transmit motion from the manually movable starter actuating member to belt tensioning means before yielding to allow the switch to be closed by force exerted manually upon the starter actuating member.

With the above and other objects in view which will appear as the description proceeds, this invention resides in the novel construction, combination and arrangement of parts substantially as hereinafter described and more particularly defined by the appended claims, it being understood that such changes in the precise embodiment of the hereindisclosed invention may be made as come within the scope of the claims.

The accompanying drawings illustrate two examples of

the physical embodiments of the invention constructed according to the best modes so far devised for the practical application of the principles thereof, and in which:

Figure 1 is a partial side elevational view of an apparatus (in this case illustrated as a small riding tractor) powered by an internal combustion engine and including the self-starter of this invention, the starting motor being disengaged from the engine and not energized;

Figure 2 is a view similar to Figure 1, but on a larger scale to better illustrate the starter mechanism of this invention, and showing the starter motor drivingly engaged with the engine but not energized;

Figure 3 is a view taken generally on the plane of the line 3—3 in Figure 2;

Figure 4 shows the crankshaft pulley partly in plan view and partly in section;

Figure 5 is a longitudinal sectional view of the switch mechanism which provides for energization of the electric starting motor; and

Figure 6 is a longitudinal sectional view of a modified form of switch.

Referring now more particularly to the accompanying drawings, in which like numerals designate like parts throughout the several views, the numeral 5 designates generally a riding tractor (its front end portion, including the wheels and steering mechanism, not being shown) powered by a small internal combustion engine 6, and having installed thereon a self-starter device of this invention, designated generally by 7. It will be understood that the self-starter of this invention may be installed on apparatus other than that shown, and that the riding tractor is in this case illustrative. (For a more complete disclosure of the illustrated riding tractor, reference may be made to the copending application of Igor Kamlukin and Nolan Rhoades, Serial No. 614,695, filed October 8, 1956.)

The engine 6 is mounted on the rear of the tractor with the axis of its crankshaft 8 extending across the vehicle, substantially parallel to the axis of the rear driving wheels 9 of the tractor. At its projecting end, the crankshaft has a pulley unit 10 mounted thereon and constrained to rotate therewith. The pulley unit comprises an inner V pulley 11, an outer small diameter V pulley 12, and a larger intermediate pulley 13. Respectively trained around the pulleys 11 and 12 on the crankshaft and around driven pulleys 14 and 15 are V belts 16 and 17. The belt 16, cooperating with the pulleys 11 and 14 provides for the transmission of engine torque to the rear wheels 9 of the tractor, while the belt 17, cooperating with pulleys 12 and 15, provides for the transmission of engine torque to a transverse power takeoff shaft 18 from which an implement (not shown) to be propelled by the tractor may be driven. The transmission mechanism by which the driven pulley 14 is drivingly connected with the rear wheels of the tractor is not shown, this being well known to persons skilled in the art, and being fully disclosed in the aforesaid copending application.

Both of the transmission belts 16 and 17 are normally slack, to permit the engine crankshaft to rotate independently of the pulleys 14 and 15, but these belts may be respectively tensioned by means of movably mounted idler pulleys 19 and 20 to provide driving connections between the engine, the rear wheels 9 of the tractor, and the power takeoff shaft 18. The idler pulleys 19 and 20 may be translated to and from the connection-engaged belt-tensioning positions by means of suitable manual actuators. In this instance an actuator or control member for tensioning the power take off transmission belt 17 is illustrated as a toggle 21. One link 22 of the toggle is pivoted to the tractor frame as at

23 to swing about a fixed transverse axis, while the other link 24 is connected with mechanism (not shown) by which the idler pulley 20 may be translated to and from its belt tensioning position. At the knee of the toggle is a knob 25 by which the toggle links may be swung from their transmission disrupting positions shown in solid lines in Figure 1, toward and beyond alignment with one another to their transmission engaging positions seen in construction lines and at which the toggle holds the idler pulley 20 in its belt tensioning position.

It will be understood that the implement driving power takeoff shaft 18 should be disengaged or disconnected from the engine during starting of the engine, and, as will appear hereinafter, the self-starter apparatus of this invention cooperates with the manual control member or actuator knob 25, to insure that this will be the case.

The starter mechanism 7 comprises, in general, an electric starting motor 27 enclosed in a cylindrical housing 28, and having a drive shaft 29 projecting from one end thereof. A V pulley 30 is secured on the projecting end of the drive shaft 29 to rotate therewith, and a starter belt 33 trained around the pulley 30 and the engine crankshaft pulley 13 provides for the transmission of driving torque from the starting motor to the engine. The belt 33, which is normally slack, may be tightened by a belt tensioning device 34, upon manual operation of a starter actuator 35. A battery 37, conveniently mounted under the seat 38 of the tractor, provides a source of energizing current for the starter motor, and a normally open switch mechanism 40 provides for control of energization of the starter motor from this current source.

More specifically, the starting motor 27 is mounted behind the engine on a cross rod 41, which has its ends fixed to the engine supporting structure in any suitable manner, so that the rod extends substantially parallel to the axis of the engine crankshaft. An elongated mounting bar 42 lengthwise contiguous to the rod 41 is fixed to the housing 28 of the motor by screws or the like to extend lengthwise of the housing, and substantially U-shaped straps or brackets 43 embrace the rod 41 and the mounting bar, being secured to the latter by pins 44, to mount the motor on the rod for bodily swinging motion of the motor in directions to carry the motor shaft 29 and the pulley 30 thereon toward and from the engine crankshaft and thus slacken or tension the starter belt 33.

The center of gravity of the starting motor is disposed rearwardly of the rod 41, that is, at the side thereof remote from the engine, but the motor is normally yieldingly held in a position at which the starter belt 33 is maintained slack by means of the belt tensioning device 34. The belt tensioning device comprises an upwardly projecting tensioning member in the form of a lever 45 having its lower end secured to the mounting bar 42 and to the end of the motor which is adjacent the pulley 30, to swing with the motor, and a coiled tension spring 46, one end of which is secured to the upper free end of the lever and the other end of which is anchored to a fixed part on the tractor, as at 47. The spring 46, of course, counterbalances the weight of the starting motor and holds the same in a position in which the starter belt 33 is slack; but the belt tensioning lever may be swung rearwardly against the bias of the spring 46 to tension the starter belt by means of the starter actuator 35.

The starter actuator comprises a push rod or movable actuator 49 supported for axial sliding back and forth motion, longitudinally of the tractor, partly by a bushing 50 fixed on the tractor frame under the seat, and partly by the upper end of the lever 45. At its front end the push rod has a knob 51 thereon, accessible near the front of the seat 38 and by which the push rod may be readily moved axially rearwardly to effect starting of the engine. A collar 52, adjustably securable in various positions along the length of the push rod by means of a set screw 53, provides an abutment that is engageable with the rear of the bushing to define the forward limit of movement of the rod. When the knob 25 of the manual control member is in its "transmission engaged" position shown in construction lines in Fig. 1, it lies directly to the rear of the collar 52 and the set screw 53 projecting therefrom, and provides another abutment that cooperates with the abutment afforded by the collar 52 to block rearward motion of the starter actuator, and thus prevent inadvertent operation of the starter when the engine power takeoff is drivingly connected with the implement propelled by the tractor. Of course, when the manual control member is in its "transmission disrupting" position, shown in solid lines in Figures 1 and 2, the collar 52 and its set screw clear the knob and the starter actuator may be moved rearwardly to effect starting of the engine.

An important feature of this invention resides in the fact that the switch mechanism 40 forms a part of the means for effecting manual tightening of the belt 33, and provides a lost motion connection between the free end of the lever 45 and the starter actuator rod 49.

As best seen in Figure 5, the switch mechanism 40 comprises a substantially tubular insulating housing 54 having a large diameter rear portion 55 and a coaxial smaller diameter front portion 56. The rear portion 55 houses cooperating relatively movable switch contacts 57 and 58, respectively carried by the lever 45 at its free end, and the rear of the push rod 49. The contact 58 is formed as an enlarged head on a cylindrical stem or plunger 59 which is axially slidable in the smaller diameter front part 56 of the housing to carry the head 58 thereon toward and from circuit making engagement with the contact 57.

The contact 57 may comprise a sleeve of copper or the like extending transversely through the rear part of the housing and rotatably journaled therein. A bolt 60 extends through the contact sleeve and the adjacent free end of the lever 45 to which its head 61 is permanently fixed, as by welding; and a nut 62 on the opposite end of the bolt is provided to enable the contact sleeve 57 to be securely endwise clamped between the nut and the lever, thereby grounding the contact 57 to the tractor frame. One terminal 63 of the starter motor 27 is connected to one of the battery terminals (not shown) by a lead 64, and the other motor terminal (not shown) may be internally connected to the housing 28 and hence is at all times electrically connected with the switch contact 57 through the lever 45.

The stem portion of the other switch contact 59 is threaded and projects forwardly out of the small diameter portion 56 of the housing a substantial distance. At its forward end, this threaded portion of the plunger or stem is screwed into the rear of a tubular insulating connector 65, and the rear end portion of the push rod 49 of the starter actuator is threaded into the front end of this connector. The connector 65 thus rigidly joins the push rod and the plunger 59 of the switch contact 58 so that they comprise in effect a unitary member. Between the rear of the connector 65 and the front of the small diameter portion 56 of the switch housing 54, the plunger 59 carries a terminal 66 secured thereon by being clamped between a pair of nuts 67 threaded onto the plunger. The terminal 66 is connectable with the other battery terminal through a conductor 68.

An insulating washer or flange 69 is fixed on the plunger near the terminal 66, and reacting between this washer and the forwardly facing shoulder 70 defined by the junction between the two housing portions 55 and 56 is a coiled compression spring 71 by which the switch contacts 57 and 58 (and thus the belt tensioning member and the starter actuator) are biased apart. The spring 71 is a relatively strong one, exerting a biasing force greater than that of the tension spring 46 by which the starter

belt is normally maintained in slack condition, and normally holding the contact head 58 against the rearwardly facing bottom of the larger housing portion 55 as seen in Figure 2. Hence, initial rearward movement of the starter actuator push rod 49 is transmitted to the belt tensioning lever 45 through the spring 71 to swing it rearwardly, in unison with the rod 49 and thus effect tightening of the belt 33. Only after the starter belt is fully tensioned to provide a driving connection between the starter motor and the engine will the spring 71 yield to permit relative motion of the switch contact 58 into circuit making engagement with its cooperating contact 57; in other words, the biasing force of spring 71 is sufficiently large so that the starter motor will be drivingly connected with the engine before the latter is energized. It has been found that this sequence of first connecting the starter motor with the engine followed by energization of the starter motor provides smoother and more efficient starting with less current draw than the reverse sequence.

Since one of the switch contacts operates as a unitary member with the push rod 49, the switch may be made, alternatively, as shown at 40' in Figure 6, wherein a nut 73 threaded on the forward end of the push rod 49 comprises the rod carried contact, and a hollow metallic knob 74 enclosing the front end portions of the push rod and the contact 73 thereon provides the cooperating contact of the switch. The battery lead 68, in this case, is connected to the knob 74, and the push rod is directly pivotally connected at its rear with the free end of the lever 45, so that the contact is at all times grounded.

The knob 74 is substantially cup-shaped and is, of course, made of electrically conductive material. An insulating bushing 75 closes the rear of the cup and axially slidably mounts it on the front end portion of the push rod. The contact biasing spring 71 in this case reacts between the bushing 75 and a collar 76 on the push rod, and when the biasing force of the spring is overcome by rearward manual actuation of the cup-like knob 74, after tightening of the belt 33, the conductive end wall of the knob is brought into circuit making engagement with the contact 73 on the front end of the push rod thus closing the starter motor energizing circuit.

Since it is desirable to be able to sell apparatus such as a riding tractor, or a similar device powered by a small engine, with a self-starter as optional equipment, the pulley unit 10 on the engine crankshaft is preferably formed as a composite member, as best seen in Figure 4. As therein shown, the sheave 12 around which the power takeoff belt 17 is trained, and the sheave 11 around which the tractor drive belt 16 is trained, and the sheave 11 around which the tractor drive belt 16 is trained, are integral with one another and axially separated by a hub 78 of a diameter not less than that of the smaller pulley 12. The large diameter pulley or driven starter sheave 13 is secured to the hub 78 by means of set screws 79, and the entire pulley unit is secured to the engine crankshaft by another set screw 80. In addition, it will be noted that the pulley 13 has an oversize groove 134 in its periphery so as to prevent wedging of the V-belt 33 therein when the belt is slackened.

From the foregoing description, taken together with the accompanying drawings, it will be apparent that this invention provides a self-starter for a small internal combustion engine of the type used to power garden tractors and the like, wherein a single manually movable actuator effects tensioning of a belt by which torque of the starting motor is transmitted to the engine and thereafter effects energization of the motor, and wherein the starter actuator cannot be moved to its engine starting position unless the engine is disengaged from the mechanism which it drives.

What I claim as my invention is:

1. In a device having means providing a readily disruptable rotation transmitting connection between the crankshaft of a small internal combustion engine and mechanism to be driven by the engine: an electric starter motor; a normally slack belt for connecting the starter motor with the crankshaft of the engine; a belt tightening member movable to and from a position in which it effects tightening of the belt to drivingly connect the starter motor with the engine crankshaft, said member being biased away from said position; a movable actuator mechanically connected with the belt tightening member and by which the belt tightening member may be manually moved in the belt tightening direction against its bias; a normally open switch device for electrically connecting the motor with a source of current and adapted to be closed by the actuator upon movement thereof to a predetermined position at which the belt is tight; a control member connected with the rotation transmitting means and manually movable to and from a position at which said means provides driving engagement between the engine and mechanism to be driven thereby; and cooperating abutment means on said control member and the actuator, engageable when the control member is in its said position of driving engagement to prevent movement of the actuator in the direction to effect tightening of the belt, and disengageable upon movement of the control member out of said position.

2. The device of claim 1, further characterized by the fact that the actuator has a lost motion connection with the belt tightening member providing for movement of the actuator in the belt tightening direction relative to the belt tightening member after the belt has been tightened; and further characterized by the fact that the switch device is mechanically connected between the belt tightening member and the actuator, to be actuated to a switch closed position in consequence of such relative movement of the actuator in the belt tightening direction.

References Cited in the file of this patent

UNITED STATES PATENTS

1,146,872	Hartford	July 20, 1915
1,226,751	Chryst	May 22, 1917
1,788,713	Good et al.	Jan. 13, 1931
1,841,285	Gilmore	Jan. 12, 1932
1,879,878	Leyvastre	Sept. 27, 1932
1,882,022	Leyvastre	Oct. 11, 1932
2,346,149	Brewer	Apr. 11, 1944
2,522,503	Dodwell	Sept. 19, 1950

FOREIGN PATENTS

1,132,263	France	Oct. 29, 1956