L. R. GRUSS.

AIR SPRING.

APPLICATION FILED FEB. 19, 1916. RENEWED MAY 22, 1918.

1,366,318. Patented Jan. 18, 1921.

Fig. 1.

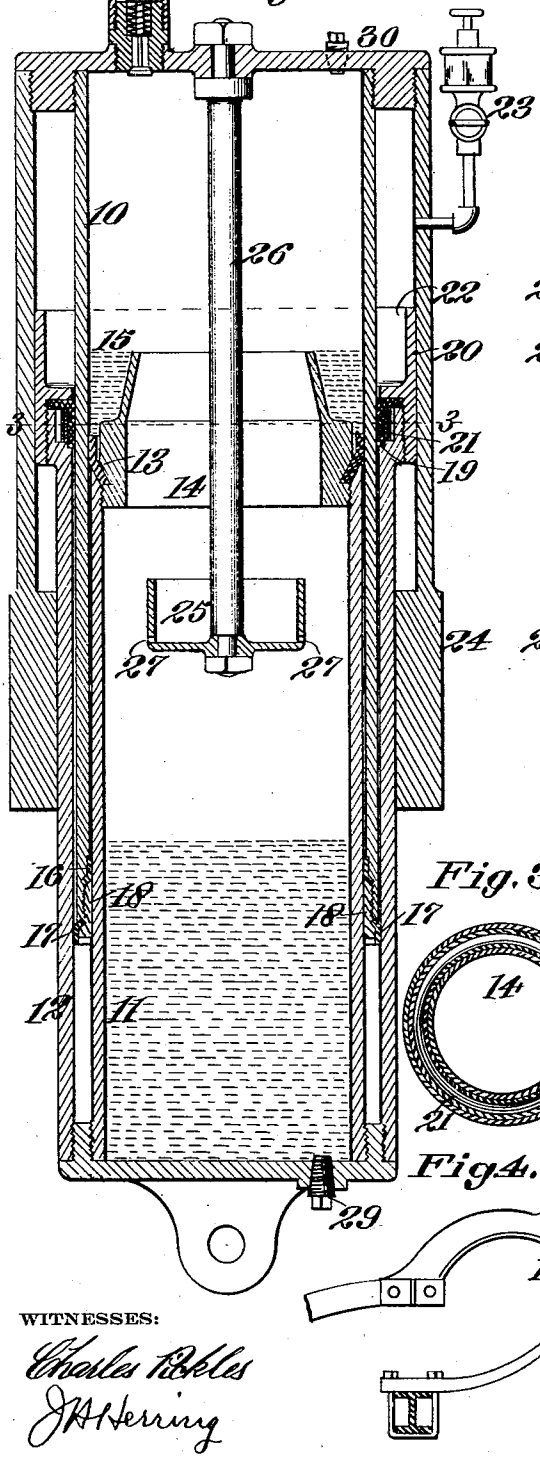

Fig. 2.

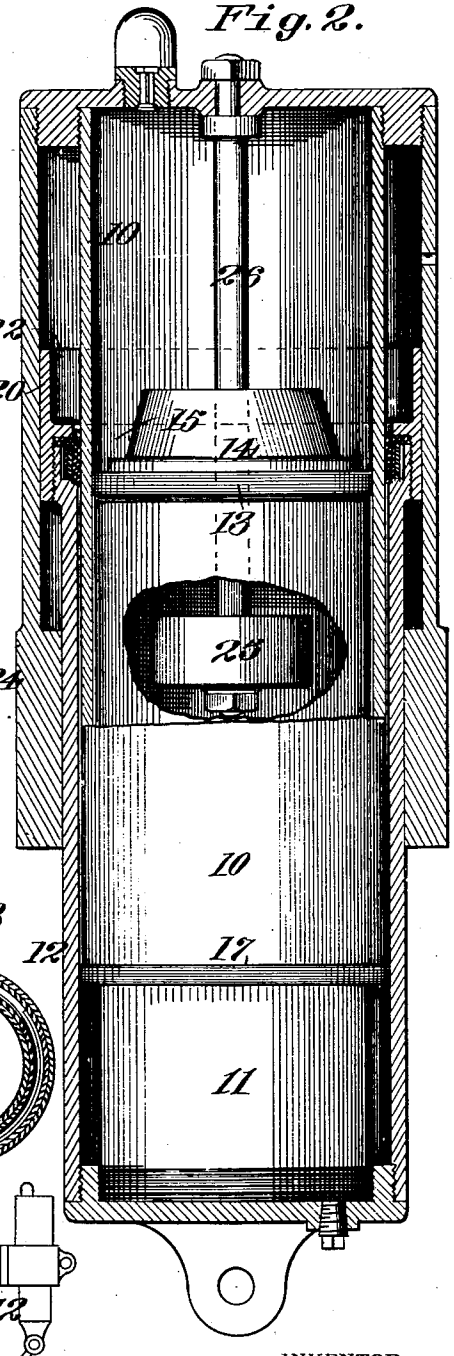

Fig. 3

Fig. 4.

WITNESSES:

Charles Ribles

J. A. Herring

INVENTOR

Lucien R. Gruss.

BY Strong & Townsend

ATTORNEYS

UNITED STATES PATENT OFFICE.

LUCIEN R. GRUSS, OF SAN FRANCISCO, CALIFORNIA, ASSIGNOR TO PNEUMATIC CUSHION COMPANY, OF SAN FRANCISCO, CALIFORNIA, A CORPORATION OF CALIFORNIA.

AIR-SPRING.

1,366,318. Specification of Letters Patent. Patented Jan. 18, 1921.

Application filed February 19, 1916, Serial No. 79,306. Renewed May 22, 1918. Serial No. 236,027.

To all whom it may concern:

Be it known that I, LUCIEN R. GRUSS, a citizen of the United States, residing at the city and county of San Francisco and State of California, have invented new and useful Improvements in Air-Springs, of which the following is a specification.

This invention relates to air springs for vehicles; and has for its object to simplify and improve the construction and operation of such devices.

In carrying out this object, I employ, in combination, a pair of concentrically arranged and spaced lower cylinders, an upper cylinder telescopically and loosely fitted between and forming therewith a chamber for compressible fluid, a packed sliding joint between the end of the lower inner cylinder and the wall of the upper or intermediate cylinder, said packing including an upwardly turned cup leather and an oil seal therefor, packed sliding joints between the end of the intermediate cylinder and each of the adjacent walls of the lower cylinders, each of said joints including inwardly turned cup leathers, a packed sliding joint between the end of the outer cylinder and the wall of the intermediate cylinder and including also an inwardly turned cup leather, an oil seal and an external source of supply for said last mentioned joint, and an internal source of supply for said first mentioned seal, whereby the inwardly turned cup leathers and oil seals prevent loss of internal pressure and the oil escaping on the compression of the device is pumped or scraped back to the inner seal automatically and said inner seal is replenished by a pumping action of the oil from the outer seal.

One form which my invention may assume is exemplified in the following description and illustrated in the accompanying drawings, in which—

Figure 1 shows a vertical, central, sectional view of a device embodying my invention.

Fig. 2 shows a similar view, with the internal parts in elevation.

Fig. 3 shows a plan, sectional view, taken on the line 3—3 of Fig. 1.

Fig. 4 shows a detail of the device applied to a vehicle.

Referring now to the drawings, I have shown an upper cylinder 10, telescopically and loosely fitted between the walls of two concentric lower cylinders 11 and 12 and forming therewith an internal chamber for compressible fluid. The end of the inner cylinder 11 is fitted with an upturned cup leather 13, held thereon by a screw-threaded ring 14 and slidably engaging with the walls of the intermediate cylinder 10. An annular chamber 15 is formed by the ring 14, in connection with the intermediate cylinder walls, and this space is adapted to receive oil for sealing the slidable joint.

The end of the intermediate cylinder is equipped on opposite sides with cup leathers 16 and 17, held in place thereon in sliding engagement with the walls of the adjacent cylinders by means of a screw-threaded ring 18. The cup leather 16, on the inner side, is turned upwardly, while that on the outer side is turned downwardly which presents their flanges in a direction toward the interior chamber or the high pressure side of the joints.

The end of the outer cylinder is fitted with a downwardly turned cup leather 19, held in place thereon by a screw-threaded flanged ring 20 and pressed into sliding engagement with the interior cylinder by an inwardly expanding convolute spring 21. The space 22, formed by the upstanding portion of the flanged ring is adapted to receive oil for sealing the joint, and a drip cup or other external device 23 supplies oil to said seal.

In practice, it is desirable to provide an outer jacket 24 for protecting the device against the entry of dust and the like; and this jacket may also serve to limit the extension movement of the relatively movable parts. A bucket 25 is suspended from the head of the upper cylinder by a rod 26 and a well of oil is normally maintained in the bottom of the lower cylinder at a height to be dipped into by said bucket when the cylinders are compressed, which, on extension movements of the parts, will cause said bucket to discharge its contents into the oil seal 15. For this purpose the said bucket is provided with discharge openings 27 near its bottom.

In operation, the chamber 15 is filled with oil through a plug 30, at the top of the upper cylinder. The chamber 22 is also filled at the beginning of the operation by means of the cup 23. Air is then supplied to the internal chamber, through a valve 28, in an amount sufficient to retain the cylin-

ders in the position shown with the load supported thereon.

Compression of the air, on the movements of the cylinders, in operation, absorbs the shocks and the air is prevented from escaping through the sliding joints by reason of the oil seal 15 and the upturned cup leather 13. Some oil will necessarily escape from the seal 15 into the space between the inner and intermediate cylinder walls, due to the enormous pressure applied. This oil will be carried back on the extension movements of the cylinders by the cup leather 16 scraping or wiping the inner wall of the cylinder. The oil in the outer seal 22 will be sucked into the space between the intermediate and outer cylinder walls, on compression movements, by reason of the lengthening of such space, and on the return stroke this oil is pushed ahead of the cup leather 17 into the bottom of the space between the concentric cylinders. Subsequent compression movement of the cylinders forces such oil ahead of the cup leather 16 and it is carried in the manner already pointed out to the inner seal 15. Thus the cylinder walls are lubricated and a thin film of oil is maintained therebetween which will prevent both the escape and entrance of air and the inner seal is kept replenished as long as the outer drip cup and seal 22 are filled.

As a further precaution against the depletion of the inner seal, I maintain a well of oil in the bottom of the device which is being constantly dipped into by the bucket 25 on compression and carried into juxtaposition with the chamber 15, on extension movements, so as to discharge its contents into the inner seal. In this way the capacity of chamber 15 can be restricted without necessitating a too frequent filling of the device with oil, and as a consequence the apparatus may operate several months without attention, other than to the oil cup 23. Indeed, the spring is more likely to fill up with oil than to run dry, on account of the constant supply of oil being furnished by the drip cup 23 which is ultimately deposited into the inner seal and overflows into the well. Hence I provide a plug 29 in the bottom of the lower cylinders for draining the well.

Changes in the construction and arrangement of the several parts shown and described herein may, obviously, be employed without departing from the spirit of my invention as disclosed in the appended claims.

Having thus described my invention, what I claim and desire to secure by Letters Patent is—

1. An air spring comprising, in combination, lower concentric cylinders, an upper cylinder telescopically fitted between and spaced apart from the walls thereof and forming therewith a chamber for compressible fluid, a packed sliding joint between the inner and intermediate cylinders carrying an oil seal, means forming an oil chamber between the outer and intermediate cylinders, and means carried by said intermediate cylinder for automatically drawing the oil from the outer chamber to the inner seal.

2. An air spring comprising, in combination, lower concentric cylinders spaced apart, an upper cylinder telescopically fitted between and forming therewith a chamber for compressible fluid, packed sliding joints between the end of the inner cylinder and the wall of the intermediate cylinder and between the end of the intermediate cylinder and the wall of the inner cylinder, each of said joints including a cup leather having its free end turned inwardly, and an oil seal for the first mentioned joint.

3. An air spring comprising, in combination, lower concentric cylinders spaced apart, an upper cylinder telescopically fitted between and forming therewith a chamber for compressible fluid, packed sliding joints between the end of the inner cylinder and the wall of the intermediate cylinder and between the end of the intermediate cylinder and the wall of the inner cylinder, and between the end of the intermediate cylinder and wall of the outer cylinder, each of said joints including a cup leather having its free end turned inwardly, and an oil seal for the first mentioned joint.

4. An air spring comprising, in combination, lower concentric cylinders spaced apart, an upper cylinder telescopically fitted between and forming therewith a chamber for compressible fluid, packed sliding joints between the end of the inner cylinder and the wall of the intermediate cylinder and between the end of the intermediate cylinder and the wall of the inner cylinder, each of said joints including a cup leather having its free end turned inwardly, an oil seal for the first mentioned joint, and an oil chamber formed between the end of the outer cylinder and the wall of the intermediate cylinder.

5. An air spring comprising, in combination, lower concentric cylinders spaced apart, an upper cylinder telescopically fitted between and forming therewith a chamber for compressible fluid, packed sliding joints between the end of the inner cylinder and the wall of the intermediate cylinder and between the end of the intermediate cylinder and the wall of the inner cylinder, each of said joints including a cup leather having its free end turned inwardly, an oil seal for the first mentioned joint, an oil chamber formed between the end of the outer cylinder and the wall of the intermediate cylinder, and a downwardly turned cup leather

carried on the end of said outer cylinder at the bottom of said oil chamber and pressed inwardly against the intermediate cylinder.

6. An air spring comprising, in combination, lower concentric cylinders spaced apart, an upper cylinder telescopically fitted between and forming therewith a chamber for compressible fluid, packed sliding joints between the end of the inner cylinder and the wall of the intermediate cylinder and between the end of the intermediate cylinder and the wall of the inner cylinder, each of said joints including a cup leather having its free end turned inwardly, an oil seal for the first mentioned joint, an oil chamber formed between the end of the outer cylinder and the wall of the intermediate cylinder, a downwardly turned cup leather carried on the end of said outer cylinder at the bottom of said oil chamber and pressed inwardly against the intermediate cylinder, and an external source of supply for said oil chamber.

7. An air spring comprising, in combination, lower concentric cylinders spaced apart, an upper cylinder telescopically and loosely fitted between the walls of said lower cylinders and forming therewith a chamber for compressible fluid, a packed sliding joint between the inner and intermediate cylinders, an annular chamber overlying said joint and forming an oil seal therefor, and a bucket suspended from the upper cylinder and movable within said annular chamber and adapted to be dipped into a well of oil contained in the bottom of the lower cylinder upon compression movements of the device for receiving oil and to discharge its contents into said annular chamber upon extension movements of the device.

8. In an air spring, the combination of upper and lower telescoping cylinders, a packed sliding joint between them, an oil chamber for the joint carried by the lower cylinder, the space within the cylinders being in open communication above and below such sliding joint, the lower cylinder forming a reservoir to contain oil, and means carried by the upper cylinder for automatically replenishing the oil chamber for the sliding joint from said reservoir.

9. In an air spring, the combination of upper and lower telescoping cylinders, a packed sliding joint between them, an oil reservoir for the joint, the space within the cylinders being in open communication above and below such sliding joint, the lower cylinder forming a reservoir to contain oil, means carried by the upper cylinder for automatically replenishing the oil seal for the sliding joint from said reservoir, said last-named means including a bucket carried by the upper cylinder and movable from a point below the sliding joint to a point above the sliding joint on the telescopic action of the cylinders.

10. An air spring comprising an upper and a lower telescoping cylinder, a packing member carried by the lower cylinder engageable with the inner wall of the upper cylinder, a bushing member adapted to be secured on the upper end of the lower cylinder to secure the packing member in place, an annular upwardly projecting flange on said bushing to form an annular sealing chamber above the packing member, a liquid sealing medium carried by the lower cylinder and means for automatically delivering a portion of said liquid sealing medium to the annular chamber.

11. An air spring comprising an upper and a lower telescoping cylinder, a packing member carried by the lower cylinder engageable with the inner wall of the upper cylinder, a bushing member adapted to be secured on the upper end of the lower cylinder to secure the packing member in place, an annular upwardly projecting flange on said bushing to form an annular sealing chamber above the packing member, a liquid sealing medium carried by the lower cylinder, and means carried by the upper cylinder for elevating a portion of the liquid sealing medium carried upon the lower cylinder to the annular sealing chamber formed above the packing to maintain a liquid seal above said packing.

In testimony whereof I have hereunto set my hand in the presence of two subscribing witnesses.

LUCIEN R. GRUSS.

Witnesses:
JOHN H. HERRING,
W. W. HEALEY.