June 23, 1942. R. S. BUCK 2,287,021

FUEL SUPPLY SYSTEM

Filed Nov. 4, 1939 2 Sheets-Sheet 1

Fig. 2

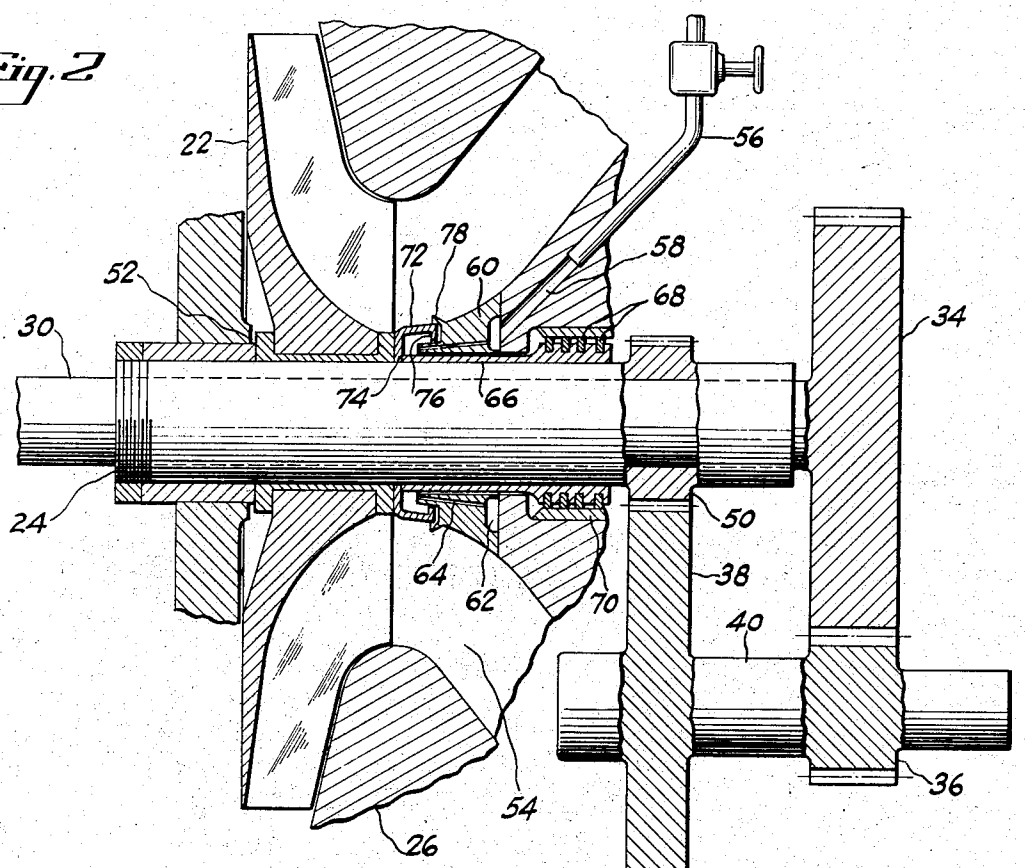

Fig. 1

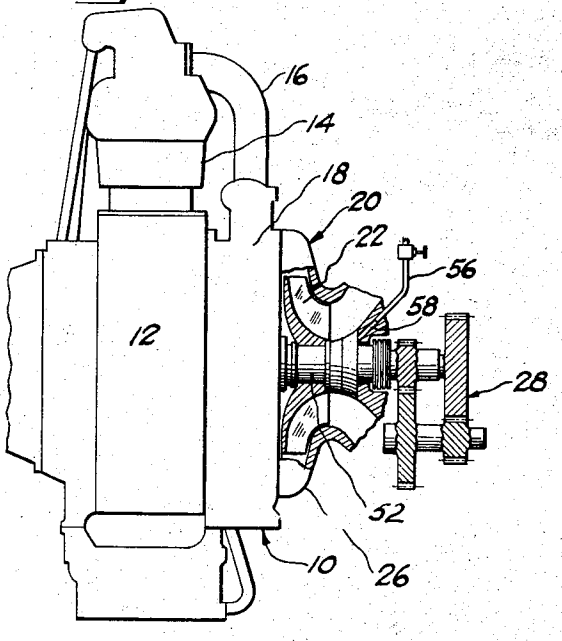

Fig. 3

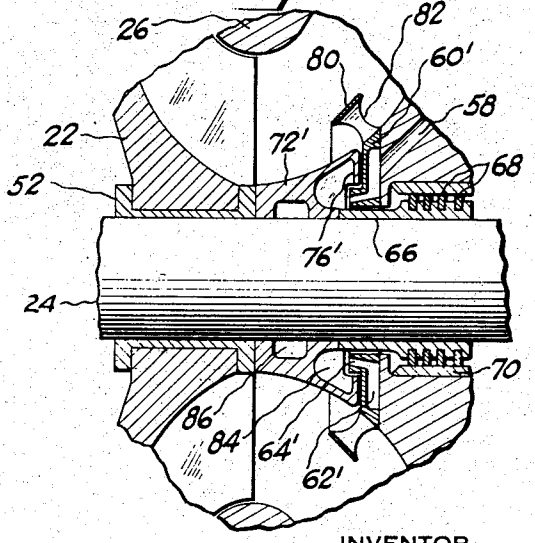

INVENTOR

Richard S. Buck

BY Harris G. Luther

ATTORNEY

June 23, 1942. R. S. BUCK 2,287,021

FUEL SUPPLY SYSTEM

Filed Nov. 4, 1939 2 Sheets-Sheet 2

Fig. 4

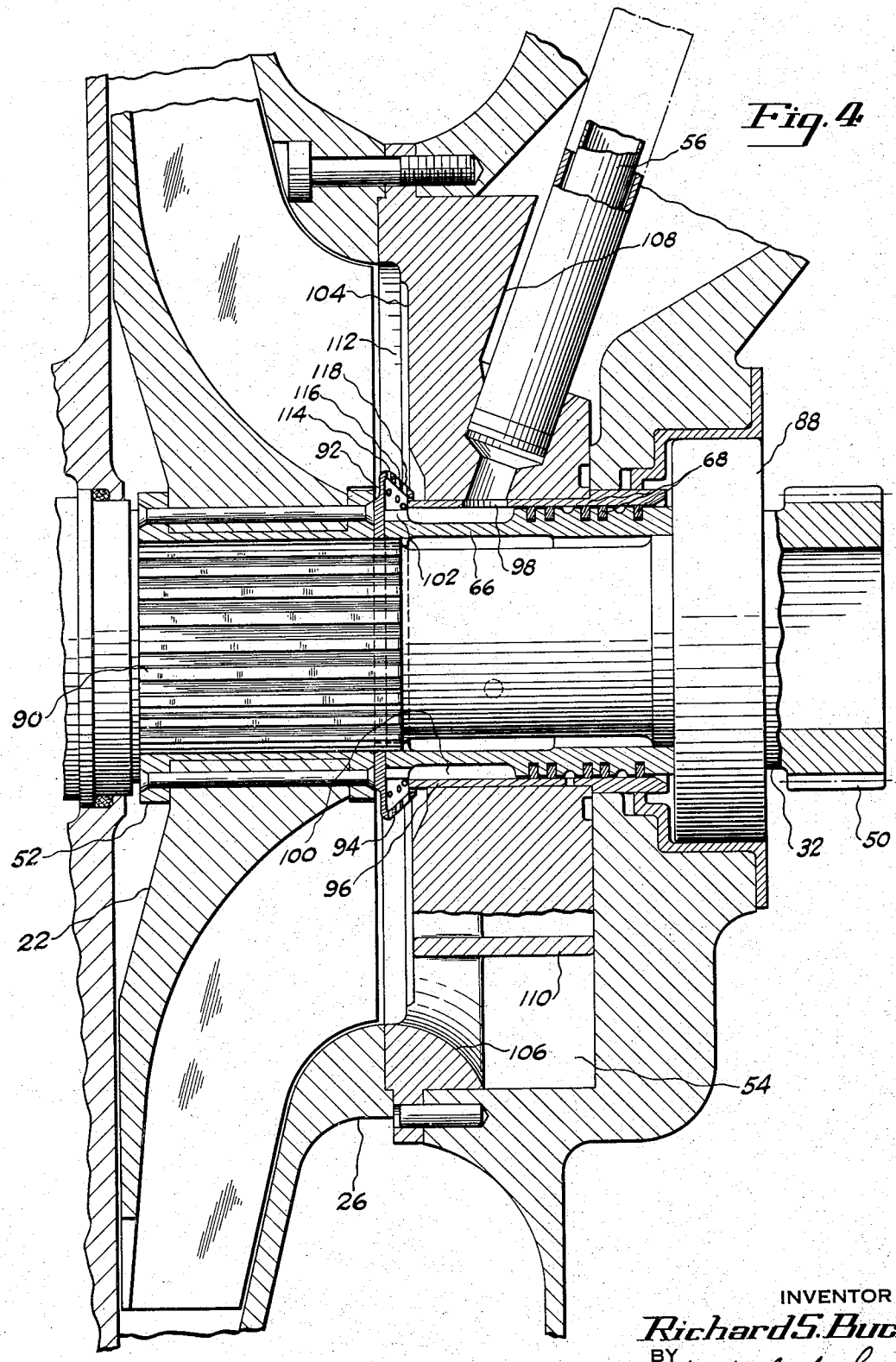

INVENTOR
Richard S. Buck
BY
Harris G. Luther
ATTORNEY

Patented June 23, 1942 2,287,021

UNITED STATES PATENT OFFICE

2,287,021

FUEL SUPPLY SYSTEM

Richard S. Buck, Glastonbury, Conn., assignor to United Aircraft Corporation, East Hartford, Conn., a corporation of Delaware

Application November 4, 1939, Serial No. 302,891

17 Claims. (Cl. 261—90)

This invention relates to improved means for supplying fuel to an internal combustion engine and has particular reference to improved means for supplying fuel to an internal combustion engine equipped with a supercharger for increasing the pressure of the engine intake air.

An object of the invention resides in the provision of improved means for injecting the fuel under pressure into the airstream entering the supercharger.

A further object resides in the provision of improved means of the character described for uniformly distributing the fuel in the airstream about the supercharger intake.

Other objects and advantages will be more particularly described hereinafter or will become apparent as the description proceeds.

In the accompanying drawings, in which like reference numerals are used to designate similar parts throughout, there are illustrated three slightly different mechanical constructions for the purpose of disclosing the invention. The drawings, however, are for the purpose of illustration only and are not to be taken as limiting or restricting the invention as it will be apparent to those skilled in the art that various changes in the illustrated constructions may be resorted to without in any way exceeding the scope of the invention.

In the drawings, Fig. 1 is a diagrammatic elevational view of an internal combustion engine equipped with a supercharger and fuel injector constructed according to the present invention, the supercharger portion being broken away and shown in section to illustrate the application of the improved fuel injector thereto.

Fig. 2 is a longitudinal sectional view through a portion of an engine supercharger, showing a fuel injecting and distributing device, constructed according to the invention, applied thereto.

Fig. 3 is a view similar to Fig. 2 showing a somewhat modified form of fuel injector and distributor constructed according to the invention, and

Fig. 4 is a view similar to Fig. 2 showing a further modified form of fuel injector and distributor constructed according to the invention.

Referring to the drawings in detail, and particularly to Fig. 1, the numeral 10 generally indicates the internal combustion engine which may be of the radial type conventionally employed for the propulsion of aircraft although the invention is not limited to any specific type of internal combustion engine. Such an engine may have a crankcase section 12 around which are disposed a plurality of cylinders, as indicated at 14, connected by means of intake conduits 16 with the outlet of a blower section 18 having at one side thereof the supercharger, generally indicated at 20. The supercharger may include an impeller 22, of conventional form, mounted on an impeller drive shaft 24 within a casing 26 and driven from the engine by the speed increasing gear train, generally indicated at 28 and more particularly illustrated in Fig. 2 which shows the engine tail shaft 30 extending through the impeller 22 and impeller drive sleeve 32 to the drive gear 34 which drives a small gear 36 connected to a larger gear 38 by means of the lay shaft 40, which larger gear 38 drives a small gear 50 on the impeller drive sleeve 24. If desired, a bushing 52 may be disposed between the drive shaft receiving aperture in the impeller and the impeller drive shaft to add strength to the hub portion of the impeller and provide a driving connection between the sleeve and the impeller.

The impeller is provided with an annular air inlet 54 surrounding the drive sleeve 32 in the casing 26 which inlet is connected with some suitable form of intake air duct, not illustrated. The fuel is led through a conduit 56 from some suitable form of fuel pressure regulating device, such as a pressure carburetor, several forms of which are well known to the prior art, operative to proportion the quantity of fuel supplied to the mass flow of the intake air, to a channel 58 extending through the portion of the casing 26 immediately surrounding the impeller drive sleeve within the air entrance 54. A collar 60 is secured to the end of the impeller casing surrounding the impeller drive sleeve and is provided in its face joining the casing with an annular groove 62 communicating with the channel 58. From the channel 62 a plurality of small bores 64 lead to the forward end of the collar and are disposed substantially parallel to the impeller sleeve 32. A sleeve 66 surrounds the impeller drive sleeve within the collar 60 and has a portion projecting within the sleeve surrounding part of the casing 26 which portion is provided with a fluid seal comprising a plurality of seal rings 68 mounted in grooves in the sleeve 66 and cooperating with a bushing 70 mounted in an enlargement of the shaft aperture in the casing. At its front end the sleeve 66 abuts against a hollow annular member 72 which has a forward wall 74 apertured to receive the drive sleeve 32 and has an inturned lip 76 at the end of its annular flange portion opposite the wall 74. The forward end of the collar 60 is reduced in size to fit within

the inturned lip portion 76 of the annular member 72 and has a radial wall overlapping the inturned lip portion which radial wall terminates outwardly in a tapered annular fin 78 disposed at an angle to the forward wall of the collar 60.

In operation the fuel is metered through the conduit 56 to the annular channel 62 from which it flows through the bores 64 into the interior of the hollow annular member 72. As this annular member is spinning with the drive sleeve 32 centrifugal force retains the fuel in the outer portion of the annular member blocked by the inturned lip 76. After the annular member has been filled with fuel, additional fuel supplied through the conduit 56 overflows the inner edge of the lip 76 and flows into the space between this lip and the forward wall of the relatively fixed collar 60. Centrifugal action of the annular member 72 causes this fuel to impinge at relatively high velocity against the angularly disposed fin 78 which breaks the fuel up into minutely small particles and directs it into the airstream flowing into the supercharger impeller 22.

With this arrangement the rotating annular member 72 carries the fuel entirely around the supercharger air intake and provides an even distribution of fuel at all angular positions about the intake while the centrifugal action of the annular member on the fuel overflowing the lip 76 causes a division of the fuel into minute particles which are easily evaporated into the engine intake air flowing into the supercharger to provide a homogeneous air fuel mixture having the same proportion of fuel and air for each cylinder of the engine.

In the form of the invention shown in Fig. 3 the collar 60' and annular member 72' are modified to bring the fuel exit plane a somewhat greater distance from the impeller 22, that is; the collar is made thinner and the annular member is made somewhat longer than in the form shown in Fig. 2, and instead of the flared and tapered fin 78 of Fig. 2, in the form shown in Fig. 3, the collar 60 is provided with an annular vane 80 of substantially frustro-conical shape having its smaller end facing the impeller and supported in spaced relation to the periphery of collar 60 by suitable spaced struts 82. The annular member 72' is also made hollow at its end facing the collar 60' and is provided with an inturned lip 76' of somewhat greater radial extent than the lip 76 of Fig. 2 since the longer annular member 72' has a greater diameter at that end in order to conform to the airflow passages of the impeller air intake. The hollow portion of the annular member 72' may also be provided with transverse vanes 84 to provide for positive rotation of the fuel led into the annular member through the annular channel 62' and bores 64'. The internal groove 86 shown in Fig. 3 is for the purpose of lightening the annular member 72' and plays no part in the fuel distribution function.

While in both forms of fuel injector the fuel supplied to the hollow interior of the annular member is rotated with the annular member, in this modified form the vanes 84 providing for positive fuel rotation with the rotating annular member 72', and the fuel overflows the inner edge of the inturned lip 76' to flow into the space between the rearward surface of this lip and the forward wall of the collar 60' from which it is ejected by the centrifugal action of the rotating annular member to impinge on the flared vane 80 which breaks the fuel up into minutely small particles and directs these particles into the airstream before the air enters the supercharger impeller 22. This construction provides for an even distribution of fuel entirely around the supercharger and for a complete evaporation of the fuel into the intake air before the air is subjected to the high centrifugal forces existing in the impeller so that an even distribution of a uniform fuel mixture to all of the cylinders of the engine is obtained.

In the form of the invention shown in Fig. 4 the bushing 66 is secured on a reduced portion of the impeller sleeve 32 between the impeller bushing 52 and the rear impeller sleeve bearing 38, and has an internally splined portion at the impeller end which engages with the splines 90 provided on the sleeve 32 within the impeller bushing 52 to transmit the driving torque to the impeller. An annular member or fuel spinner 92 mounted on the impeller sleeve between the bushings 52 and 66 and has a radial portion extending between the adjacent ends of these bushings to a splined engagement with the splines 90 and an inturned flange portion 94 providing a partly enclosed annular space within the annular member 92.

A bearing bushing 96 surrounds the portion of the bushing 66 between the annular member 92 and the bearing 38 and cooperates with the seal rings 68 to provide a fluid seal between the rotatable bushing 66 and the relatively fixed bearing bushing 96.

The fuel channel 56 leads through an aperture 98 in the bushing or sleeve 96 and into an annular groove 100 provided in the outer surface of the bushing 66 on the impeller side of the portion carrying the seal rings 68. The end of the bushing 66 abutting the annular member 92 is provided with external ribs or fins 102 extending from the end of this member abutting the radial portion of the annular member 92 to a point just within the adjacent end of the bushing 96, the spaces between these ribs or splines providing fuel passages connecting the annular groove 100 with the interior of the annular member 92. The sleeve 96 is inserted through a central aperture in an air guide member 104 disposed at the inlet of the impeller 22. This member may comprise an annular frame portion 106, a central web portion 108 through which the fuel passage 58 extends, and a plurality of transverse air directing vanes, one of which is indicated at 110. This air guide member is spaced from the adjacent end of the impeller by a distance substantially equal to the width of the annular member 92 thus providing an annular space 112 into which fuel from the annular member 92 may be driven to be picked up by the intake air flowing through the guide member 104 and into the impeller 22.

The inturned portion 94 of the member 92 is disposed at an acute angle to the radial wall portion of the member and terminates adjacent to the outer surface of the bushing 96 at the end thereof. A plurality of small holes or apertures, arranged in annular rows 114, 116 and 118, permit the fuel fed into the interior of the annular member to be ejected into the space 112 where it will be picked up by the airstream flowing into the supercharger. The rows of apertures are graduated in size, the row 114 being composed of the smallest apertures, the row 116 of the largest and the row 118 of apertures of

an intermediate size. With this arrangement, when a small quantity only of fuel is being supplied to the engine it will fill only the outer portion of the hollow interior of the member 92 and will be uniformly projected through the small apertures 114. As the fuel flow increases some of the fuel will be ejected through the apertures 116 and, with a further increase in flow, through the row of apertures 118 so that when the fuel flow is at the maximum fuel will be ejected through all of the apertures and the total area of all of the apertures provides the proper discharge area for the maximum fuel flow.

From the above description of the construction illustrated in Fig. 4 it will be observed that this arrangement also provides for a uniform distribution of the engine fuel in finely divided form into the airstream flowing into the engine supercharger.

While three slightly different mechanical arrangements have been hereinabove described and illustrated in the accompanying drawings for the purpose of disclosing the invention, it is to be understood that the invention is not limited to the particular arrangement so illustrated and described, but that such changes in the size, shape and arrangements of parts may be resorted to as come within the scope of the subjoined claims.

Having now described the invention so that others skilled in the art may clearly understand the same, what it is desired to secure by Letters Patent is as follows:

1. In an engine fuel distribution system, an annular air induction device for supplying engine intake air, a rotatable shaft at the center of said device, a hollow annular member rotatable with said shaft having a reentrant portion effective to retain a quantity of liquid fuel in said member at all times during engine operation, means for supplying fuel to the interior of said annular member for distribution by said annular member about said induction device, and means for minutely dividing the fuel leaving said annular member.

2. In an engine fuel distribution system, an annular air induction device for supplying engine intake air, a rotatable shaft at the center of said device, a hollow annular member rotatable with said shaft for injecting fuel by centrifugal force into the air stream flowing through said induction device and having a reentrant portion effective to retain a quantity of liquid fuel in said member at all times during engine operation, and means surrounding said shaft and projecting into said annular member and having a plurality of annularly spaced passages therethrough for supplying fuel to the interior of said annular member and uniformly distributing the fuel about the interior of said annular member.

3. In an engine intake system, an annular air intake opening, a rotatable shaft at the center of said opening, an annular member having a transverse wall surrounding said shaft and an inturned portion carried by said wall and spaced from said shaft to provide an annular fuel receiving space within said annular member, and means for supplying fuel to the interior of said annular member, said annular member having one or more openings therein through which fuel is ejected into the airstream flowing through said air intake opening as said annular member rotates with said rotatable shaft, at least the major part of the area of said opening or openings being disposed inwardly of the periphery of said annular fuel space.

4. In an engine fuel distribution system, an annular air induction device, a rotatable shaft at the center of said device, an annular member carried by said shaft having a transverse wall at one end and an inturned lip carried by said wall, means for supplying fuel to the interior of said annular member to overflow said inturned lip and be ejected by the rotation of said annular member into the airstream flowing through said induction device, and means for receiving the fuel ejected from said annular member and directing said fuel into said airstream in a finely divided form.

5. In combination with an engine supercharger having an annular air entrance opening, a rotatable shaft at the center of said opening, an annular member carried by said shaft having a transverse wall at one end and an inturned lip at the other, means for supplying a regulated quantity of fuel to said annular member to overflow said lip, and a fixed member surrounding said annular member to receive fuel thrown out from said annular member by centrifugal force and direct said fuel in finely divided form into the airstream entering said supercharger.

6. Means for uniformly distributing liquid fuel into a stream of engine intake air flowing through an annular duct comprising, a rotatable shaft at the center of said duct, an annular member carried by said shaft having a transverse wall at one end and a perforated inturned flange portion carried by said wall, and means for supplying a regulated quantity of fuel to the interior of said annular member to flow through said perforations into said airstream.

7. The arrangement as set forth in claim 6 in which the flanged portion of said annular member is disposed at an acute angle to the transverse wall section thereof and in which the perforations are of different sizes and are arranged in annular rows with the smallest size perforations in the row next to said transverse wall and the largest size perforations in the row most remote from said annular wall.

8. In an engine fuel distribution system, an annular air induction device, a rotatable shaft at the center of said device, an annular member carried by said shaft having a transverse wall at one end and an inturned flange portion carried by said wall, means for supplying a regulated quantity of fuel to said annular member to overflow the lip of said inturned flange portion, and a fixed member surrounding said shaft having passages therein for receiving fuel and distributing it about said annular member and having a portion surrounding said annular member to receive fuel thrown out from said annular member by centrifugal force and direct said fuel in finely divided form into the airstream entering said air induction device.

9. In an engine fuel distribution system, an annular air induction device, a high speed rotatable shaft at the center of said device, an annular member carried by said shaft having a transverse wall at one end and an inturned flange portion carried by said wall, means for supplying fuel to said annular member to overflow the lip of said inturned flange portion, and a fixed member surrounding said shaft having passages therein for receiving said fuel and distributing it about the interior of said annular member and having a flared fin portion surrounding said annular member to receive the fuel thrown out from said annular member by centrifugal force and direct said fuel in finely divided form into the airstream entering said air induction device.

10. In an engine fuel distribution system, an annular air induction device, a rotatable shaft at the center of said device, an annular member carried by said shaft having a transverse wall at one end and a flanged portion with an inturned lip integral with said transverse wall, means for supplying fuel to the interior of said annular member to overflow said lip, and a fixed member surrounding said shaft having passages therein for receiving said fuel and distributing it about the interior of said annular member and having an annular vane surrounding said annular member and spaced therefrom to receive fuel thrown out from said annular member by centrifugal force and direct said fuel in finely divided form into the air stream entering said air induction device.

11. In an engine fuel distribution system, an annular air induction device, a rotatable shaft at the center of said device, an annular member carried by said shaft having a transverse wall at one end and an annular portion with an inturned lip integral with said transverse wall, means for supplying fuel to the interior of said annular member to overflow said lip, a plurality of transverse vanes in the interior of said annular member to constrain the fuel entering said member to rotate therewith, and a fixed member surrounding said annular member to receive fuel thrown out from said annular member by centrifugal force and direct said fuel in finely divided form into the airstream entering said air induction device.

12. In an engine fuel distribution system, an annular air induction device, a rotatable shaft at the center of said device, an annular member carried by said shaft having a transverse wall at one end and a flanged portion with an inturned lip integral with said transverse wall, means for supplying fuel to the interior of said annular member to overflow said lip, and a fixed member surrounding said shaft having passages therein for receiving said fuel and distributing it about the interior of said annular member and having a portion surrounding said annular member to receive fuel thrown out from said annular member by centrifugal force and direct said fuel in finely divided form into the air stream entering said air induction device, and means providing a fluid tight seal between said fixed member and said shaft.

13. In an engine fuel distribution system, an annular air induction device including a rotatable impeller and a high speed drive shaft for said impeller, an annular member on said shaft having at one end an inturned lip spaced from said shaft, a fixed member surrounding said shaft adjacent to said annular member and having passages leading to the interior of said annular member, means connected with said fixed member to supply fuel through said passages to the interior of said annular member to overflow said inturned lip, and means carried by said fixed member for receiving fuel thrown out by centrifugal force from said annular member and directing said fuel in finely divided form into said air induction device.

14. In an engine fuel distribution system, an annular air induction device including a rotatable impeller drive shaft, a hollow annular member on said shaft having a perforate intermediate portion spaced from said shaft, a member carried by said shaft for directing fuel into the interior of said annular member for discharge through said perforate intermediate portion into the airstream entering said air induction device, and relatively fixed means for supplying a regulated quantity of fuel to said shaft carried means.

15. In an engine air induction system including a supercharger having an air impeller mounted on an engine driven shaft, means for adding fuel to the engine intake air comprising, an annular member fixed to said impeller shaft concentrically therewith and having an inturned rim portion providing an annular space for the reception of engine fuel, a second annular member also concentric with said impeller shaft having a portion extending into said annular space and provided with angularly spaced apart channels for conducting fuel into said annular space, and a fuel conduit extending through a relatively fixed part of said supercharger to said second annular member.

16. In an engine intake system, an engine driven impeller shaft, a supercharger impeller fixed on said shaft, a supercharger casing surrounding said impeller and supporting said shaft, a hollow annular member on said shaft adjacent to said impeller and rotatable therewith and having one or more openings leading from the interior to the exterior thereof around said shaft, a second annular member surrounding said shaft and having a portion extending within said hollow annular member, fuel channels in said second annular member leading to the interior of said hollow annular member, and means for conducting fuel to said fuel channels.

17. A fuel distributing element for an engine intake system including an impeller and an impeller driving shaft comprising, an annular member mounted on said shaft adjacent to said impeller and having on the impeller side thereof an impervious radial wall operatively connected with said shaft, said annular member having a rim with an inturned portion to provide an annular chamber surrounding said shaft and one or more openings therein constituting a fuel passage between said annular chamber and the exterior of said annular member, the greater portion of the total area of said fuel passage being disposed radially inwardly of the maximum circumference of said annular chamber.

RICHARD S. BUCK.