July 14, 1942. M. W. MUEHTER 2,289,517

RADIO ALARM SYSTEM

Filed Sept. 30, 1938 2 Sheets-Sheet 1

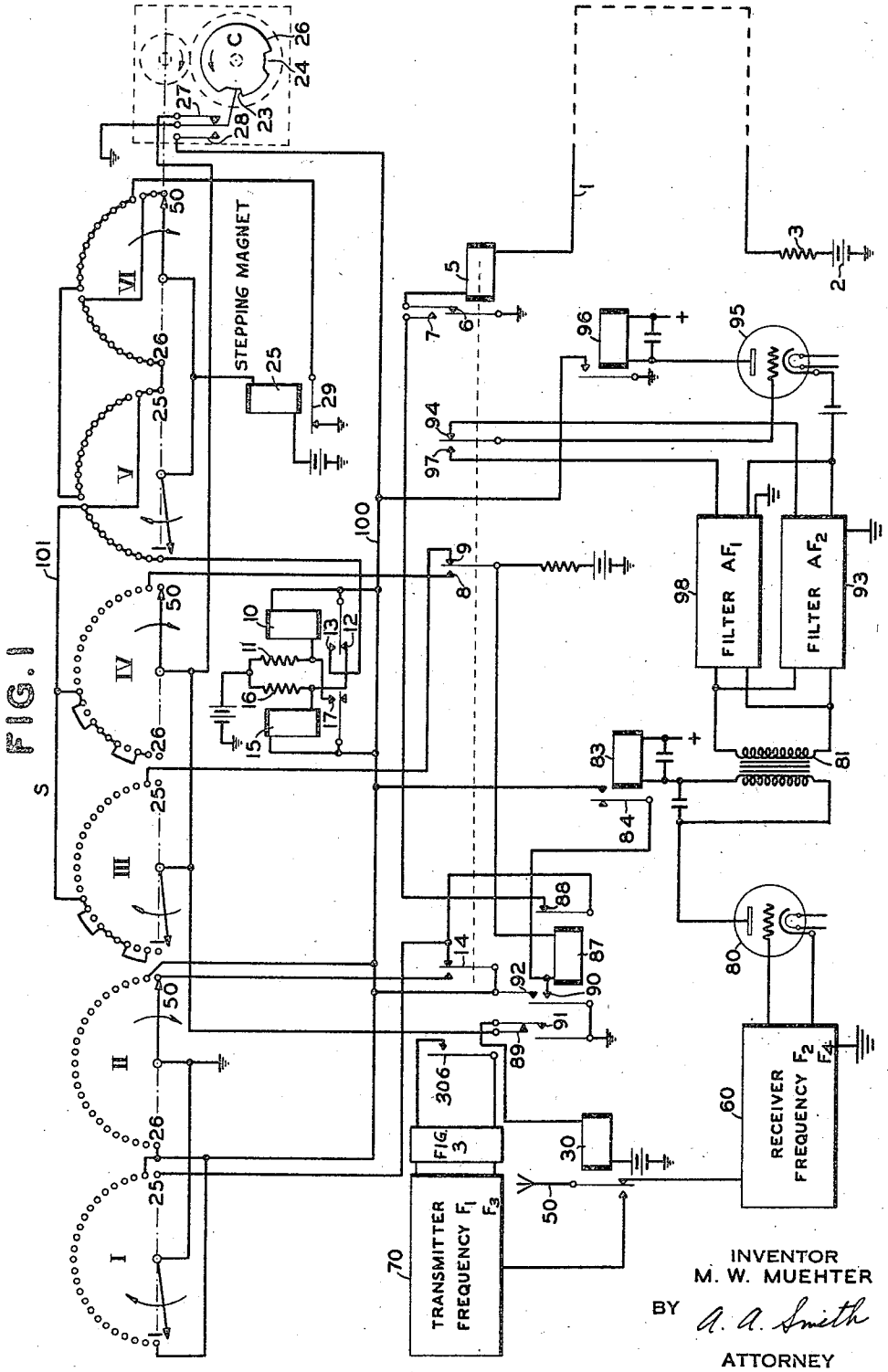

INVENTOR
M. W. MUEHTER
BY A. A. Smith
ATTORNEY

FIG. 2

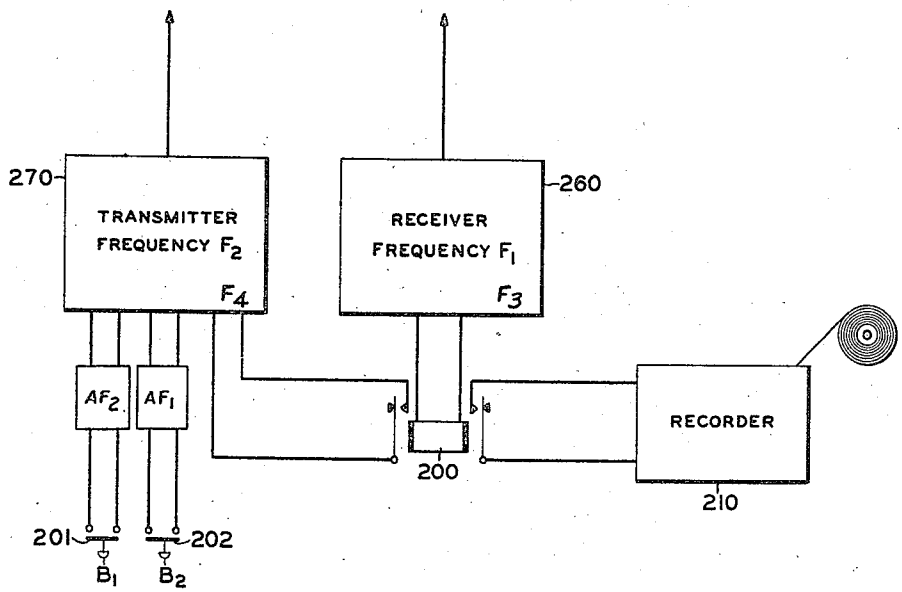

FIG. 3

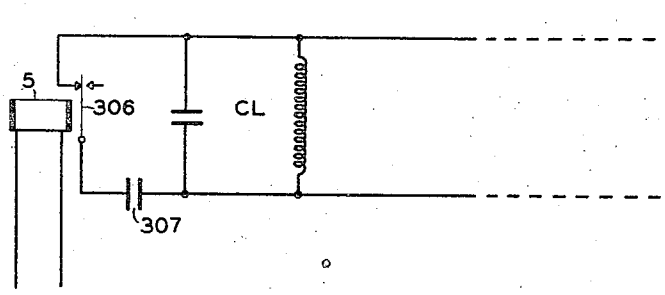

INVENTOR
M. W. MUEHTER
BY A. A. Smith
ATTORNEY

Patented July 14, 1942 2,289,517

UNITED STATES PATENT OFFICE

2,289,517

RADIO ALARM SYSTEM

Manfred W. Muehter, Nutley, N. J., assignor to The American District Telegraph Company, New York, N. Y., a corporation of New Jersey

Application September 30, 1938, Serial No. 232,518

7 Claims. (Cl. 177—361)

This invention relates generally to signaling systems of the type used for detecting burglaries or for detecting fire in a subscriber's premises, and it relates more particularly to a radio system of the above mentioned character wherein each subscriber's premises is provided with a radio transmitter and receiver and means for operating the transmitter to send an alarm signal. A central station is provided which consists of a radio receiver adapted to receive signals from the subscriber's apparatus to thereby control a recording device or other signal means. The central station also includes a radio transmitter controlled by the radio receiver which repeats the alarm signals for the purpose of preventing interference between the remote substations while one substation is in operation.

The principal object of this invention is to provide a novel and improved alarm system which does not require line conductors between the subscriber's premises and the central station.

A further object of this invention is to provide an improved radio alarm system wherein each subscriber is equipped with a radio transmitter and receiver for transmitting alarm signals to a central station.

A still further object of this invention is to provide in connection with a radio alarm system, a lockout system for preventing interference between substations.

Another object of this invention is to provide a radio alarm system which comprises a plurality of substations and a central station and wherein each substation is provided with a means for receiving signals which in turn prevent or control transmission of alarm signals from that station.

Still another object of this invention is to provide a radio alarm system which can not be disabled by an unauthorized person.

A still further object of this invention is to provide a radio alarm system wherein the radio carriers are changed in such a manner that an unauthorized person cannot disable or lock out the entire system.

Other objects and advantages of this invention will be evident to those skilled in the art from an inspection of the accompanying drawings in which:

Fig. 1 shows a circuit diagram of a substation embodying the invention;

Fig. 2 shows the central station apparatus; and

Fig. 3 shows a circuit diagram of a modification of the invention wherein is provided a means for preventing lockout by an unauthorized person.

In general the radio alarm system comprises a number of subscribers' stations, each subscriber being provided with a radio transmitter and receiver, the radio transmitter being controlled by a supervisory alarm circuit of the conventional type. In case of an alarm, a coded signal is transmitted by the transmitter on a carrier common to all subscribers' transmitters and is received at a central station which comprises a radio receiver and transmitter, the radio receiver controlling a recording apparatus or other form of signal. The central station transmitter repeats the incoming signal from a subscriber's premises over a different carrier frequency, this being the frequency to which the receivers at all of the subscribers' premises are tuned. The subscriber's receiver in turn operates under the control of the central station signals to prevent interference in the event that two subscribers' stations operate simultaneously. Thus it is impossible for two subscribers' stations to come on the air at the same time and thereby cause a confusion of signals to prevent the reception of an intelligible alarm signal. The transmitters provided at the subscribers' premises may be only powerful enough to transmit signals to the central station receiver while the receivers at the subscribers' premises need be only sensitive enough to respond to the central station transmitter which may be a powerful transmitter. The central station receiver may be more sensitive and elaborate in order to insure reception of alarm signals as this does not add much to the cost of the entire system.

The subscriber's station is shown for a burglar alarm application but could also be used for other supervisory purposes, such as fire detection or a watchman's tour system. The subscriber's premises is provided with a burglar alarm detecting circuit 1 which may be of the conventional type and needs no detailed description. The alarm circuit controls an alarm relay 5 which in turn controls a pair of impulsing relays 10 and 15. The impulsing relays control a selector switch having an operating electromagnet 25 to thereby control a switching relay 30 and the connection of antenna 50 to the radio receiver 60 or radio transmitter 70. The radio receiver 60 is adapted to receive the lockout signals from the central station and apply them through the radio frequency detector 80 to relay 83, which relay controls the noninterference relay 87. The received radio signals are also applied through filters 93 and 98 to an audio frequency detector 95 for the purpose of controlling the relay 96 to thereby provide a

means of testing each subscriber's station at regular intervals.

The central station shown in Fig. 2 consists of a radio receiver 260 and a radio transmitter 270. The central station receiver responds to the alarm signals transmitted from the substations and accomplishes a double purpose, first, to record the alarm signals, and second, to control the transmitter 270 which in turn locks out all substation transmitters except the one which first transmits its alarm signal.

The local alarm circuit 1 in Fig. 1 can be traced from grounded battery 2, a protective resistor 3, the protective circuit relay 5 and its fourth make contact 6 to ground through an obvious circuit, thereby keeping relay 5 normally energized. In case of a break in the protective circuit 1 due to the operation of a burglar detecting switch or the like, relay 5 is deenergized and closing its first back contact 14 applies ground potential through bank contact 50, the normal rest position of the second bank of selector S, to operating conductor 100. A circuit is thereby closed from this conductor through the coil of relay 10 and a series resistor 11 to battery and ground, causing this relay to operate. Relay 10 is a so-called impulsing relay which generates the impulses for the transmission of an alarm signal in conjunction with an auxiliary relay 15.

Before proceeding with a further description, the action of these two relays will be explained. Relay 10 operating removes a shunt from the coil of relay 15 by opening its back contact 12 thereby allowing relay 15 to operate from operating conductor 100 through the coil of relay 15 and a series resistor 16 to battery and ground. Relay 15 picks up and closing its contact 17 shunts the coil of relay 10 causing it to release with a slight delay. When relay 10 closes its back contact 12, the coil of relay 15 is shunted out thereby releasing with a slight delay. Relay 15 opening its contact 17 removes the shunt from relay 10 permitting it to pick up again thereby starting another cycle of operation. This inter-action between relays 10 and 15 continues during the whole time of a signal.

The first operation of relay 10 closes a circuit from operating conductor 100 through its make contact 13, bank contact 1 and the connected contacts of bank V, to bank contact 26 and associated contacts, to bank contact 50 of bank VI of selector S, through its wiper and through the selector magnet 25 to battery thereby energizing the stepping magnet 25. The stepping magnet attracts its armature, engaging the next tooth of its ratchet wheel to advance it one step upon the release of relay 10 thereby moving the selector wipers to position 1. The following pulses for the coil of stepping magnet 25 are transmitted through bank V and will be obvious from the drawing. The selector switch consists of six banks of contacts as shown in the drawings, the contact arm of each bank being stepped through fifty steps in each cycle of operation. Thus banks I, III and V are effective during the first twenty-five steps while banks II, IV and VI are effective during steps 26 to 50. A switch consisting of three banks of fifty contacts may be wired as shown in which case only three contact arms are necessary.

It is evident that normally relay 30 is energized from battery through its coil, the left hand back contact 89 of relay 87 and the normally closed contact 27 of cam 26 to ground. This relay 30 is the transmission switching relay which changes the subscriber's radio equipment from the receiving to the transmitting position and vice versa. In the normally energized position the equipment is connected for receiving as shown. In the illustrated form, relay 30 merely switches the antenna 50 from the receiver 60 to the transmitter 70, but it may be arranged to perform any desired function in connection with the switchover as for instance performing internal circuit changes in a combination transmitter-receiver.

The receiver 60 at the subscriber's premises operates a radio frequency detector 80 which rectifies the received radio frequency impulses causing them to operate relay 83. If no impulses are received at the time a subscriber's transmitter 70 attempts to send a signal, it means that there is no interference from other sources such as other subscribers' stations and the transmitter can go ahead with its signal. This case will be considered first. No impulse is transmitted by the subscriber's transmitter until selector S is operated a second time by relay 10 and reaches position No. 2. It will be noticed that as soon as selector S leaves position No. 50 the starting circuit that applied ground to conductor 100 is open at bank contact 50 of bank II but ground is again supplied through bank contact 1 on bank I. As the following step of the selector operates the cam contact 28 of cam 26 to the make position, ground potential is maintained thereafter on conductor 100 through the make contact 28 of the cam 26. Cam 26 is driven by selector S through a one to four ratio by any convenient arrangement of gears.

When, on step 2 of the selector, contact 28 closes, contact 27 is opened and the opening of this contact causes transmission relay 30 to release and to connect the antenna 50 to the transmitter 70. A radio impulse of a frequency F1, for instance, is transmitted and received at the central station shown in Fig. 2 where a receiving relay 200 operates a recorder 210 and at the same time causes a transmitter 270 to transmit an impulse of frequency F2, for instance. This repeated impulse has no effect on the transmitting subscriber's receiver, since this receiver is not connected to the antenna 50 at this time. When relay 10 is again energized, the circuit is again closed for relay 30 from ground through contact 28 of cam 26, through conductor 100 and the make contact 13 of relay 10, the 1st and following bank contacts of bank V of selector S, conductor 101, the second bank contact of bank III of selector S, and its wiper, the left hand back contact 89 of relay 87 and the coil of relay 30 to battery. Relay 30 is operated, disconnects the transmitter 70 from the antenna 50 and reconnects the receiver 60 to the antenna. The transmission of the impulse of frequency F1 is thus discontinued to in turn stop the transmission of frequency F2 at the central station so that no signal is received at the subscriber's premises. At the same time, selector S is energized again to advance its wipers to position No. 3 on the subsequent release of relay 10. Relay 30 is again deenergized, causing the transmission of another radio impulse of frequency F1.

When relay 10 picks up the next time, the circuit for relay 30 is not closed since it is open at bank contact 3 of bank 3 of selector S. This radio impulse is therefore of longer duration and signifies the end of the first digit which, therefore, is 2.

Following the release of relay 10, selector S is advanced to position No. 4. When relay 10 is

reenergized, a circuit is again closed for relay 30 from ground through contact 28 of cam 26, contact 13 of relay 10, through the first and following contacts of V of selector S, conductor 101, the fourth contact of bank 3, contact 89 of relay 87 through the coil of relay 30 to battery, again interrupting the transmission of the radio impulse. Another pulse is transmitted when relay 10 is deenergized, at which time selector S advances its wipers to position No. 5. A second pulse is transmitted at the time the selector S advances its wipers to position No. 6 etc. until the fourth pulse is transmitted when the selector advances to position No. 8. Up to this time, relay 10 has energized relay 30 every time relay 10 picked up, but in position No. 8 of selector S, the operating circuit for relay 30 is open at bank contact No. 8 of bank 3 of the selector S, causing the transmission of a longer radio pulse and signifying the end of the second digit, which is 4.

In a similar manner, the third and last digit is transmitted and consists of one short and one long impulse. At the time selector S advances to position No. 11 at the start of the second impulse of the last digit, the circuit of its coil 25 is switched by its fifth bank and wiper through interrupter contact 29 of selector S to ground, causing the selector to operate in self-interrupted drive until it reaches position 23 at which time it again operates through its normal circuit. Relay 30 remains deenergized until the selector reaches position 27 starting the beginning of the second round. In this case, the code is determined by the wiring of the fourth bank of selector S. It will be noticed that the wiring is slightly different, causing the transmission of code 342 instead of 242, as in the previous case of the example shown. The second signal is used as a restoration signal as will be seen later, but it serves as the second round of the alarm in this particular case. The third round is again transmitted as alarm signal "242." At the end of the third round, the second notch 24 of cam 26 will come into position and allow the associated pen spring to drop as the selector S reaches position 24. Make contact 28 of cam 26 is open but ground potential is maintained on conductor 100 through bank contact 24 of bank I in selector S. The back contact 27 of cam 26 closes to energize relay 30, thereby restoring it to its normal condition. When selector S advances to position 25, ground potential is removed from conductor 100 and the transmission of the signal is completed.

When the protective circuit 1 is restored to its normal closed position, relay 5 picks up again from battery 2 through resistor 3, the protective circuit 1, the coil of relay 5, the back contact 7 of its make before break contact assembly, right hand back contact 88 of relay 87, and bank contact 25 of bank I of selector S to ground. Thus relay 5 operates and connects itself directly to ground through the make contact 6 of its make before break contact. The first make contact of relay 5 closing applies ground potential from ground through bank contact 25 of bank I and its wiper, through make contact 14 to conductor 100, thereby starting the transmitter for a new signal. It will be noticed that the code is transmitted in accordance with the wiring of the fourth bank, indicating a restoration signal. At the end of the signal, the first notch 23 of cam 26 is again brought into operative position but only one round of signals is transmitted in this case. The pen spring of cam 26 drops into the notch 23 at the time the selector reaches position 49. Make contact 28 of cam 26 is open, but ground is maintained on contact 100 through the bank contact 49 of bank II. When the selector reaches position 50, the transmission of the restoration signal is completed.

If at the time a subscriber's station attempts to send a signal, another station is transmitting its signal, at least one pulse of frequency F2 will be received before the first impulse of the code is transmitted. The received impulse is rectified in radio frequency detector 80 and operates relay 83 which closes its contact 84 to energize relay 87 through an obvious circuit. Relay 87 locks in through its lower second left hand contact 90 to ground. By operating its make before break contact 91, it energizes relay 30 through an obvious circuit, thereby keeping the transmitter off the air. Selector S continues to advance without sending any signal and if the station is attempting to transmit an alarm signal the selector will complete its alarm cycle. When it reaches position 25 of what would normally be the third alarm round, it does not come to a stop since ground potential is maintained on conductor 100 through the upper second left hand make contact 92 of relay 87. If the protective circuit should in the meantime have been restored to its normal closed condition, relay 5 does not pick up at this time, as it would if the alarm had been transmitted, because the right hand back contact 88 of relay 87 is open.

Selector S continues to operate until it reaches position 49, one step ahead of its normal rest position. The cam contacts 27 and 28 of cam 26 are restored to their normal condition thereby closing a circuit from ground through contact 27, bank contact 49 of bank IV of selector S and through the second back contact 6 of relay 5 to the right hand terminal of the coil of relay 87. As its left hand side is also connected to ground, this relay is thereby shunted and caused to release. When selector S reaches position 50 everything will be in the starting condition and the station will again attempt to send its signals. The signal will be sent unless another station in the meantime has begun to transmit its signal. Similar conditions exist if a station is locked out when attempting to transmit a restoration signal. In this case, selector S is also kept operating at the end of what would normally be its signal round, due to the upper second left hand contact 92 of relay 87 maintaining ground on conductor 100. In this case, selector S will continue to step through what normally are the three alarm rounds until the pen springs drop in the second notch of cam 26 in position 24 of the selector. At this time a shunt circuit for relay 87 is closed from ground through contact 27, bank contact 24 of bank III of the selector and make contact 9 of relay 5, right hand terminal of coil 87, causing it to release. When selector S reaches position 25 it will be in the same position as it was when it attempted to transmit a restoration signal and proceed to do so on the second trial unless there is some further interference.

Even if two stations start to transmit their signal at the same time, only one will be able to proceed and the other station will be locked out since, during the interval between successive impulses of radio frequency F1 transmitted by a station, its receiver is reconnected to the antenna, the lock-out relay 83 is operated as soon as there is the slightest difference in the synchronism of the pulses transmitted by two stations. This occurs when one station is in the

sending condition while the other one is in the spacing or receiving condition. The second station will be locked out.

In order to provide supervision of the subscriber's station against failure of the equipment, as for instance burning out of tubes and the like, it is proposed to transmit trip impulses at regular intervals, for instance every fifteen minutes, from the central station. The button 201 at the transmitter shown in Fig. 2 is provided for this purpose and would be operated once every fifteen minutes either manually or by a timing device. The transmitter 270 at the central station is so arranged that operation of button 201 causes a pulse of radio frequency F2 modulated by audio frequency AF2 to be transmitted. This pulse will be received by all stations and be demodulated by the radio frequency detector 80 at the receiving station. The audio frequency component then passes through a transformer 81, a filter 93 and through the third make contact 94 of relay 5 to the grid of another detector 95. This detector rectifies the audio frequency and operates the relay 96 which in turn applies ground potential to the conductor 100, thereby starting the selector S. Relay 83 is also operated by the received trip impulse to in turn operate relay 87. The station is now in the same condition as if it had been locked out on attempting to transmit its restoration signal. The restoration signals will be repeated one station at a time so that a signal will be received from every station and the operator will thus have an indication if there is a failure at one of the stations.

If, due to static, an alarm signal has not been properly received, the central station operator can cause a repetition of the alarm signal by operating button 202 at the central station transmitter. This causes a pulse of radio frequency F2, modulated by audio frequency AF1 to be transmitted, this pulse being received by all stations. However, it will only have an effect on the station that is in the alarm condition, as the audio detector can only receive current of audio frequency AF1 through filter 98 and break contact 97 of relay 5. This causes operation of relays 96, 83 and 87 of that particular station, which now is in the same condition as if it had made an unsuccessful attempt to transmit its alarm signal. The station will now proceed to repeat its signal and if the reception at the central station is satisfactory the subscriber's circuit will go back to normal condition in the usual manner.

The subscriber's station in Fig. 1 is shown as an example only, the complete system including any number of such stations, each station having the selector S connected to transmit the proper identifying coded signal.

Fig. 3 of the drawings shows a means for converting the radio system to one wherein secrecy of operation is accomplished. It might be possible for intruders to detect, during test periods, the carrier frequencies being transmitted in the ordinary radio alarm system and therefore it is necessary to provide a means for rendering the system secret. The prior art shows numerous secrecy systems for use in telephone and telegraph communication systems such as frequency inversion and carrier wobbling. It is possible to use such secrecy systems in order to obtain secrecy in this radio alarm system. However, it is also feasible to use different carriers for testing the circuit and for transmitting a radio alarm. Fig. 3 shows such an arrangement adapted for use in radio alarm systems such as that shown in Figs. 1 and 2 and which is controlled by the protective circuit 1. When an alarm condition releases the alarm relay 5, an additional contact 306 or contacts may be opened to change the tuning of the circuits in the radio transmitter 70 and the radio receiver 60 shown in Fig. 1. The opening of contact 306 removes a condenser 307 from the tuning circuit CL, causing transmission and reception of frequencies F3 and F4 instead of frequencies F1 and F2. The receiver at the central station should be able to receive frequencies F1 and F3 while the transmitter should be arranged to transmit impulses of frequencies F2 and F4 depending upon whether test signals or alarm signals are being transmitted or received. Thus during testing of the subscribers' stations frequencies F1 and F2 would be transmitted and received, while during transmission of actual alarm signals, frequencies F3 and F4 would be used. It is thus made difficult for intruders to ascertain the alarm and lockout frequencies of the carriers used for transmitting alarms and therefore the system is secret and cannot be easily defeated or locked out.

For instance, an intruder, desiring to defeat the system, might detect the carrier F2 used for test purposes and then lock out the subscribers' stations by broadcasting the carrier F2. The secrecy system prevents lockout by changing the carrier during alarm transmission, which is infrequent and therefore difficult for intruders to detect. If an intruder locks out the subscribers' stations by broadcasting frequency F2, an alarm at a subscriber's station will change the tuning of the subscriber's receiver thereby cutting off frequency F2 and allowing transmission of the alarm.

Consideration of the above disclosure reveals that I have provided a new and improved radio alarm system, which not only provides facilities for radio transmission of alarm signals but also provides means of supervising the system at all times. The system further includes means for obtaining the repetition of signals in the event that natural interference distorts the signal or prevents any part of its reception.

Further modifications and advantages of the radio alarm system within the scope of the appended claims will be apparent to those skilled in the art.

What is claimed is:

1. In a radio alarm system, a central station comprising a radio transmitter for transmitting a carrier, a radio receiver for receiving a different carrier and a recorder, a plurality of remote subscriber's stations, each comprising a radio transmitter for transmitting messages to the central station receiver and a protective circuit, coding means responsive to said protective circuit for controlling transmission of an alarm signal by said subscriber's radio transmitter, means in the output of said central station receiver responsive to alarm signals from the subscriber's stations for controlling the transmitter and recorder at the central station whereby lockout signals are transmitted and received signals are recorded, a radio receiver at each subscriber's station responsive to signals radiated by said central station transmitter, a detector for rectifying the output of said receiver, a relay controlled by said detector for disconnecting the local transmitter from the antenna, thereby preventing simultaneous transmission by more than one subscriber's station and means responsive to said substation receiver for causing said sub-

station coding means to repeat its signals when another subscriber's station is transmitting signals.

2. In a radio alarm system, a central station comprising a radio transmitter, for transmitting a certain carrier, a radio receiver for receiving another carrier and a recorder, a plurality of subscriber's stations, each comprising a radio transmitter for transmitting signals to the central station receiver, a code impulse transmitter for controlling transmission by said subscriber's radio transmitter, a protective circuit for controlling said impulse transmitter, means in the output of said central station receiver responsive to received code impulses for controlling the transmitter and recorder at said central station whereby lockout signals are transmitted and received signals are recorded, radio receivers at said subscriber's stations responsive to said lockout signals from the central station transmitter, means responsive to the subscriber's receivers for disconnecting the local transmitter from the antenna, thereby preventing simultaneous transmission by more than one subscriber's station, a cam controlled by said impulse transmitter for causing said impulse transmitter to repeat its code and means responsive to a lockout signal for maintaining repetition of the code until the central station is idle.

3. In a radio alarm system, a central station comprising a radio transmitter for transmitting a certain carrier and a radio receiver for receiving a different carrier, a plurality of remote subscriber's stations each comprising a radio transmitter, a code impulse generator for controlling transmission by said subscriber's radio transmitter, a protective circuit including an alarm relay for controlling said code impulse generator, a receiver at said subscriber's station responsive to said central station receiver, means at the central station for transmitting test signals, means at said subscriber's station responsive to said test signals to cause transmission of a responsive signal by said code impulse generator, and means responsive to said alarm relay for changing the tuning of said subscriber's transmitter and causing transmission of alarm signals on a different frequency from that used in testing.

4. In a signaling system, a central station comprising a transmitter and receiver, said transmitter being adapted to transmit a carrier modulated by either of two audio frequencies, a substation comprising a radio transmitter, a radio receiver and a code impulse transmitter for controlling the radio transmitter, a lockout relay responsive to the carrier from said central station transmitter for disabling said substation transmitter and maintaining said code transmitter in operation until its code has been transmitted, a repeat circuit coupled to and controlled by the substation receiver and responsive to one of said audio frequencies for controlling said code transmitter to repeat the code after its initial transmission and a test circuit coupled to and controlled by said substation receiver and responsive to the other audio frequency for controlling said code transmitter to send a test signal.

5. In a signaling system, a central station comprising a transmitter and receiver, said transmitter being adapted to transmit a carrier modulated by either of two audio frequencies, a substation comprising a radio transmitter, a radio receiver and a code impulse transmitter for controlling the transmitter, means responsive to the carrier from said central station transmitter for disabling said substation transmitter and maintaining said code transmitter in operation until its code has been transmitted, means controlled by the substation receiver and responsive to one of said audio frequencies for controlling said code transmitter to repeat the code after its initial transmission and also controlled by said substation receiver in response to the other audio frequency for controlling said code transmitter to send a test signal.

6. In a radio signaling system, a central station comprising a radio receiver and a transmitter for transmitting control impulses, a signal means controlled by said receiver, a subscriber's station comprising a radio transmitter, a protective circuit, means responsive to said protective circuit for controlling the subscriber's transmitter to thereby transmit an alarm signal and other signals, a receiver at the subscriber's station for receiving said control impulses and means responsive to said protective circuit for tuning said subscriber's transmitter to transmit on a certain carrier during alarm signals and for tuning said subscriber's transmitter during said other signals or during reception of said control impulses for transmitting on a different carrier to thereby provide secrecy of transmission.

7. In a signaling system, a central station including a radio receiver and a radio transmitter controlled thereby for transmitting lockout signals in response to received signals, a subscriber's station comprising a protective circuit, a code transmitter controlled by the protective circuit, a transmission switching relay energized and deenergized in accordance with the code created by the code transmitter, a radio transmitter controlled by said transmission relay whereby the code is radiated, a radio receiver and a lockout relay controlled by the receiver in response to lockout signals transmitted from said central station transmitter in response to signals from another subscriber's station for preventing actuation of the transmission switching relay and maintaining the code transmitter in operative condition through the lockout period and until the code has been transmitted a predetermined number of times.

MANFRED W. MUEHTER.