Dec. 23, 1952 S. COHN ET AL 2,622,817

WINDING MECHANISM

Filed Dec. 13, 1945 4 Sheets-Sheet 1

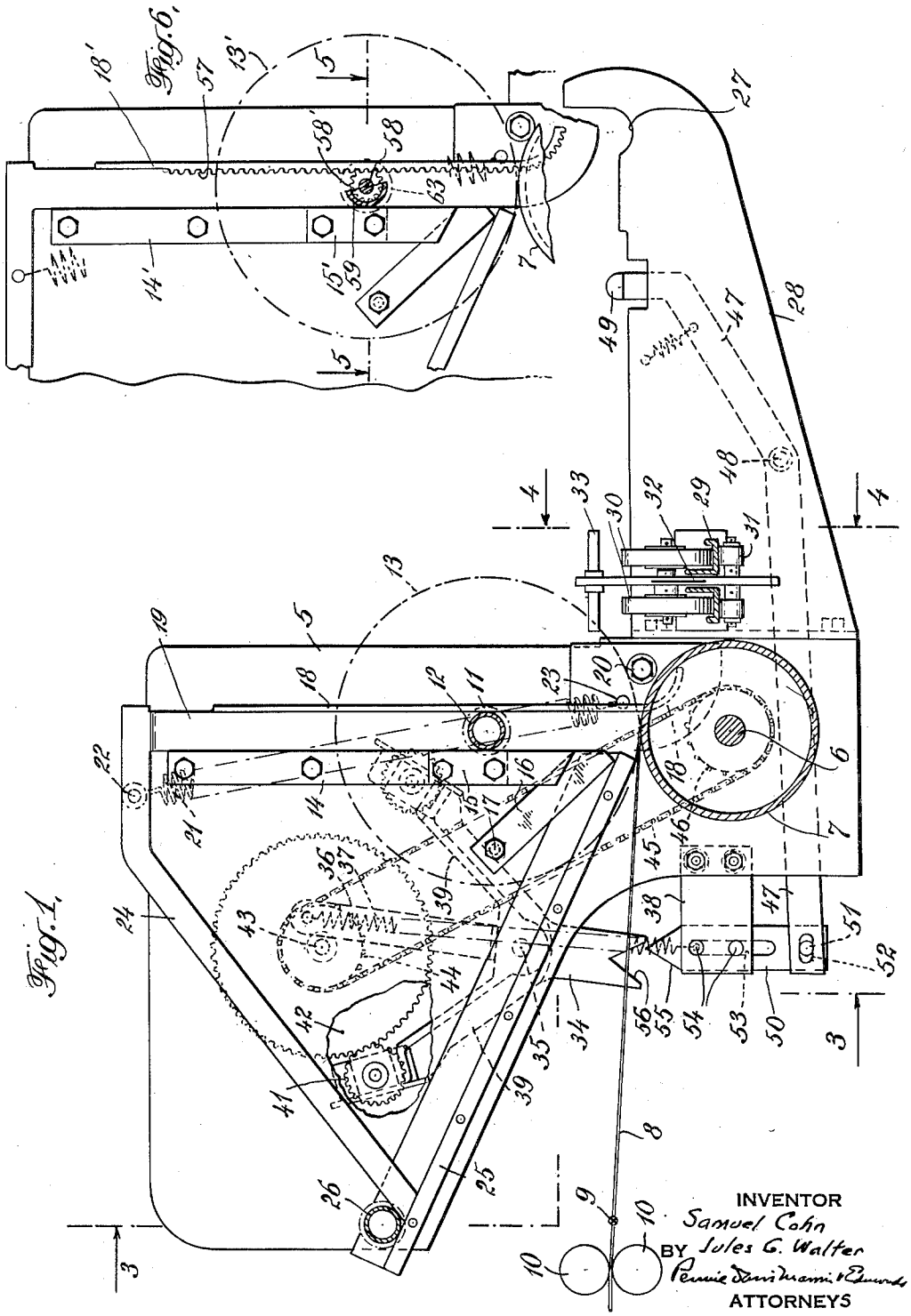

Fig. 1.



Fig. 6.

INVENTOR
Samuel Cohn
BY Jules G. Walter
Pennie Davis Marvin & Edmonds
ATTORNEYS

Dec. 23, 1952 S. COHN ET AL 2,622,817

WINDING MECHANISM

Filed Dec. 13, 1945 4 Sheets-Sheet 2

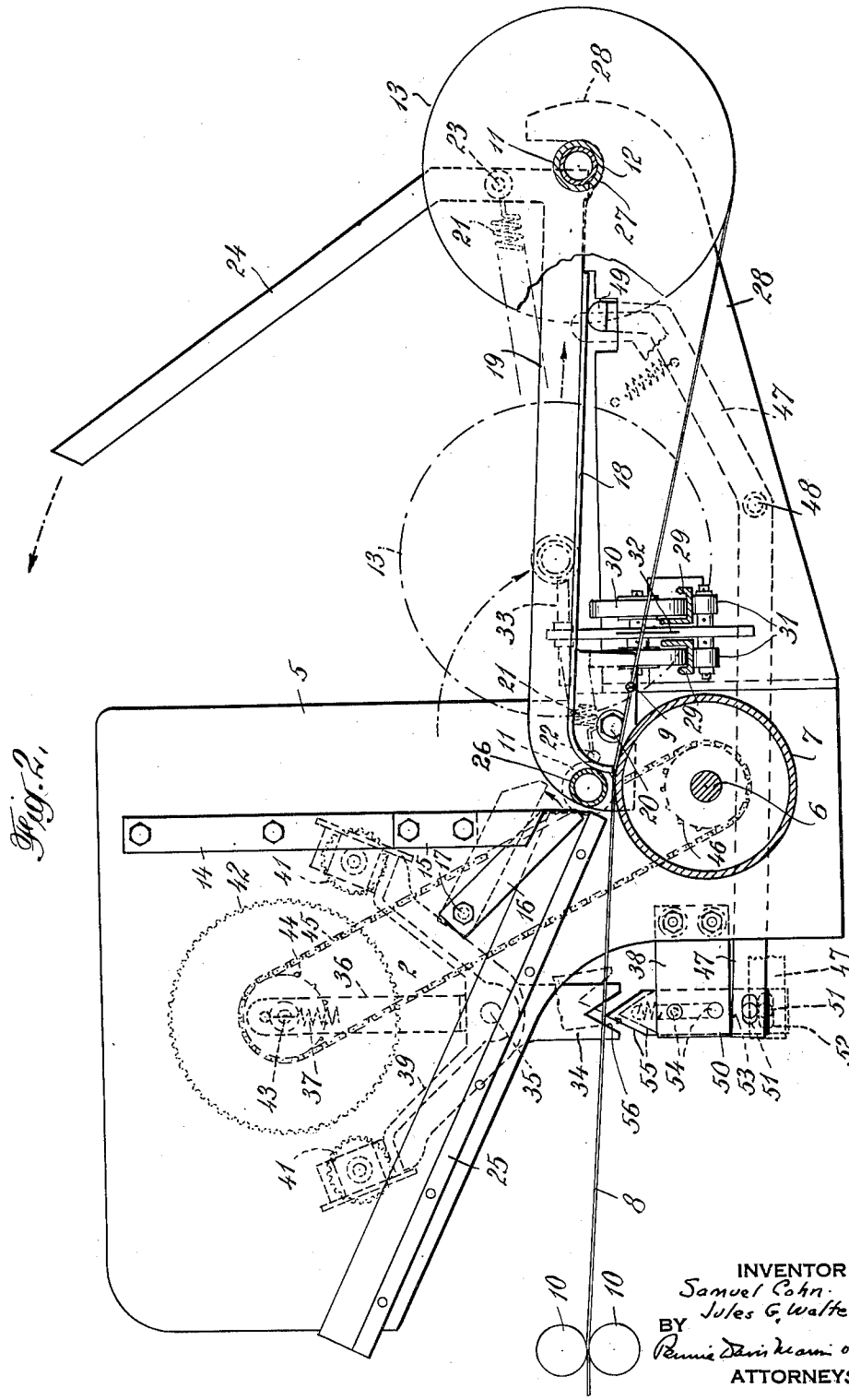

Fig. 2.

INVENTOR
Samuel Cohn
Jules G. Walter
BY
Pennie Davis Kearn & Edmonds
ATTORNEYS

Dec. 23, 1952 S. COHN ET AL 2,622,817

WINDING MECHANISM

Filed Dec. 13, 1945 4 Sheets-Sheet 3

Fig. 4,

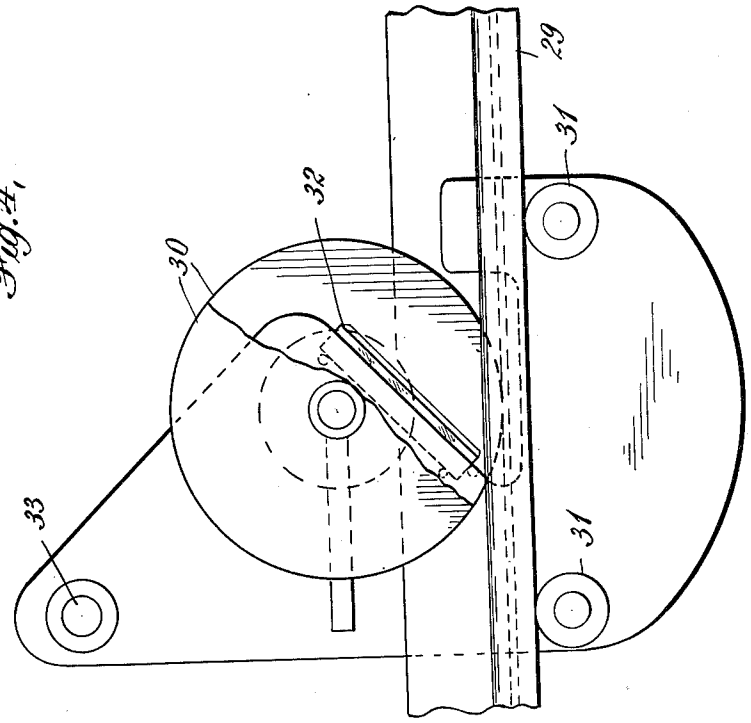


Fig. 3,

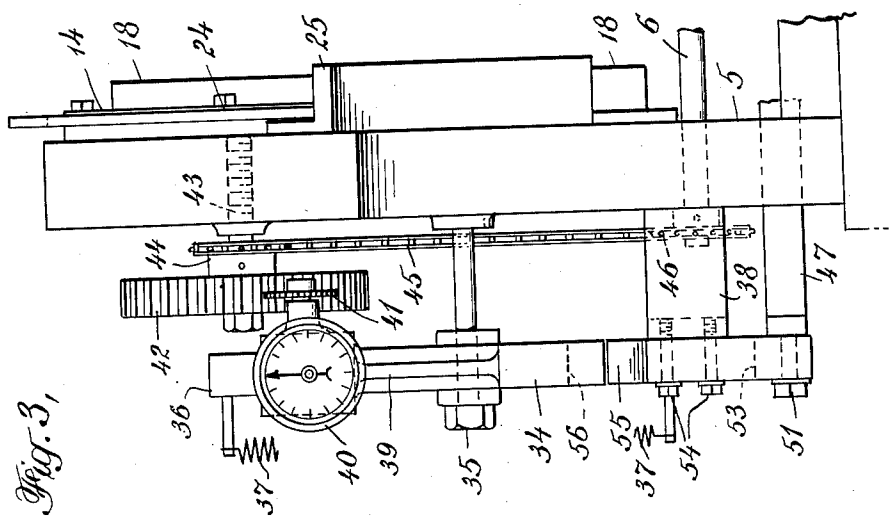


INVENTOR
Samuel Cohn
Jules G. Walter
BY
Pennie Davis Marvin & Edmonds
ATTORNEYS

Dec. 23, 1952 S. COHN ET AL 2,622,817

WINDING MECHANISM

Filed Dec. 13, 1945 4 Sheets-Sheet 4

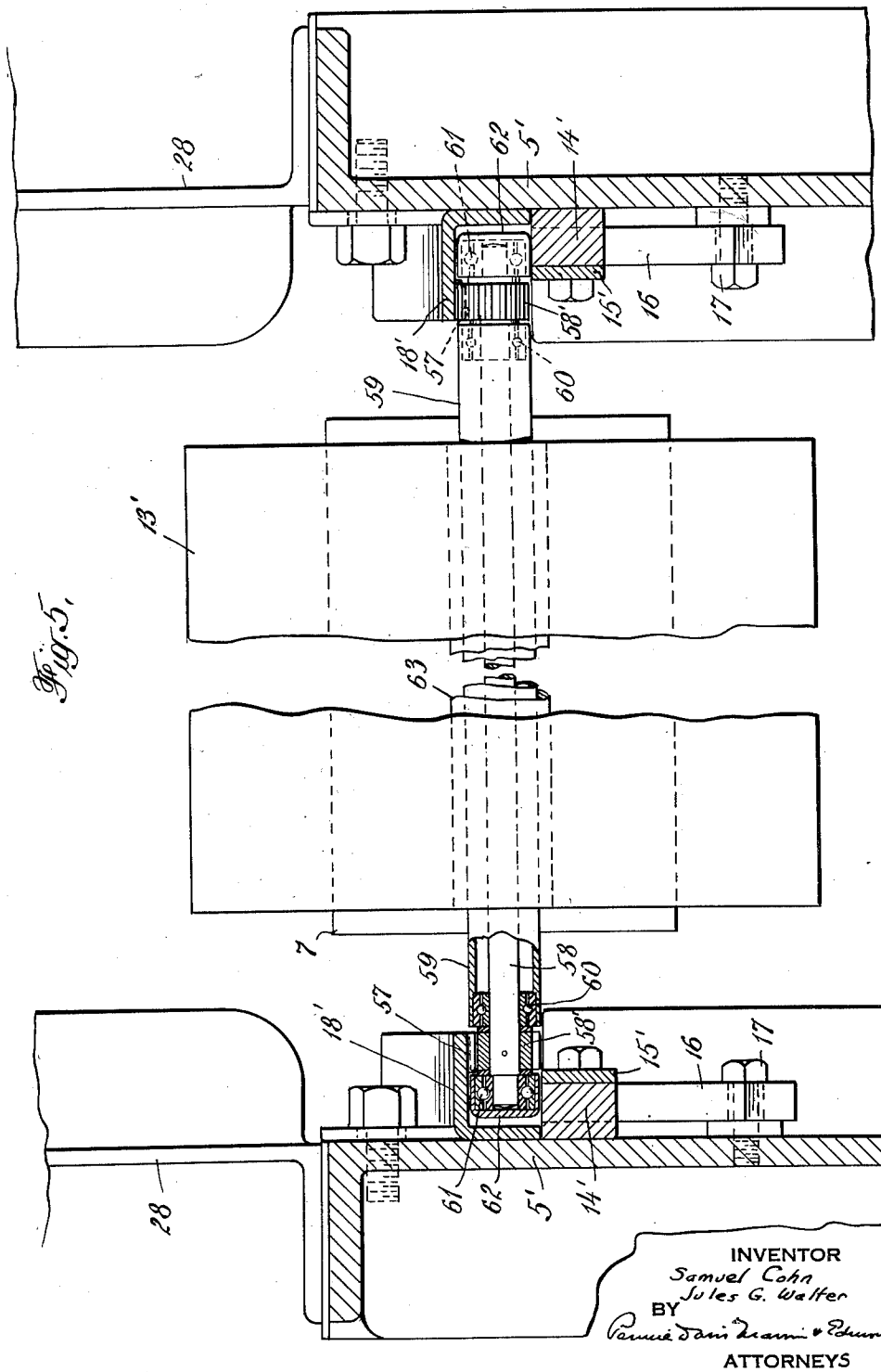


Fig. 5.

INVENTOR
Samuel Cohn
Jules G. Walter
BY
Pennie Davis Marvin & Edmonds
ATTORNEYS

Patented Dec. 23, 1952

2,622,817

# UNITED STATES PATENT OFFICE

2,622,817

## WINDING MECHANISM

Samuel Cohn, New York, and Jules G. Walter, Brooklyn, N. Y., assignors to Samcoe Holding Corporation, New York, N. Y., a corporation of New York

Application December 13, 1945, Serial No. 634,701

7 Claims. (Cl. 242—65)

1

This invention relates to an apparatus for winding lengths of fabric and for counting the yardage for each length as wound and more particularly to improvements in such apparatus whereby its functions are performed satisfactorily and accurately.

In handling and processing certain fabrics, it is the usual practice to stitch successive lengths together end to end. The number of lengths so assembled will vary, but is sufficient to make what is commonly termed a "batch" or a "beam." The treatment is usually completed by subjecting the material to a finishing operation which may include for example steaming and pressing with heated rolls.

It is necessary then to sever the several lengths or pieces of fabric at the seams where they are joined and to wind each piece separately on a hollow cardboard roll or other suitable support. The yardage must be accurately determined for each piece as it is wound. The machines heretofore available for these purposes have not been wholly satisfactory.

It is the object of the invention to provide a simple and satisfactory apparatus to facilitate the winding of lengths of fabric as they are severed from the batch or beam.

Another object of the invention is the provision of effective means ensuring accurate measurement of each length of fabric as it is wound.

Other objects and advantages of the invention will be apparent as it is better understood by reference to the following specification and the accompanying drawings, in which:

Fig. 1 is a longitudinal section through the machine embodying the invention;

Fig. 2 is a similar view indicating the method of operation of the machine;

Fig. 3 is a detail in elevation of the mechanism for counting the yardage;

Fig. 4 is an enlarged elevation of the means for severing the length of fabric at the seam;

Fig. 5 is an enlarged sectional view of a modified form of the apparatus; and

Fig. 6 is a detail in elevation illustrating a part of the apparatus as shown in Fig. 5.

Referring to the drawing, 5 indicates one of the side plates which, together with the plate on the opposite side of the machine, forms the frame thereof. A shaft 6 is journaled in the plates 5 and carries a roll 7 which is adapted to be rotated by any suitable driving mechanism such as a motor (not shown). The motor or other driving means is adapted to operate the roll 7 at, for example, the finishing speed of the fabric, preferably about forty yards per minute, and also at a "cut-off" speed of approximately five yards per minute. The precise speed is not important except that the "cut-off" speed should be sufficiently low to permit the operations as hereinafter described. The means for thus controlling the speed of operation of the machine is well known in the art and forms no part of the present invention.

2

The fabric 8, having a seam 9 therein, is delivered from the finishing apparatus (not shown) through a pair of rolls 10 to the roll 7 and is there engaged by and wound upon a hollow cardboard core 11 supported on a mandrel 12. As the material is wound, it forms a roll 13, the periphery of which engages the periphery of the roll 7, thereby effecting the winding operation.

In order to permit the mandrel 12 to rise as the roll 13 increases in diameter, guide bars 14 are secured to the plates 5 and near the bottom thereof are supplemented by bars 15 likewise secured to the plates 5 and slightly spaced therefrom to permit the operation of latches 16 pivoted at 17 on the plates 5. The latches 16 permit an extra mandrel 26 to move into position for peripheral contact with the roll 7 and prevent the mandrel from thereafter moving otherwise than upwardly between the bars 14 and 15 and flanges 18. The latter are supported on members 19 which are pivoted at 20 and which are normally held in the position indicated in Fig. 1 of the drawings by springs 21 secured at 22 and 23 to the plates 5. The members 19 carry angular extensions 24 which are adapted to engage guideways 25 secured to the plates 5 and to support the extra mandrel 26 while the roll 13 is being formed.

When the operator observes the seam 9 passing the rollers 10, he immediately reduces the speed of the apparatus by proper manipulation of the control mechanism to "cut-off" speed, thus causing the roll 7 to travel at a peripheral speed such that the operator may closely follow the seam 9 as it advances and perform the necessary severing operation. To effect this operation, the operator grasps the mandrel 12, draws it towards him and thereby moves the frame consisting of the members 19 about the pivots 20 to the position indicated in Fig. 2 of the drawing. Thereupon the roll 13 advances until the mandrel 12 engages depressions 27 in brackets 28 which are secured to the plates 5. The mandrel thus releases the members 19 which immediately return to normal position as indicated in Fig. 1 under the influence of the springs 21. At the same time, the spare mandrel 26 has been released and rolls

down the guideways 25 to engage the roll 7. The seam 9 continues to advance until it is in the position indicated in Fig. 2. Upon slight further advance, it reaches the position where the severing mechanism should be operated to sever the piece from the "beam." The operator takes up any slack in the fabric by turning the roll 13 manually.

The severing mechanism is mounted on the brackets 28 and is substantially the mechanism shown in the patent to Samuel Cohn, No. 1,745,476. It consists of channel members 29 extending transversely of the machine and a carriage supported on rollers 30 and 31 which engage the channel members. As shown in Fig. 4, the carriage carries a blade 32 which is adapted to engage the fabric as the latter is held against the channel members 29 by the rollers 30 and stretched across the upstanding flanges 32 of the channel members. The carriage is operated by grasping a transverse handle 33 at the top of the carriage and moving the carriage quickly across the width of the fabric. The severance should be effected close to the seam 9. The free end of the length of fabric on the already formed roll 13 drops downwardly, and the operator, quickly grasping the other free end near the seam 9, tosses it over the spare mandrel 26 which, at the moment, is rotating in engagement with the roll 7. Thereupon the operator increases the speed of the apparatus, and the winding of a new length commences. The finished roll 13 may be removed from the brackets 28 in preparation for delivery thereto of a new roll of fabric.

In order that the measurement of each length of fabric may be accomplished automatically, a swinging member 34 is pivotally mounted at 35 on the plate 5 at one side of the machine. It has an upstanding arm 36 which is connected by a spring 37 to a bracket 38 which is secured to the plate 5. The spring affords a toggle action, forcing the member 34 on one side or the other to the limit of its movement whenever the upper end of the arm 36 passes the center. The lateral arms 39 carry yardage counting devices 40. The details of these devices form no part of the invention, since they are well known in the art. Each carries a pinion 41, and the pinions are adapted to engage alternately with a gear 42 mounted on a stub shaft 43 supported by the plate 5. The gear 42 carries a sprocket 44 which is connected by a chain 45 to a sprocket 46 on the shaft 6. Thus the gear 42 is rotated at a speed corresponding to the travel of the fabric 8 past the roll 7, and the yardage of each piece is recorded by the yardage counter which at the time is actuated by the gear 42.

As each roll 13 travels onto the bracket 28, it depresses momentarily a lever 47 pivoted at 48 on the bracket and having an end 49 which projects upwardly in the path of the frame 19. The end of the lever 47 is connected to a member 50 by means of a pin 51 and slot 52. The member 50 is slotted at 53 to engage pins 54 on the bracket 38 and is adapted to be moved upwardly as the end 49 of the lever 47 is depressed. The upper end of the member 50 is beveled at 55 to engage a notch 56 on the member 34. Thus, as the member 50 is forced upwardly, it engages the notch 56 and forces the member 34 to one side or the other past the center, so that the spring 37 causes completion of the movement and engagement of one of the pinions 41 with the gear 42. Hence, as each roll 13 is completed and severed, the measurement of the yardage therein is completed and the other



yardage counter is moved into position to commence the count on the next roll. The operator then reads the yardage from the counter and resets the mechanism to zero for the next successive count. The operator is thus able to record accurately the yardage of each completed roll 13 as it is formed and severed from the "beam".

The above-described yardage-counting apparatus is fully described and claimed in our copending application Serial No. 286,396, filed May 6, 1952.

In winding certain types of fabrics and particularly knitted fabrics, it is not possible in ordinary apparatus to obtain a roll in which both ends have the same diameter. This difficulty is known in the trade as "taper" or "flowerpot wind-up."

This difficulty can be avoided in the present apparatus by providing the flanges 18 as shown in Fig. 6 with rack teeth 57. With the apparatus as so modified, it is necessary to use a different type of mandrel in place of the simple mandrel 12. This structure is clearly shown in Fig. 5, in which the plates 5' support bars 14' and extensions 15'. The flanges 18' carry the rack teeth 57 as shown.

The mandrel consists of a rod 58 carrying pinions 58' secured thereto at opposite ends and adapted to engage the rack teeth 57. A hollow tube 59 is supported on the rod 58 by ball bearings 60. Similar bearings 61 are mounted on the ends of the rod 58 and dust caps 62 are provided at the ends. The usual hollow pasteboard tube 63 is supported on the hollow tube 59 and the roll 13' is formed thereon as in the preceding description of the invention.

With the structure as shown in Fig. 5, any increase in the diametrical dimension of the roll 13' at either end thereof will cause the pinion 58' at that end to ride upwardly in the rack 57, thus causing the rod 58 to turn. Since the teeth of the racks 57 are in exact alignment, the turning movement of the rod 58 will necessarily lift the opposite end of the rod to the same extent, thus continuously compensating any variation in the diametrical dimensions at the opposite ends of the roll 13'. Hence it is impossible for the finished roll to be tapered. In normal operation, the hollow tube 59 rotates freely about the rod 58 and hence the roll 13' may be formed as the material 8 is fed to the machine. It is to be understood that with many types of material the rack and pinion construction as shown in Figs. 5 and 6 is unnecessary, since rolls of uniform diametrical dimensions can be produced readily without this improvement.

The apparatus as described permits the rapid and satisfactory winding of lengths of fabric which may be severed from the "beam" as each length is wound. The yardage is determined accurately as the winding proceeds, thus permitting the obtaining of satisfactory measurements of the product as it is completed.

Various changes may be made in the form, arrangement and construction of the apparatus without departing from the invention or sacrificing the advantages thereof.

We claim:

1. In a fabric winding mechanism, a frame, a driven roll in the frame, a mandrel adapted initially to engage the driven roll and to support a roll of fabric as it is formed, guideways for the mandrel each having stationary portions and substantially upright movable portions, the movable portions being pivoted below their centers of gravity on the frame and movable to release the roll of fabric, and resilient means to normally

hold the movable portions of the guideways in upright position and to return them to upright position after they have been moved to release the roll of fabric.

2. A fabric winding mechanism as set forth in claim 1 which includes means carried by the movable portions of the guideways to hold another mandrel in inoperative position until said portions of the guideways are moved from normal upright position.

3. A fabric winding mechanism according to claim 1 which includes latches associated with the guideways to hold the mandrel in operative position.

4. A fabric winding mechanism as set forth in claim 1 which includes means for severing the fabric positioned to engage the fabric when the movable portions of the guideways have been turned about their pivots and the roll of fabric has been released.

5. A fabric winding mechanism according to claim 1 which includes means carried by the movable portions of the guideways to hold another mandrel in inoperative position until said portions of the guideways are moved from normal upright position, and latches associated with the guideways to hold the mandrel in operative position.

6. A fabric winding mechanism according to claim 1 which includes means carried by the movable portions of the guideways to hold another mandrel in inoperative position until said portions of the guideways are moved from normal upright position, and means for severing the fabric positioned to engage the fabric when the movable portions of the guideways have been turned about their pivots and the roll of fabric has been released.



7. A fabric winding mechanism according to claim 1 which includes means carried by the movable portions of the guideways to hold another mandrel in inoperative position until said portions of the guideways are moved from normal upright position, latches associated with the guideways to hold the mandrel in operative position, and means for severing the fabric positioned to engage the fabric when the movable portions of the guideways have been turned about their pivots and the roll of fabric has been released.

SAMUEL COHN.
JULES G. WALTER.

## REFERENCES CITED

The following references are of record in the file of this patent:

UNITED STATES PATENTS

| Number | Name | Date |
|---|---|---|
| 1,000,167 | Friedmann | Aug. 8, 1911 |
| 1,353,661 | Mueller | Sept. 21, 1920 |
| 1,619,220 | Stocker | Mar. 1, 1927 |
| 1,620,044 | Stocker | Mar. 8, 1927 |
| 1,633,595 | Liebeck | June 28, 1927 |
| 1,635,024 | Baker | July 5, 1927 |
| 1,950,159 | Berry | Mar. 6, 1934 |
| 1,979,334 | Lyth | Nov. 6, 1934 |
| 1,986,680 | Marcalus | Jan. 1, 1935 |
| 2,010,891 | Raymond | Aug. 13, 1935 |
| 2,237,654 | Cohn et al. | Apr. 8, 1941 |

FOREIGN PATENTS

| Number | Country | Date |
|---|---|---|
| 664,242 | Germany | Aug. 23, 1938 |