US00D745928S

(12) United States Design Patent

Conway, Jr.

(10) Patent No.: US D745,928 S

(45) Date of Patent: ** Dec. 22, 2015

(54) **DISPLAY**

(71) Applicant: **Squire Boone Caverns, Inc.**, New Albany, IN (US)

(72) Inventor: **W. Frederick Conway, Jr.**, New Albany, IN (US)

(73) Assignee: **Squire Boone Caverns, Inc.**, New Albany, IN (US)

(**) Term: **14 Years**

(21) Appl. No.: **29/489,294**

(22) Filed: **Apr. 29, 2014**

(51) **LOC (10) Cl.** **20-02**

(52) **U.S. Cl.**
USPC **D20/35**

(58) **Field of Classification Search**
USPC D20/10, 19, 29–39, 41, 42, 99; D10/109.1, 109.2, 113.4; D6/404, 672, D6/674, 675; D11/163; D21/425, 540
CPC G09F 7/00; G09F 7/02; G09F 7/06; G09F 7/08; G09F 7/18; G09F 9/00; G09F 13/00; G09F 13/02; G09F 13/04; G09F 15/00; G09F 15/0012; G09F 15/0037; G09F 15/02; G09F 2013/044; G09F 2013/0454; G09F 2013/0481; G09F 17/00; G09F 19/00; G09F 19/22; G09F 21/00; G09F 21/02; G09F 23/00; G09F 23/0091
See application file for complete search history.

(56) **References Cited**

U.S. PATENT DOCUMENTS

395,317 A * 1/1889 Dubey G09F 13/04 40/557
D221,633 S 8/1971 Kotkowski
D240,544 S 7/1976 Howard
D251,403 S 3/1979 Bosler
D267,708 S * 1/1983 Boyakin D11/157
D321,437 S * 11/1991 Cheng D11/149
D360,753 S 8/1995 Willey
D389,535 S 1/1998 Schulz
D392,460 S 3/1998 Hung
D679,338 S * 4/2013 Ewringmann D21/425
D737,077 S * 8/2015 Cockayne D12/95

OTHER PUBLICATIONS

Silver Streak's Tumbled Stone Ore Car Attraction, www.silverstreakind.com/wholesale/Pages/page05.html, 1 page, Aug. 29, 2015.
Copyright Registration VA 699-938, "Ore Car Display and Game Cards", Aug. 27, 1994.
Copyright Registration VA 1-255-179 "Boulder Gem Display", Nov. 20, 2003.
Google Images, "Mining Ore Car", Search Results, Jun. 28, 2014, 2 pages.

* cited by examiner

Primary Examiner — Mary Ann Calabrese
(74) *Attorney, Agent, or Firm* — Berenato & White, LLC

(57) **CLAIM**

The ornamental design for a display, as shown and described.

DESCRIPTION

FIG. **1** is a front perspective view of my design;
FIG. **2** is a front elevational view;
FIG. **3** is a rear elevational view;
FIG. **4** is a left side elevational view;
FIG. **5** is a right side elevational view;
FIG. **6** is a top plan view; and,
FIG. **7** is a bottom plan view.

1 Claim, 6 Drawing Sheets

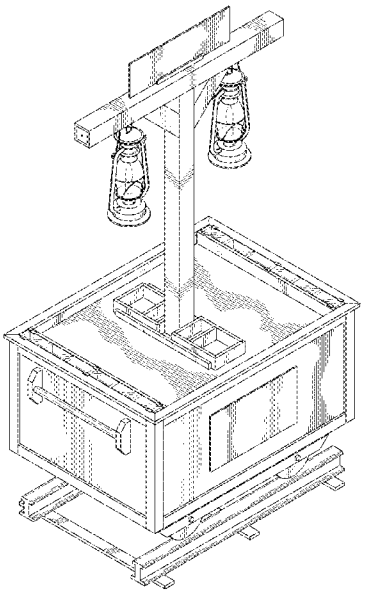

Fig. 1

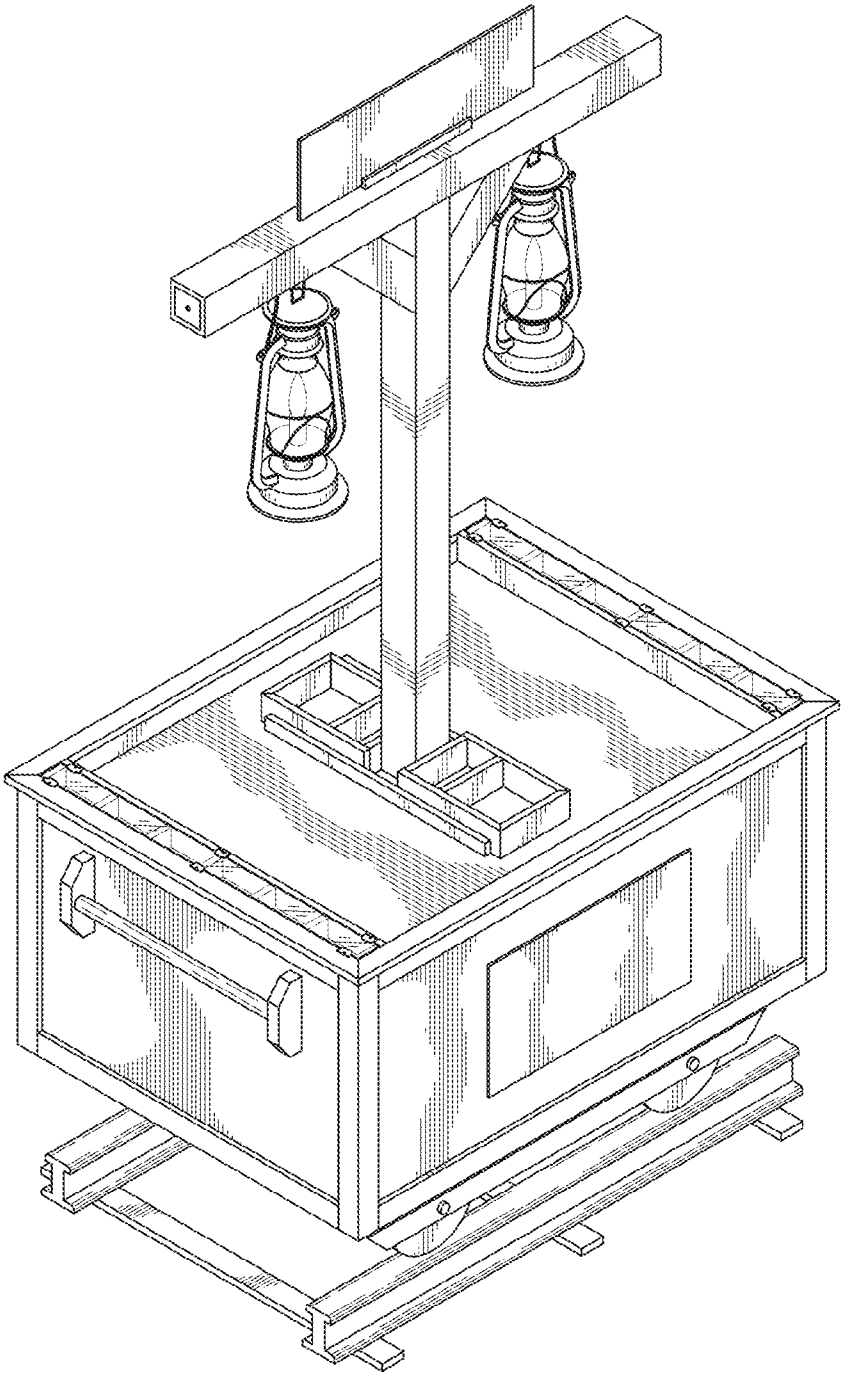

Fig. 2

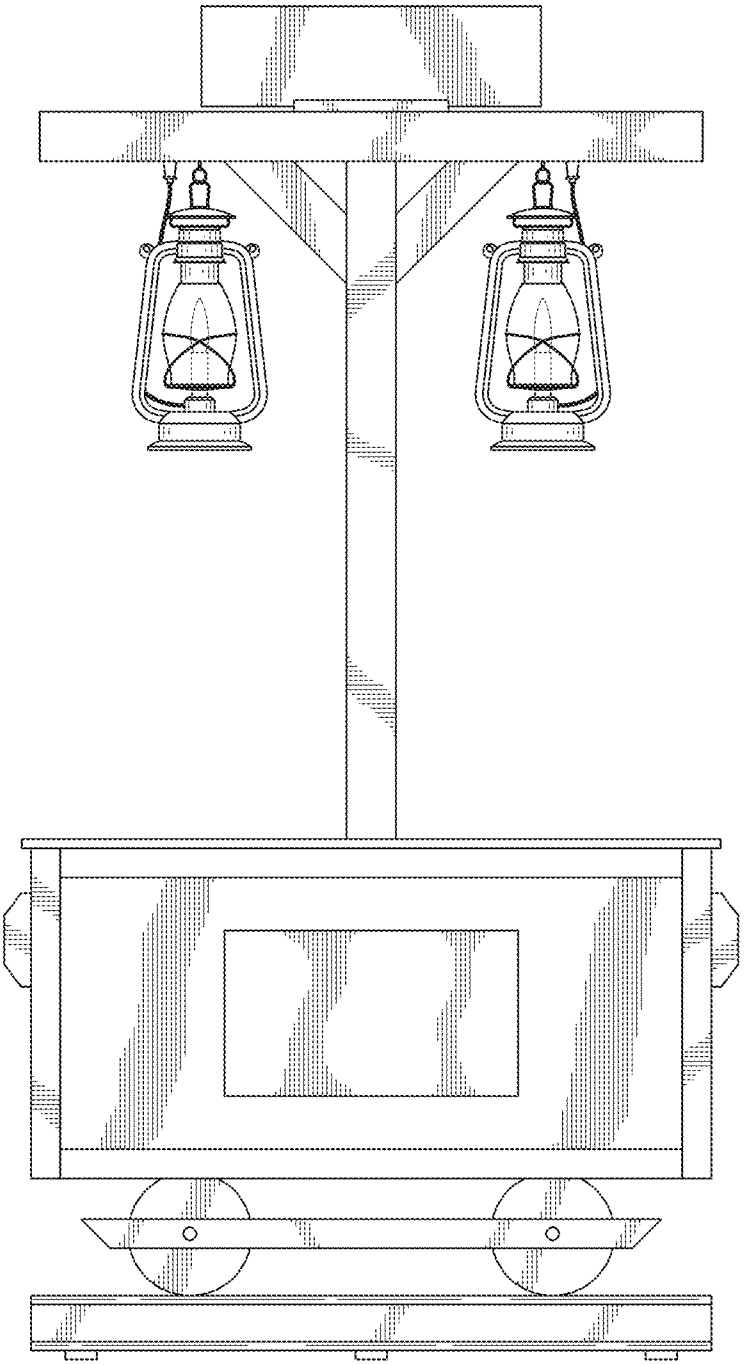

Fig. 3

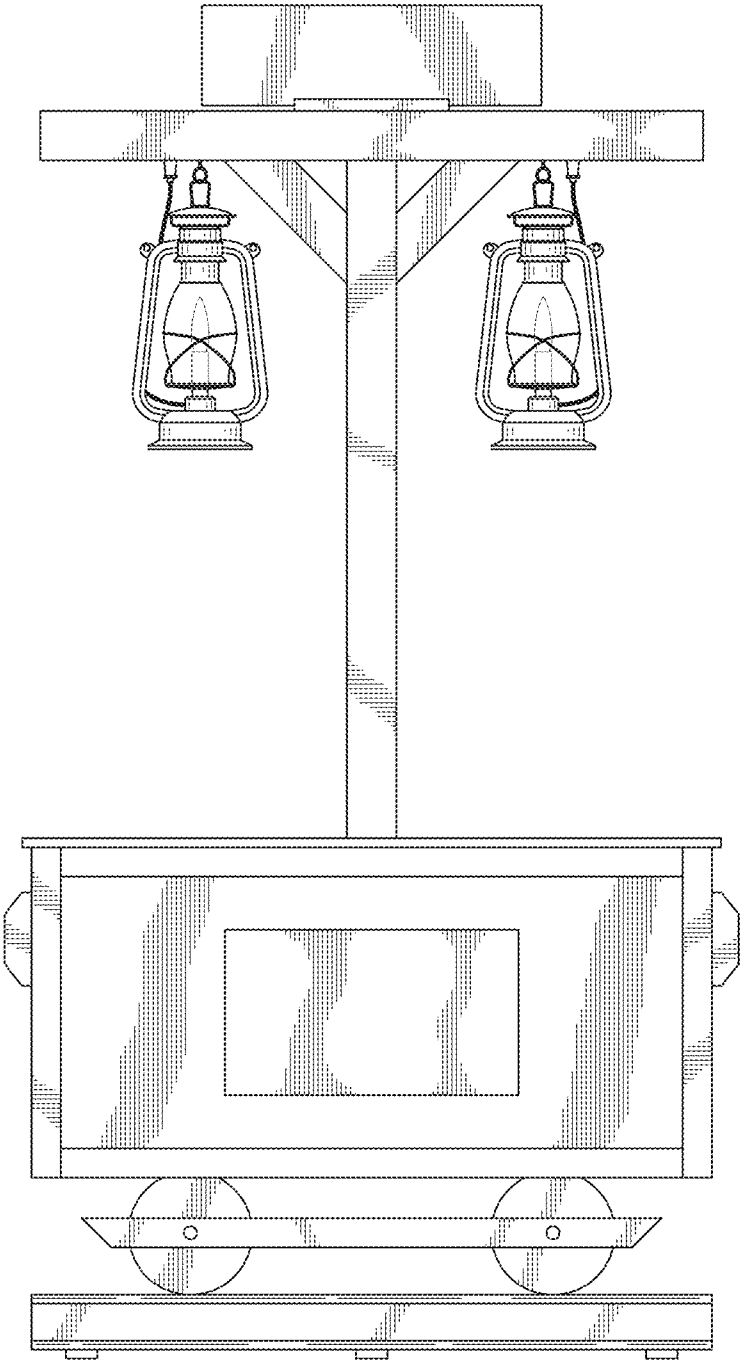

Fig. 4

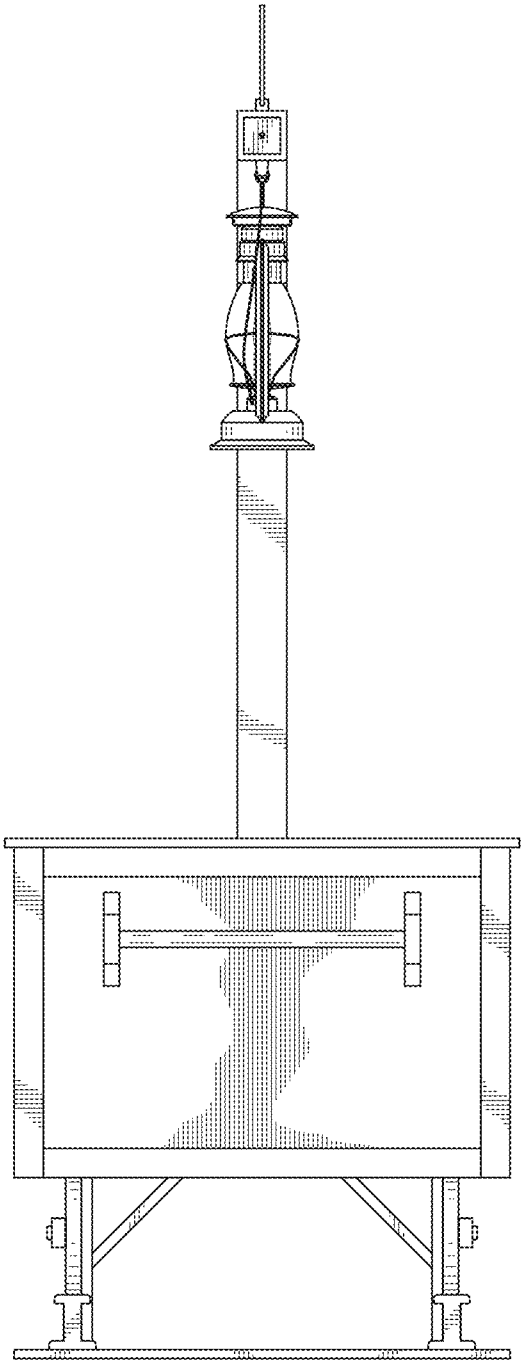

Fig. 5

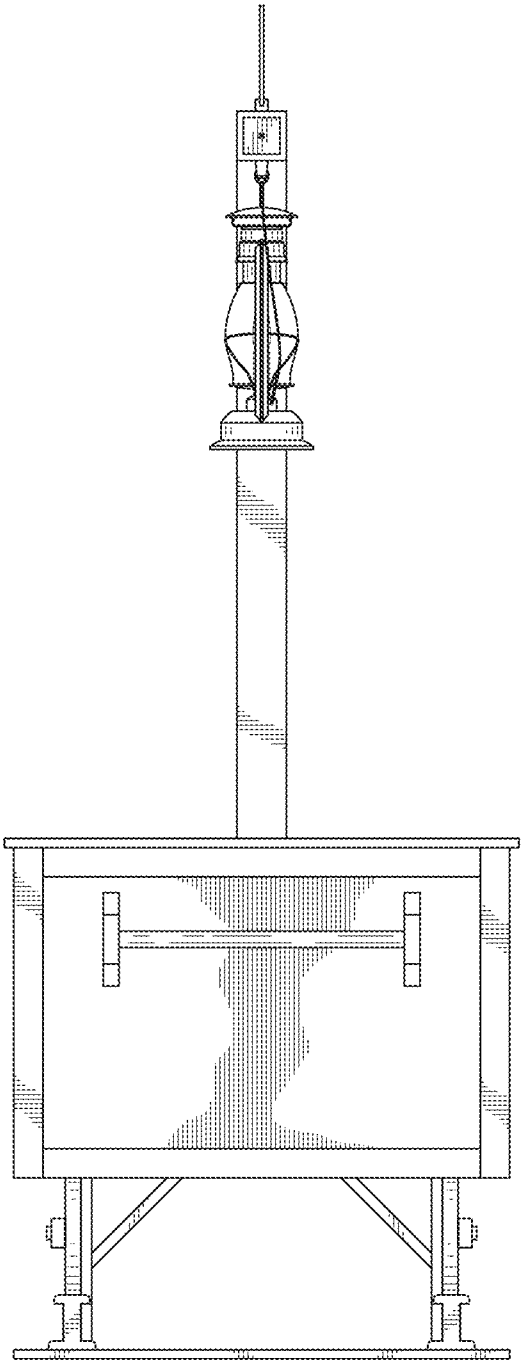

Fig. 6

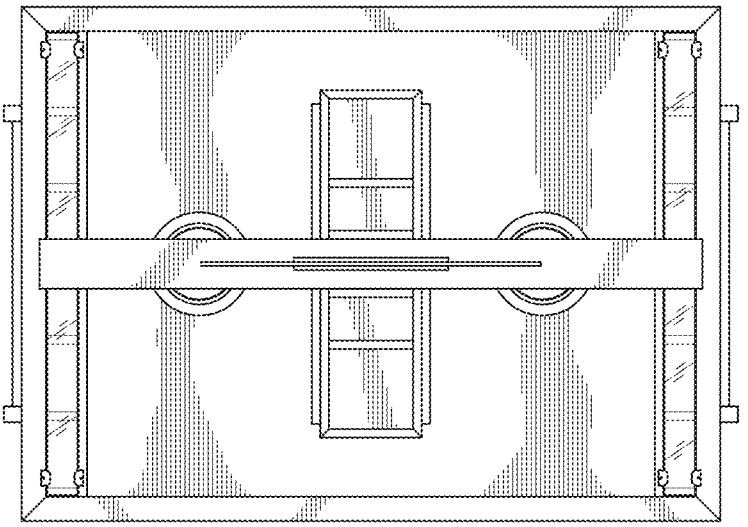
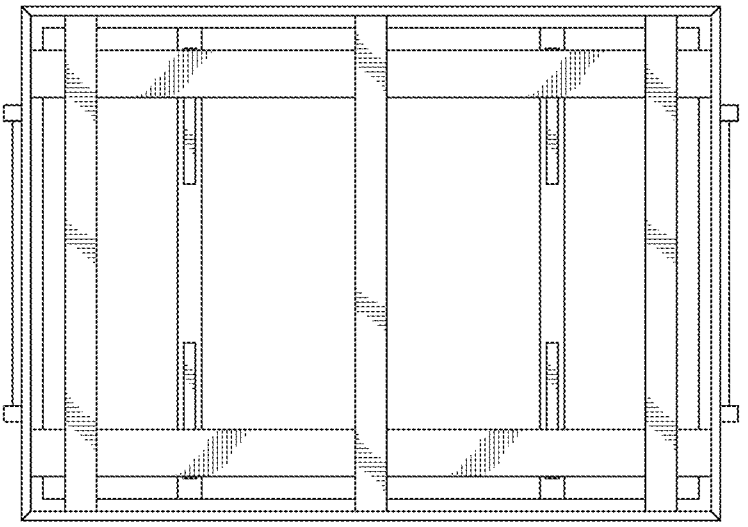
Fig. 7