Dec. 4, 1956 H. C. FRIEND 2,772,421

APPARATUS FOR HYDROTHERAPEUTIC TREATMENT

Filed April 19, 1954

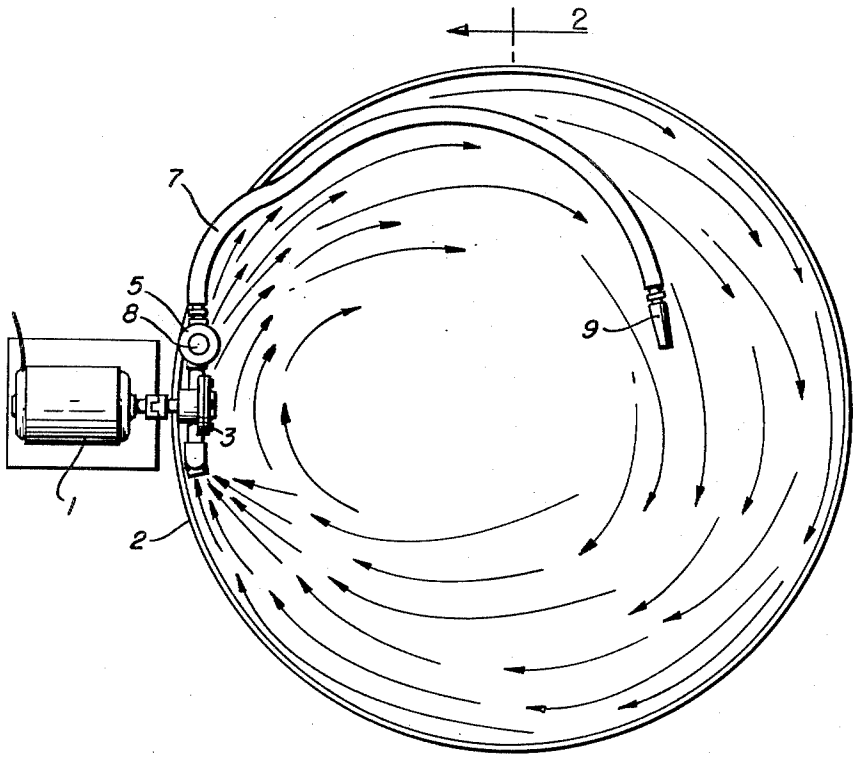

FIG. 1

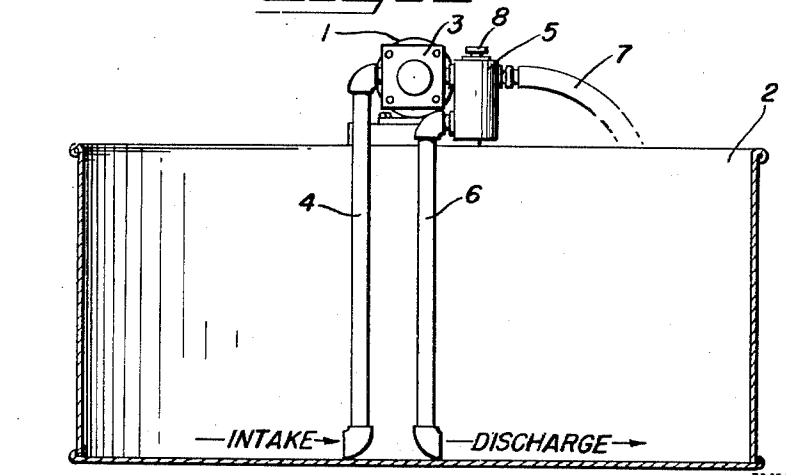

FIG. 2

INVENTOR.
HOMER C. FRIEND
BY
Merrill M. Blackburn
ATTORNEY

United States Patent Office 2,772,421 Patented Dec. 4, 1956

2,772,421

APPARATUS FOR HYDROTHERAPEUTIC TREATMENT

Homer C. Friend, Davenport, Iowa

Application April 19, 1954, Serial No. 424,054

4 Claims. (Cl. 4—178)

The present invention relates to apparatus for hydrotherapeutic treatment, and pasticularly concerns new means for distributing pressure in a tank in which hydrotherapeutic treatments are given.

In the drawings annexed hereto and forming a part hereof.

Fig. 1 is a plan view of the present structure; and

Fig. 2 represents a vertical section along the plane indicated by the line 2—2, in Fig. 1.

Reference will now be made in greater detail to the annexed drawings for a more complete description of this invention. A motor 1 is mounted on the edge of a tank 2, or it may be placed on the floor or in any other convenient location. A pump 3 may be located on the edge of the tank 2, or elsewhere, as desired. For example, a bracket may be mounted on the edge of the tank, and a shelf may be carried by the bracket. Also, the motor 1 and the pump 3 may be mounted thereon. An inlet pipe 4 may lead from the bottom of the tank 2 to the pump 3 from which is an outlet pipe 6 to discharge into the control valve 5 to cause circulation of the water which may be applied to the person taking treatment. Water may be discharged either through the outlet pipe 6 or the pipe 7 which is preferably a hose and the water can be shot against any particular part of the body by a nozzle 9. The flow of water is controlled by a valve 8 which may be of the type shown in my Patent No. 2,669,233, issued February 16, 1953, or any other desirable flow control valve. Since the intake and the discharge are in the same direction, the flow of water will necessarily have a whirling or whirlpool motion. The purpose of the valve 8 is to regulate the pressure and volume of the water delivered. It will be understood that this may be a portable pump since it may be used in various locations and with various

water containers. For example, a tank several feet in length may be used and may have a hose with several outlets along the length thereof, or a pipe of any suitable material may be located exteriorly of the tank and have two or more outlets to the tank.

It is of course understood that the specific description of structure set forth above may be departed from without departing from the spirit of this invention as disclosed in this specification and as defined by the appended claims.

Having now described my invention, I claim:

1. In apparatus for hydrotherapeutic treatment, a tank in which the treatment is given, said tank having upright wall portions, a pump to force a stream of water against a person taking a treatment, a motor for operating the pump at a desired speed, a bracket to support the pump and motor on the upper edge of one wall portion of the tank, said bracket being constructed so that the motor is located in laterally outwardly overhanging relation to said one wall portion and the pump is located in laterally inwardly overhanging relation to said one wall portion, and inlet and outlet pipes extending from the pump downwardly to within the tank in close proximity to said one wall portion to intake and discharge ends, respectively, adjacent the bottom of the tank.

2. In aparatus as set forth in claim 1, further characterized by a valve connected with said pump and supported in laterally inwardly overhanging relation to said one wall portion, said valve having a first outlet connected to the upper end of said outlet pipe and further having a second outlet including a flexible hose having a discharge end selectively positionable within or exteriorly of said tank.

3. In apparatus as set forth in claim 2, further characterized by said second outlet being located at a point above the upper part of said wall portion so as to facilitate said selective positioning of the hose.

4. In apparatus as set forth in claim 1, in which: the intake end of the inlet pipe and the discharge end of the outlet pipe respectively include elbows turned oppositely away from each other.

References Cited in the file of this patent

UNITED STATES PATENTS

2,091,167	Solley	Aug. 24, 1937
2,555,686	Farrelly et al.	June 5, 1951
2,575,636	Patch	Nov. 20, 1951
2,591,252	Gilson	Apr. 1, 1952