(12) INTERNATIONAL APPLICATION PUBLISHED UNDER THE PATENT COOPERATION TREATY (PCT)

(19) World Intellectual Property Organization
International Bureau

(43) International Publication Date
04 June 2020 (04.06.2020)

WIPO | PCT

(10) International Publication Number
WO 2020/112712 A1

(51) International Patent Classification:
B01D 61/42 (2006.01) *B01D 61/58* (2006.01)
B01D 53/26 (2006.01)

(21) International Application Number:
PCT/US2019/063157

(22) International Filing Date:
26 November 2019 (26.11.2019)

(25) Filing Language: English

(26) Publication Language: English

(30) Priority Data:
16/200,376 26 November 2018 (26.11.2018) US
16/378,769 09 April 2019 (09.04.2019) US

(71) Applicant: **PALO ALTO RESEARCH CENTER INCORPORATED** [US/US]; Office of General Counsel, Intellectual Property Law Department, Attn: IP Documentation Center, 800 Phillips Road, MS 105-20C Webster, New York 14580 (US).

(72) Inventors: **BEH, Eugene S.**; 192 Lucero Way, Portola Valley, California 94028 (US). **BENEDICT, Michael**; 169 Alma Street, Palo Alto, California 94301 (US). **KARATAY, Elif**; 1 Morning Sun Court, Mountain View, California 94043 (US). **RIVEST, Jessica Louis Baker**; 1754 Emerson Street, Palo Alto, California 94301 (US).

(74) Agent: **DOTTER, Tracey** et al.; MUETING, RAASCH & GEBHARDT, P. A., 111 Washington Avenue South, Suite 700, Minneapolis, Minnesota 55401 (US).

(81) Designated States *(unless otherwise indicated, for every kind of national protection available)*: AE, AG, AL, AM, AO, AT, AU, AZ, BA, BB, BG, BH, BN, BR, BW, BY, BZ, CA, CH, CL, CN, CO, CR, CU, CZ, DE, DJ, DK, DM, DO, DZ, EC, EE, EG, ES, FI, GB, GD, GE, GH, GM, GT, HN, HR, HU, ID, IL, IN, IR, IS, JO, JP, KE, KG, KH, KN, KP, KR, KW, KZ, LA, LC, LK, LR, LS, LU, LY, MA, MD, ME,

(54) Title: ELECTRODIALYTIC SYSTEM USED TO REMOVE SOLVENT FROM FLUID AND NON-FLUID FLOWS

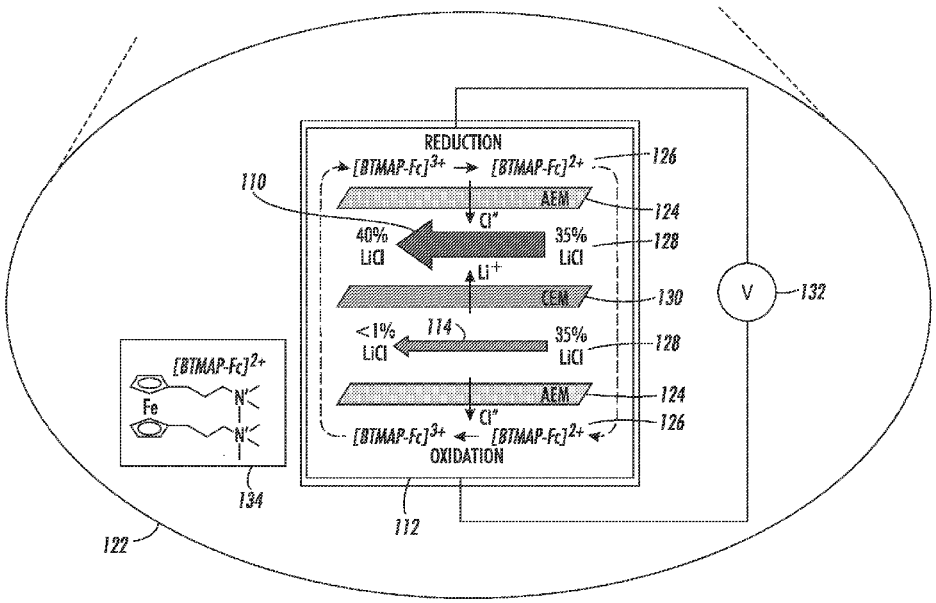

FIG. 1A

(57) Abstract: A system includes an electrodialysis device with a salinate chamber through which a salinate stream flows. A desalinate chamber is separated from the salinate chamber by a central, ion-selective membrane. A desalinate stream flows through the desalinate chamber. An anolyte chamber and a catholyte chamber are on opposite outer sides of the salinate and desalinate chambers and separated therefrom by first and second ionic exchange membranes. A solvent exchange interface is in contact on a first side with the salinate stream and is in contact a media flow on a second side. The solvent exchange interface moves a solvent from the media flow to the salinate stream.

[Continued on next page]

WO 2020/112712 A1

MG, MK, MN, MW, MX, MY, MZ, NA, NG, NI, NO, NZ, OM, PA, PE, PG, PH, PL, PT, QA, RO, RS, RU, RW, SA, SC, SD, SE, SG, SK, SL, SM, ST, SV, SY, TH, TJ, TM, TN, TR, TT, TZ, UA, UG, US, UZ, VC, VN, ZA, ZM, ZW.

(84) **Designated States** *(unless otherwise indicated, for every kind of regional protection available)*: ARIPO (BW, GH, GM, KE, LR, LS, MW, MZ, NA, RW, SD, SL, ST, SZ, TZ, UG, ZM, ZW), Eurasian (AM, AZ, BY, KG, KZ, RU, TJ, TM), European (AL, AT, BE, BG, CH, CY, CZ, DE, DK, EE, ES, FI, FR, GB, GR, HR, HU, IE, IS, IT, LT, LU, LV, MC, MK, MT, NL, NO, PL, PT, RO, RS, SE, SI, SK, SM, TR), OAPI (BF, BJ, CF, CG, CI, CM, GA, GN, GQ, GW, KM, ML, MR, NE, SN, TD, TG).

Declarations under Rule 4.17:

— *as to applicant's entitlement to apply for and be granted a patent (Rule 4.17(ii))*

— *as to the applicant's entitlement to claim the priority of the earlier application (Rule 4.17(iii))*

Published:

— *with international search report (Art. 21(3))*

ELECTRODIALYTIC SYSTEM USED TO REMOVE SOLVENT FROM FLUID AND NON-FLUID FLOWS

SUMMARY

[0001] The present disclosure is directed to an electrodialytic system used to remove water from fluid and non-fluid flows. In one embodiment, a system includes an electrodialysis device with a salinate chamber through which a salinate stream flows. A desalinate chamber is separated from the salinate chamber by a central, ion-selective membrane. A desalinate stream flows through the desalinate chamber. An anolyte chamber and a catholyte chamber are on opposite outer sides of the salinate and desalinate chambers and separated therefrom by first and second ionic exchange membranes. Ion transport between the anolyte and catholyte chambers is driven by faradaic reactions induced by a voltage applied across the anolyte and catholyte chambers. A solvent exchange interface is in contact on a first side with the salinate stream and is in contact a media flow on a second side. The solvent exchange interface moves a solvent from the media flow to the salinate stream.

[0002] These and other features and aspects of various embodiments may be understood in view of the following detailed discussion and accompanying drawings.

BRIEF DESCRIPTION OF THE DRAWINGS

[0003] The discussion below makes reference to the following figures, wherein the same reference number may be used to identify the similar/same component in multiple figures. The drawings are not necessarily to scale.

[0004] FIGS. 1 and 1A are diagrams of a liquid desiccant system according to an example embodiment;

[0005] FIG. 2 is a perspective view of an air conditioning system according to an example embodiment;

[0006] FIG. 3 is a block diagram of an air conditioning system according to an example embodiment;

[0007] FIG. 4 is a diagram of a liquid desiccant system according to an example embodiment;

[0008] FIGS. 5A and 5B are diagrams of electrodialytic stacks according to example embodiments;

[0009] FIG. 6 is a diagram of a heat exchanger used with an air-liquid interface according to an example embodiment;

[0010] FIG. 7 is a diagram of a multi-stage electrodialytic stack according to an example embodiment;

[0011] FIG. 8 is a flowchart of a method according to an example embodiment;

[0012] FIGS. 9 and 10 are diagrams of electrodialysis devices according to additional example embodiments;

[0013] FIG. 11 is a diagram of a system used to remove solvent from various fluids and non-fluids according to an example embodiment; and

[0014] FIG. 12 is a flowchart of a method according to another example embodiment.

DETAILED DESCRIPTION

[0015] The present disclosure relates to liquid desiccant systems. A liquid desiccant system may be used in, among other things, heating, ventilation, and air-conditioning (HVAC). Air conditioning is responsible for nearly 10% of U.S. electricity consumption, with dehumidification accounting for more than half of the load in humid regions. The present disclosure describes an efficient thermodynamic approach to dehumidification for air conditioning. Generally, a system includes a membrane dehumidifier in tandem with a redox-assisted electrodialysis liquid desiccant concentrator.

[0016] The systems described herein take advantage of a redox-assisted electrodialysis process that enables a membrane-based liquid desiccant air conditioning system. In this redox-assisted electrodialysis (ED) process, an aqueous solution of a redox-active species is circulated between the anode and cathode of an electrochemical stack to concentrate ionic solutions, eliminating thermodynamic phase changes driven by heat or

pressure necessary for vapor compression (VC) or desiccant based air conditioning. Liquid desiccants (e.g., aqueous solutions of lithium chloride, LiCl) will absorb moisture from air across a membrane interface. Diluted liquid desiccants will be efficiently re-concentrated, avoiding the latent heat input required to evaporate water. It is estimated that the enhanced efficiency of this new proposed cycle leads to 1.5 Quads of energy savings yearly by 2030.

[0017] In FIG. 1, a diagram illustrates an electrodialytic liquid desiccant air conditioning (ELDAC) system 100 according to an example embodiment. The system 100 includes a desiccant section 102 and a cooling section 104. In the desiccant section 102, outdoor air 106 (and/or recirculated air) is forced across a liquid-carrying membrane dryer 108, also referred to herein as an air-liquid interface. The air 106 may be outside air of high temperature and high relative humidity (RH). Water 109 from the air 106 is absorbed at the membrane interface 108 into a concentrated liquid desiccant 110, e.g., of aqueous LiCl, is then passed through a redox-assisted regenerator 112 to separate dilute stream 114 (e.g., discharge water) and re-concentrate the desiccant stream 110. Other concentrates may be used for the desiccant instead of LiCl, e.g., NaCl, LiBr, and $CaCl_2$.

[0018] The humidity is reduced in the air 115 leaving the desiccant section 102, wherein it is cooled by the cooling section 104. This cooling section 104 may include an evaporator 116 and other components not shown (e.g., condenser, compressor). Because the air 115 entering the cooling section 104 has lower relative humidity compared to the outside/recirculated air 106, the evaporator 116 is more efficient and can reduce the temperature of the cooled air 120 by a greater amount than if the evaporator 116 had to also condense moisture from the incoming air 115. Experimental results measuring the energy used by redox-assisted electrodialysis to concentrate ionic aqueous solutions show that ELDAC system 100 can have a regeneration specific heat input (RSHI) less than 0.05 kBTU/lb, which is up to 30 times lower than currently used thermal regeneration methods.

[0019] As seen in the detail view 122 of FIG. 1A, redox-assisted regenerator 112 has two outer ion exchange membranes 124 that separate the outer redox channels 126 from the inner concentrate 110 and dilute 114 streams. In this example the outer ion exchange membranes 124 are configured as anion exchange membranes (AEM). The concentrate 110 and dilute 114 streams are separated by a central ion exchange membrane

130, which in this example is a cation exchange membrane (CEM). In other configurations, the central ion exchange membrane 130 may be an AEM and the outer membranes 124 may be CEMs.

[0020] An external voltage 132 induces oxidation or reduction in redox-active shuttle molecules, driving ion movement across the membranes 124, 130 without splitting water or producing other gaseous by products (e.g. chlorine) and creating two streams: re-concentrated desiccant 110 and discharge water 114. This goal can be achieved over multiple stages. One proposed redox shuttle is a positively charged ferrocene derivative such as (bis(trimethylammoniopropyl)ferrocene/ bis(trimethylammoniopropyl) ferrocenium, $[BTMAP\text{-}Fc]^{2+}$/$[BTMAP\text{-}Fc]^{3+}$) 134, which is non-toxic, highly stable, has very rapid electrochemical kinetics and negligible membrane permeability. Other redox shuttle solutions may include ferrocyanide/ferricyanide ($[Fe(CN)_6]^{4-}$/$[Fe(CN)_6]^{3-}$) or a negatively charged ferrocene derivative. The moving parts of the system may include low pressure pumps for liquid circulation and fans for air circulation. Additional details of this type of four-channel, electrodialytic, stack with redox shuttle assist can be found in commonly-owned U.S. Patent Application 16/200,289 (Attorney docket number 20171214US03 / PARC.225U1), which is hereby incorporated by reference in its entirety.

[0021] In FIG. 2, a perspective view shows details of an ELDAC system 200 according to an example embodiment. In FIG. 3, a block diagram shows functional relations between some of the components shown in FIG. 2, as well as showing other components according to additional embodiments. The system 200 includes an enclosure 202 that holds various functional components and provides air duct paths. Humidified air 214 (e.g., outside and/or return air) is directed through a first duct 220 via an air blower 212. This air 214 is forced across an air-liquid interface dehumidifier 206. In this example, the dehumidifier 206 is configured as a rectangular membrane element that fills the first duct 220.

[0022] Within a frame 206a of the dehumidifier 206 are one or more planar membranes 206b through which liquid desiccant is circulated. In other embodiments, hollow tube, liquid-to-air surfaces, liquid spray, may be used in the dehumidifier 206 instead of or in addition to a planar membrane 206b. Movement of the fluid desiccant through the membrane 206b may be accomplished using any combination of capillary

action, gravity feed, direct pumping of the liquid, etc. A grill 206c may be provided for mechanical support of the membrane 206b to reduce flexing caused by air pressure from air flow 214. A liquid pump 207 is used to move the liquid desiccant from an optional storage tank 210 to the membrane dehumidifier 206, where it absorbs water from the air 214 and is fed back to a redox-assisted regenerator 208. The redox-assisted generator 208 separates water from the liquid desiccant, where the separated water is discharged via a drain 209. Note that while the components 207, 208, 210 and associated piping are shown outside the enclosure 202 for convenience of illustration, they may be partially or fully located within the enclosure 202.

[0023] The air 216 that has passed through the membrane dehumidifier 206 has low RH and so can be more efficiently processed by a sensible heat remover 204, e.g., an evaporator of a refrigerant-cycle air conditioner. The cooled air 218 that has passed through the sensible heat remover 204 passes through supply duct 220 where it exits the enclosure 202 and is used to cool a target space, e.g., building, vehicle, etc.

[0024] Note that in FIG. 3, a redox storage tank 300 is shown in fluid communication with the LD regenerator 208. The ELDAC system 200 may include one or both of the redox and desiccant reservoirs 300, 210. Note that the desiccant storage 210 may store fluid for both the concentrate stream and dilute stream (e.g., streams 110 and 114 in FIG. 1), by using separate reservoirs or a single reservoir with two or more partitions. The redox storage 300 may similarly store concentrated and dilute parts of the redox stream (e.g., bottom and top parts of stream 126 shown in FIG. 1). These reservoirs 210, 300 may be used as buffers in some embodiments. For example, if the water draining from the ELDAC system 200 does not equal the water being absorbed from the air, one of concentrated or diluted desiccant (or a combination of both) may be drawn from the reservoir 210 to ensure the desiccant loop maintains the desired concentrate levels and/or flow rates.

[0025] The reservoirs 210, 300 may be of sufficient capacity to be used for other purposes besides dehumidification. For example, as is described in U.S. Patent Application 16/200,289 (Attorney docket number 20171214US03 / PARC.225U1), an electrodialytic battery 302 may use the redox solutions 300 to generate electricity, thus recovering some of the electricity used in dehumidification. Such processes may be run

together with or separately from dehumidification. For example, electricity generation may occur at night when the system is lightly utilized or shut off.

[0026] In FIG. 4, a diagram shows additional details of a liquid desiccant system according to an example embodiment. An electrodialytic stack 400 provides an enclosure for a liquid desiccant loop 402 and a redox shuttle loop 404. The loops 402, 404 are separated within the housing 400 by outer exchange membranes 406 and diluted/concentrate paths 402a, 402b of the liquid desiccant loop 402 are separated by a central exchange membrane 408. The fluids in the loops 402, 404 are driven by pumps 412, 410, respectively.

[0027] The liquid desiccant loop 402 starts with concentrated liquid desiccant at point 402c. The desiccant loop 402 includes an aqueous ionic solution such as lithium chloride in water. Typical starting concentrations will be ~30% desiccant by weight. The concentrated desiccant solution is brought into contact with an air-to-membrane interface/exchanger 414, such as the membrane dehumidifier 206 shown in FIGS. 2 and 3. At the exchanger 414, higher RH air 416 enters and lower RH air 418 leaves. Water vapor 420 from the air is pulled across a water selective membrane 422 (or other liquid-air interface) at the exchanger 414 by the desiccant thereby diluting the desiccant solution which exits at a lower concentration at point 402d.

[0028] At the electrodialytic stack 400, the lower concentration liquid desiccant solution 402d is split at junction 402e split into separate streams 402a, 402b that are brought into contact with the membranes 406, 408of the stack 400. Stream 402b is concentrated as it passes through the stack 400 and reenters the pump 412 having the same concentration as point 402c. The other stream 402a is diluted as it passes through the stack 400 and leaves as a highly diluted stream of water which can be drained, stored, or used for some other purpose.

[0029] The pump 410 circulates the redox shuttle between points 404a and 404b, whereupon it comes into contact with electrodes 424. A voltage 426 applied across the electrodialytic stack drives ions from stream 402a to stream 402b, from stream 402a into stream 404b, and from stream 404a into stream 402b. In each case, driving the ions through the membranes 406, 408 affects the concentration. An alternate embodiment of an electrodialytic stack 500 is shown in FIG. 5A using LiCl as the desiccant concentrate and

$[BTMAP\text{-}Fc]^{2+}/[BTMAP\text{-}Fc]^{3+}$ as the redox shuttle. The LiCl desiccant concentrate is split into a desalinate/diluted stream and a concentrated stream 504 by a central ionic exchange membrane 506, in this case a CEM. A redox shuttle loop 508 has first and second redox streams 508a-b separated from the diluted stream and the concentrated stream of the liquid desiccant loop by respective first and second outer ionic exchange membranes 507, 509 of a different type (in this case an AEM) than the central ionic exchange membrane 506.

[0030] Another alternate embodiment of an electrodialytic stack 510 is shown in FIG. 5B using LiCl as the desiccant concentrate and $[Fe(CN)_6]^{4-}/[Fe(CN)_6]^{3-}$ as the redox shuttle. The LiCl desiccant concentrate is split into a desalinate/diluted stream and a concentrated stream 514 by a central ionic exchange membrane 516, in this case an AEM. A redox shuttle loop 518 has first and second redox streams 518a-b separated from the diluted stream and the concentrated stream of the liquid desiccant loop by respective first and second outer ionic exchange membranes 517, 519 of a different type (in this case a CEM) than the central ionic exchange membrane 516. Note that the electrodialytic stacks 500, 510 shown in FIGS. 5A and 5B can be used in any of the dehumidification loops shown herein.

[0031] The dehumidification part of the above-described system requires only input electricity for driving pumps and the electrodialytic stack as well as an input air stream to be dehumidified. There will be outlet streams of water and low RH air. The system is intended for use for dehumidification, although it may be adapted for additional uses, e.g., generating electricity from stored redox solution. A benefit is provided because ELDAC requires significantly less energy than existing dehumidification systems due to the use of electrodialytic concentration at zero or near-zero overpotential. Because the system does not rely on water splitting to drive ion motion, ELDAC does not generate any toxic or flammable gases (e.g. chlorine or hydrogen) when used on concentrated salt solutions unlike other electrochemical processes like conventional electrodialysis. An example application could be using ELDAC upstream from a normal air conditioner to eliminate the latent heat load to the air conditioner and lower air conditioning bills.

[0032] The absorption of the moisture in the liquid desiccant is exothermic, such that it will increase the temperature of the air-liquid interface that carries the liquid

desiccant. This increase in temperature could result in increased loads on a sensible cooling section that receives air that passes through the air-liquid interface. In FIG. 6, a diagram shows a system for removing heat from an air-liquid interface 600 according to an example embodiment. A heat exchanger 602 is thermally coupled to heat transfer elements 604 that are distributed through parts (e.g., the membrane) of the interface 600.

[0033] The heat transfer elements 604 may be conductive strips (e.g., metals, carbon nanotubes, etc.), gas-filled or liquid-filled passive heat pipes (e.g., thermosiphon), tubes through which a gas or liquid is pumped, radiative heat absorbers, or other heat-carrying structures known in the art. The heat carried through elements 604 is delivered to the heat exchanger 602, which is subjected to a cooling flow 606. The cooling flow 606 is a gas or liquid flow that carries heat away from the heat exchanger 602 and ultimately may dump the heat to an ambient heat sink (e.g., air, soil, water). In other embodiments, the heat 608 may be transferred (e.g., along heat transfer path 610) to other heat sinks, such as an electrodialytic stack 612 (which may be the same stack that provides desiccant to the interface 600 or a different stack) and/or the discharge water 614 from the system (e.g., discharge water 114 in FIG. 1).

[0034] In the previous example, an electrodialytic stack included a single redox loop. In other embodiments, a stack may include multiple redox loops and associated ionic membranes to further increase the level of dilution/concentration and/or to increase the amount of desiccant flow that can be treated. In FIG. 7, a block diagram shows a dual-stage electrodialytic stack 700 according to an example embodiment.

[0035] The electrodialytic stack 700 processes a liquid desiccant loop 702 that is split into a diluted stream 702a and a concentrated stream 702b that passes through a first stage 704. Stream 702a exiting stage 704 is further split into a second diluted stream 702d and a second concentrated stream 702e that passes through a second stage 706. Stream 702e exiting stage 706 is at a lower concentration than stream 702b exiting stage 704 and can be remixed with output stream 702c and reintroduced to the previous stage 704 instead of being remixed with 702b and reintroduced to the air-liquid interface 708. To maximize efficiency, the desiccant concentrations in streams 702c and 702e are about equivalent (e.g., within 0-20%).

[0036] Each of the stages 704, 706 has a central ionic exchange membrane 704a, 706a that separates the diluted streams 702a, 702d and the concentrated streams 702b, 702e. Each of the stages 704, 706 has a redox shuttle loop 704b, 706b with first and second redox streams 704ba, 704bb, 706ba, 706bb separated from the diluted streams 702a, 702d and the concentrated streams 702b, 702e of the liquid desiccant loop 702 by respective first and second outer ionic exchange membranes 704c, 704d, 706c, 706d. The stages 704, 706 each include first and second electrodes 704e, 704f, 706e, 706f that are operable to apply a voltage across the stages 704, 706 of the electrodialytic stack 700.

[0037] An air-liquid interface 708 is in fluid communication with the concentrated stream 702b of the liquid desiccant exiting the first stage 704. The air-liquid interface 708 exposes the concentrated stream 702b of the liquid desiccant to air flowing across the air-liquid interface 708, the concentrated stream being diluted via absorption of water from the air to form an output stream 702c. The output stream 702c is combined with the output stream 702e exiting the second stage 706. A first pump 712 circulates the liquid desiccant through the electrodialytic stack 700 and the air-liquid interface 708. After being combined with output stream 702e, the output stream 702c from the air-liquid interface 708 is split into the diluted stream 702a and the concentrated stream 702b upon entry into the electrodialytic stack 700.

[0038] The voltages across the electrodes 704e, 704f, 706e, 706f cause ionic movement across the central ionic exchange membranes 704a, 706a and the first outer ionic exchange membrane 704c, 706c resulting in a desiccant concentrate moving from the first diluted stream 702a to the first redox stream 704ba of stage 704 and to the first concentrated stream 702b, and similarly from the second diluted stream 702d to the first redox stream 706ba of stage 706 and to the second concentrated stream 702e. Second pumps 714, 716 circulate the redox shuttle loops 704b, 706b such that first redox streams 704ba, 706ba and second redox streams 704bb, 706bb flow across the respective first outer ion exchange membranes 704c, 706c and second outer ion exchange membranes 704d, 706d. The voltages will also cause a second (and similar) ionic movement across the second outer exchange membranes 704d, 706d that results in movement of the desiccant concentrate from the second redox streams 704bb, 706bb to the concentrated streams 702b, 702e.

[0039] Note that the stages 704, 706 may be the same or different. For example, each stage 704 may use a different combination of redox shuttle solution, center and outer exchange membrane type, voltage, membrane geometry, desiccant flow geometry, redox flow rate, etc. In this way, the stages 704, 706 can be optimized for different expected concentrations within the parts of the diluted streams 702a, 702d and concentrated streams 702b, 702e. The stages 704, 706 may operate at the same time, and one or the other may be shut off under some conditions. For example, if the concentrate level within the diluted stream 702a is below some threshold, one of the stages 704, 706 may be shut off to save energy and reduce wear. If the concentrate level within the diluted stream 702a goes above this threshold, the deactivated stage 704, 706 can be restarted.

[0040] The embodiment shown in FIG. 7 can be extended to more than two stages 704, 706. Further, while the stages 704, 706 are shown as part of a single electrodialytic stack unit 700, they may be implemented as separate enclosures that are coupled, e.g., by piping to carry the streams 702a, 702b, 702d, 702e of the desiccant loop 702. In one embodiment, one redox pump may be used instead of the two pumps 714, 716, e.g., by running loops 704b, 706b in parallel or in series. Note that a multistage electrodialytic stack such as shown in FIG. 7 may be used in any of the embodiments shown previously (e.g., FIGS. 1-5) and may incorporate any features shown in those and other figures, e.g., fluid storage reservoirs, heat exchangers, etc.

[0041] In FIG. 8, a flowchart shows a method according to an example embodiment. The method involves circulating 800 a liquid desiccant through an air-liquid interface. Air is caused to flow 801 across the air-liquid interface such that the liquid desiccant absorbs water from the air. The liquid desiccant is diluted via the absorption of the water to form an output stream. The output stream is split 802 into a diluted stream and a concentrated stream at an input to an electrodialytic stack. The electrodialytic stack has a central ionic exchange membrane and first and second outer ionic exchange membranes of a different type (e.g., cation or anion) than the central ionic exchange membrane.

[0042] The diluted stream is caused to flow 803 between the central ionic exchange membrane and the first outer ionic exchange membrane. The concentrated stream is caused to flow 804 between the central ionic exchange membrane and the second outer

ionic exchange membrane. A redox shuttle loop is circulated 805 around the first and second outer ionic exchange membranes. A voltage is applied 806 across the electrodialytic stack to cause ionic movement across the central ionic exchange membrane and the first outer ionic exchange membrane. This movement results in a desiccant concentrate moving from the diluted stream to the redox shuttle loop and to the concentrated stream.

[0043] In the examples above, an electrodialytic stack is used to remove water from a gas such as air, which is generally a classified as a fluid. This technology can also be used to remove water (or other solvent) from other fluids besides air, as well as non-fluids. For example, an apparatus as described below can be used for removing water from a concentration of aqueous liquids such as beverages or condiments, drying of non-aqueous liquids, dehydration of solids and so on. The apparatus utilizes a redox-shuttled electrochemical cell that is designed to separate salts from the solvent they are dissolved in, in an energy-efficient manner by circulating a redox-active species that is dissolved in water from the anode to the cathode and back again. The electrochemical cell accepts an input of a salt dissolved into water (or a weak draw solution) and separates it into one output stream of concentrated salt dissolved in water (or a strong draw solution) and a second output stream with a depleted level of salt (or negligible levels of salt) dissolved in water.

[0044] The redox-shuttled electrochemical cell is connected downstream of a membrane interface module which provides a large surface area for the strong draw solution to come into membrane contact with the material to be dried. At the membrane interface module, water is absorbed from the material in question through the membrane and into the strong draw solution, forming a larger volume of weak draw solution. The weak draw solution is regenerated to a smaller volume of strong draw solution and returned to the membrane interface module.

[0045] Forward osmosis is a technique that is commonly used to remove water from an input fluid and into a draw solution. Aqueous solutions of inorganic salts, such as sodium chloride, are routinely used as forward osmosis draw solutions. After the draw solution has absorbed water from the input fluid, it is now more diluted than before and

must be re-concentrated (or regenerated) to its original concentration while removing the extra water that was absorbed from the intake air.

[0046] One approach to re-concentrate the draw solution has been to evaporate the excess water by heating the diluted solution. This is inefficient as the rate of evaporation is slowed when salt content is high and relative humidity is also high. A non-thermal method of concentrating the liquid desiccant solution would avoid these problems. Electrodialysis is well suited to concentrate brines such the aforementioned draw solutions; however, it currently consumes comparatively more energy for salt removal (~0.26 – 0.30 kWh/kg NaCl) than other desalination techniques like RO (0.06 – 0.08 kWh/kg NaCl) but less than for thermal techniques like vapor compression (0.6 – 1.0 kWh/kg NaCl). Capacitive deionization uses electrical energy but is also energy intensive (0.22 kWh/kg NaCl) and is best suited for removing very minute amounts of dissolved salts from water because the electrodes have to be solid, by definition. While electrodialysis is a technique that can be employed to treat brines at any salinity, unlike RO, it has seen limited use because of its high specific energy consumption for salt removal.

[0047] In conventional electrodialysis, ions are driven out of, or into, water by Faradaic reactions at an anode and cathode. In most cases, the Faradaic reactions are that of water splitting: water is oxidized to oxygen at the anode and reduced to hydrogen at the cathode, which then create a charge imbalance at the electrodes that is balanced by the movement of ions through strategically placed ion-selective membranes. However, water splitting involves an energetic penalty because energy is required to do so. The problem is exacerbated by the fact that significant over potentials are associated with both water oxidation and reduction. Moreover, oxygen, chlorine, or bromine gas that is generated at the anode is highly destructive and requires the use of platinum/iridium-plated electrodes.

[0048] An electrochemical cell can be used for energy-efficient electrodialysis to re-concentrate a diluted salt solution and separate a concentrated salt stream from the water that had been absorbed. In FIGS. 9 and 10, diagrams show electrochemical cells 900, 1000 according to example embodiments. The electrochemical cell 900 includes four chambers in series 902-905, each separated from its neighbor by the appropriate ion-selective membrane 908-910. In this case, a positively-charged redox shuttle is used, BTMAP-Fc 508a, 508b. In FIG. 10, the electrochemical cell 1000 uses a negatively-charged redox

shuttle, Fe(CN), with different arrangement of membranes 1008-1010. Note that, in principle, an arbitrary number of pairs of alternating salinate and desalinate chambers can be employed, although water splitting may start to occur at a high number of chambers once the applied voltage exceeds 1.26 V.

[0049] In one embodiment, a redox carrier that is dissolved in water is reduced at the cathode, then shuttled to the anode where it is re-oxidized and subsequently redelivered to the cathode to complete the cycle. Solid redox carriers can in principle also be employed, but require large amounts of the carriers and frequent switching of salinate and desalinate streams because solid redox-active materials cannot be easily transported from one side of the cell to the other.

[0050] In principle, electrodialysis is capable of producing water at salinities well below 0.5 ppt, starting from a feed stream that is at a considerably higher salinity. In one embodiment, the same device is employed to re-concentrate streams of draw solutions, which are typically concentrated solutions of inorganic salts. In order to minimize losses through water crossover from the desalinate stream to the salinate stream, the device may be made from of several different cells, in which the salinity is brought down to a low level in several stages. Furthermore, the redox shuttle should ideally be operated at a concentration that minimizes net water crossover to or from both the salinate and desalinate streams. To this end, BTMAP-Fc is ideal because it has a very high solubility in water that can match the concentrations of the desiccant streams (up to 1.9 molar or ~10 molal).

[0051] In reference now to FIG. 11, a diagram shows a system according to an example embodiment that can be used to absorb water from an input fluid by re-concentrating a stream of solution, e.g., salt solution. The system includes an electrodialysis (ED) device 1100 with a salinate chamber 1102 through which a salinate stream 1104 flows. The ED device 1100 includes a desalinate chamber 1106 separated from the salinate chamber 1102 by a central, ion-selective membrane 1108. A desalinate stream 1110 flows through the desalinate chamber 1106. The desalinate stream 1110 may alternatively be split 1111 from the salinate stream 1104 before it enters the ED device 1100. An anolyte chamber 1112 and a catholyte chamber 1114 are on opposite outer sides

of the salinate and desalinate chambers 1102, 1106 and are separated therefrom by first and second ionic exchange membranes 1116, 1118.

[0052] Ion transport between the anolyte and catholyte chambers 1112, 1114 is driven by faradaic reactions induced by a voltage applied across the anolyte and catholyte chambers 1112, 1114. In one embodiment, one or more redox carriers flow through the anolyte and catholyte chambers 1112, 1114, e.g., a single stream of redox carrier that is dissolved in water and circulates from the anolyte chamber 1112 to the catholyte chamber 1114 and back again. Note that anolyte and catholyte chambers 1112, 1114 may be located opposite to what is shown here, e.g., using a different redox carrier and types of membranes 1108, 1116, 1118.

[0053] The salinate stream is sent to an exchange unit 1120 that is also coupled to a media flow 1122. The exchange unit 1120 includes a water exchange interface 1124 (e.g., a forward osmosis membrane) in contact on a first side with the salinate stream 1104 and in contact the media flow 1122 on a second side. Water 1126 moves away from the media flow 1122, across the water exchange interface 1124, and into the salinate stream 1104. The media flow 1122 may be a liquid, semi-solid, solid, gel, mist, etc., containing at least some water which can be extracted.

[0054] In this example, LiBr is shown as an example draw solution solute that flows through the salinate stream 1104 and desalinate stream 1110. An example concentration of 1% LiBr is shown for the desalinate stream 1110 but it can be higher or lower than that. The desalinate stream 1110 can be discarded or optionally re-concentrated using the same or a different method and fed back to the system, e.g., into one or both of the chambers 1102, 1106. Other solutes may include NaCl, KCl, CaCl2, CaBr2, or LiCl.

[0055] As indicated by block 1128, the desalinate stream 1110 still contains a small amount of dissolved salt which could simply be discharged as waste or reused as gray water if the salt is cheap enough to discard, thereby incurring an operating cost. Alternately, the desalinate stream 1110 can be re-concentrated using techniques such as membrane pervaporation, reverse osmosis, or a second ED device similar in construction to the first ED device 1100, and fed back into an intermediate stage of the ED device 1100. The desalinate stream 1110 can also contain salt at a low enough concentration to be potable (below 0.5 ppt).

[0056] In FIG. 12, a flowchart shows a method according to an example embodiment. The method involves causing 1200 a salinate stream to flow through a salinate chamber. A desalinate stream is caused 1201 to flow through a desalinate chamber that is separated from the salinate chamber by a central, ion-selective membrane. A voltage is applied 1202 across an anolyte chamber and a catholyte chamber on opposite outer sides of the salinate and desalinate chambers and separated therefrom by first and second ionic exchange membranes. The voltage induces a faradaic reaction that causes an ion transport between the anolyte and catholyte chambers. The salinate stream is caused 1203 to flow across a first side of a water exchange interface. A media flow is caused to contact 1204 a second side of the water exchange interface. The water exchange interface moving water from the media flow to the salinate stream.

[0057] In reference again to FIG. 11, the solvent in the salinate stream 1104 and 1110 does not necessarily have to be water, but any generic solvent. Example solvents in the streams 1104, 1110 can be any combination of miscible solvents. Example solvents include, but are not limited to, water, ethanol, butanol, isopropanol, ethylene glycol, diethylene glycol, *N*,*N*-dimethylformamide, 1,4-dioxane, acetone, and tetrahydrofuran.

[0058] The dissolved solute in the salinate stream 1104 and the desalinate stream 1110 is to be understood as including one or more electrolytes that may be concentrated in the ED device 1100. For example, the electrolyte in the streams 1104, 1110 can be any combination of ionic salts that are soluble in the solvent of the streams 1104, 1110, including but not limited to, those encountered in seawater or wastewater. Example cations that can be present in the electrolyte include, but are not limited to, hydronium, lithium, sodium, potassium, magnesium, calcium, aluminum, ammonium, alkylammonium, and imidazolium. Example anions that can be present in the electrolyte include, but are not limited to, chloride, bromide, iodide, sulfonate, phosphonate, carbonate, hydrogencarbonate, carboxylate, halide oxyanions, sulfur oxyanions, phosphorous oxyanions, and nitrogen oxyanions.

[0059] Unless otherwise indicated, all numbers expressing feature sizes, amounts, and physical properties used in the specification and claims are to be understood as being modified in all instances by the term "about." Accordingly, unless indicated to the contrary, the numerical parameters set forth in the foregoing specification and attached

claims are approximations that can vary depending upon the desired properties sought to be obtained by those skilled in the art utilizing the teachings disclosed herein. The use of numerical ranges by endpoints includes all numbers within that range (e.g. 1 to 5 includes 1, 1.5, 2, 2.75, 3, 3.80, 4, and 5) and any range within that range.

[0060] The foregoing description of the example embodiments has been presented for the purposes of illustration and description. It is not intended to be exhaustive or to limit the embodiments to the precise form disclosed. Many modifications and variations are possible in light of the above teaching. Any or all features of the disclosed embodiments can be applied individually or in any combination are not meant to be limiting, but purely illustrative. It is intended that the scope of the invention be limited not with this detailed description, but rather determined by the claims appended hereto.

CLAIMS:

1. A system comprising:

an electrodialysis device comprising:

a salinate chamber through which a salinate stream flows;

a desalinate chamber separated from the salinate chamber by a central, ion-selective membrane, a desalinate stream flowing through the desalinate chamber; and

an anolyte chamber and a catholyte chamber on opposite outer sides of the salinate and desalinate chambers and separated therefrom by first and second ionic exchange membranes, ion transport between the anolyte and catholyte chambers being driven by faradaic reactions induced by a voltage applied across the anolyte and catholyte chambers; and

a solvent exchange interface in contact on a first side with the salinate stream and in contact with a media flow on a second side, the solvent exchange interface moving a solvent from the media flow to the salinate stream.

2. The system of claim 1, wherein the media flow comprises a fluid.

3. The system of claim 1, wherein the media flow comprises a solid, a semi-solid, or a mixture of fluid and solid or semi solid.

4. The system of claim 1, wherein the faradaic reactions utilize a redox carrier stream that flows through the anolyte chamber and the catholyte chamber.

5. The system of claim 4, wherein the redox carrier stream circulates from the anolyte chamber to the catholyte chamber and back again.

6. The system of claim 1, wherein the solvent in the salinate stream and the desalinate stream comprises water.

7. The system of claim 1, wherein the salinate stream and the desalinate stream comprise a salt solution.

8. The system of claim 7, wherein the salt solution comprises at least one of NaCl, KCl, $CaCl_2$, $CaBr_2$, LiCl, or LiBr.

9. The system of claim 1, wherein the solvent exchange interface comprises a forward osmosis membrane.

10. The system of claim 1, wherein the desalinate stream is re-concentrated and returned to the electrodialysis device.

11. A method comprising:

causing a salinate stream to flow through a salinate chamber;

causing a desalinate stream to flow through a desalinate chamber that is separated from the salinate chamber by a central, ion-selective membrane;

applying a voltage across an anolyte chamber and a catholyte chamber on opposite outer sides of the salinate and desalinate chambers and separated therefrom by first and second ionic exchange membranes, the voltage inducing a faradaic reaction that causes an ion transport between the anolyte and catholyte chambers;

causing the salinate stream to flow across a first side of a solvent exchange interface; and

causing a media flow to contact a second side of the solvent exchange interface, the solvent exchange interface moving solvent from the media flow to the salinate stream.

12. The method of claim 11, wherein the media flow comprises a fluid.

13. The method of claim 11, wherein the media flow comprises a solid, a semi-solid, or a mixture of fluid and solid or semi solid.

14. The method of claim 11, wherein the faradaic reactions utilize a redox carrier stream that flows through the anolyte chamber and the catholyte chamber.

15. The method of claim 14, wherein the redox carrier stream circulates from the anolyte chamber to the catholyte chamber and back again.

16. The method of claim 11, wherein the solvent in the salinate stream and the desalinate stream comprises water.

17. The method of claim 11, wherein the salinate stream and the desalinate stream comprise a salt solution.

18. The method of claim 17, wherein the salt solution comprises at least one of NaCl, KCl, $CaCl_2$, $CaBr_2$, LiCl, or LiBr.

19. The method of claim 11, wherein the solvent exchange interface comprises a forward osmosis membrane.

20. The method of claim 11, further comprising re-concentrating the desalinate stream and returning the re-concentrated desalinate stream to one or more of the salinate and desalinate chambers.

FIG. 1

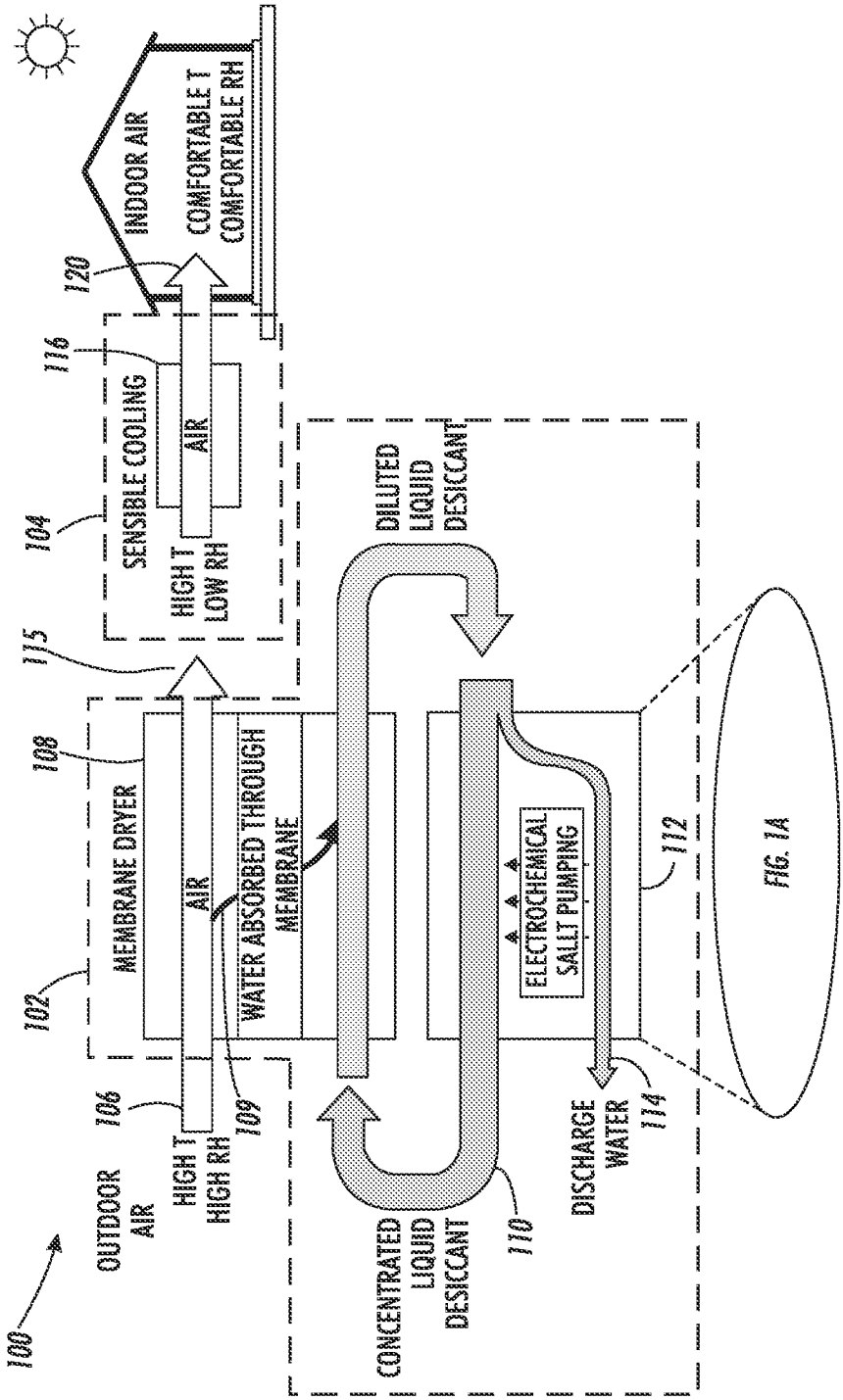
100
OUTDOOR AIR
HIGH T HIGH RH
106
MEMBRANE DRYER
102
AIR
WATER ABSORBED THROUGH MEMBRANE
108
109
115
SENSIBLE COOLING
104
AIR
HIGH T LOW RH
116
INDOOR AIR
120
COMFORTABLE T COMFORTABLE RH
DILUTED LIQUID DESICCANT
CONCENTRATED LIQUID DESICCANT
110
ELECTROCHEMICAL SALT PUMPING
112
DISCHARGE WATER
114
FIG. 1A

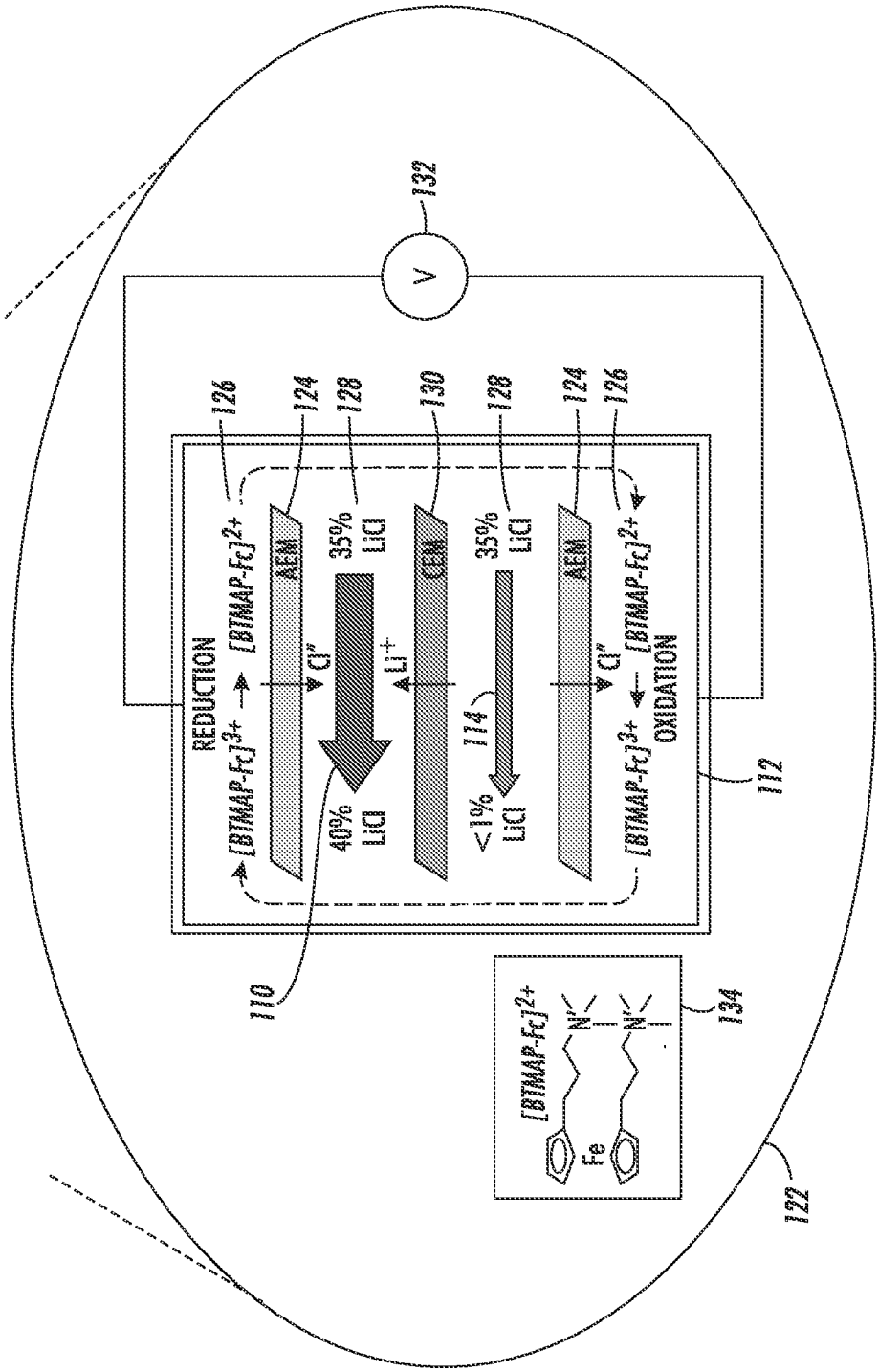
132
V
126
124
128
130
128
124
126
REDUCTION
[BTMAP-Fc]3+
[BTMAP-Fc]2+
AEM
35% LiCl
CEM
35% LiCl
AEM
[BTMAP-Fc]2+
[BTMAP-Fc]3+
OXIDATION
Cl"
Li+
Cl"
114
40% LiCl
<1% LiCl
112
110
[BTMAP-Fc]2+
N
N
Fe
134
122

FIG. 1A

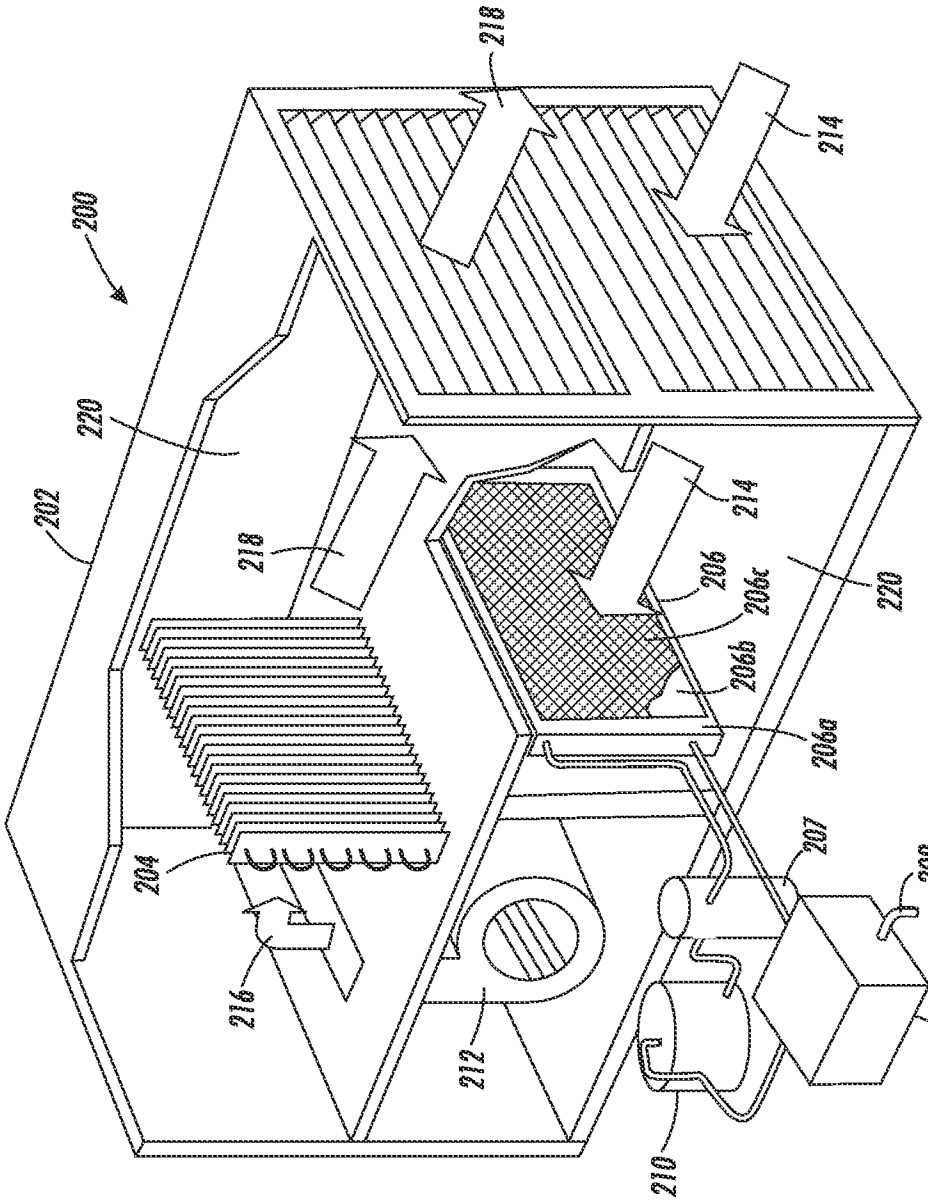
218
214
200
220
202
218
214
206
206c
220
206b
206a
204
207
209
216
212
208
210

FIG. 2

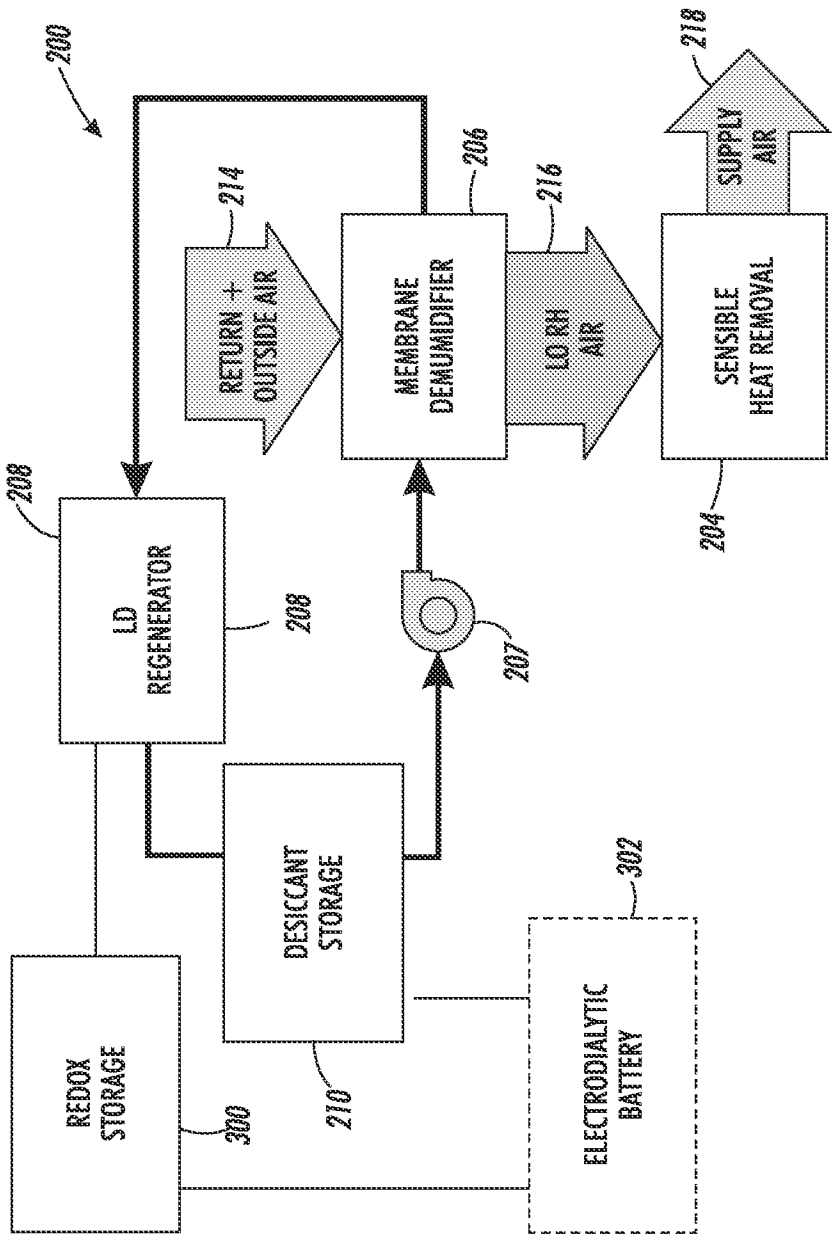
200
214
RETURN + OUTSIDE AIR
206
MEMBRANE DEHUMIDIFIER
216
LD RH AIR
218
SUPPLY AIR
SENSIBLE HEAT REMOVAL
204
208
LD REGENERATOR
208
207
DESICCANT STORAGE
210
302
ELECTRODIALYTIC BATTERY
REDOX STORAGE
300

FIG. 3

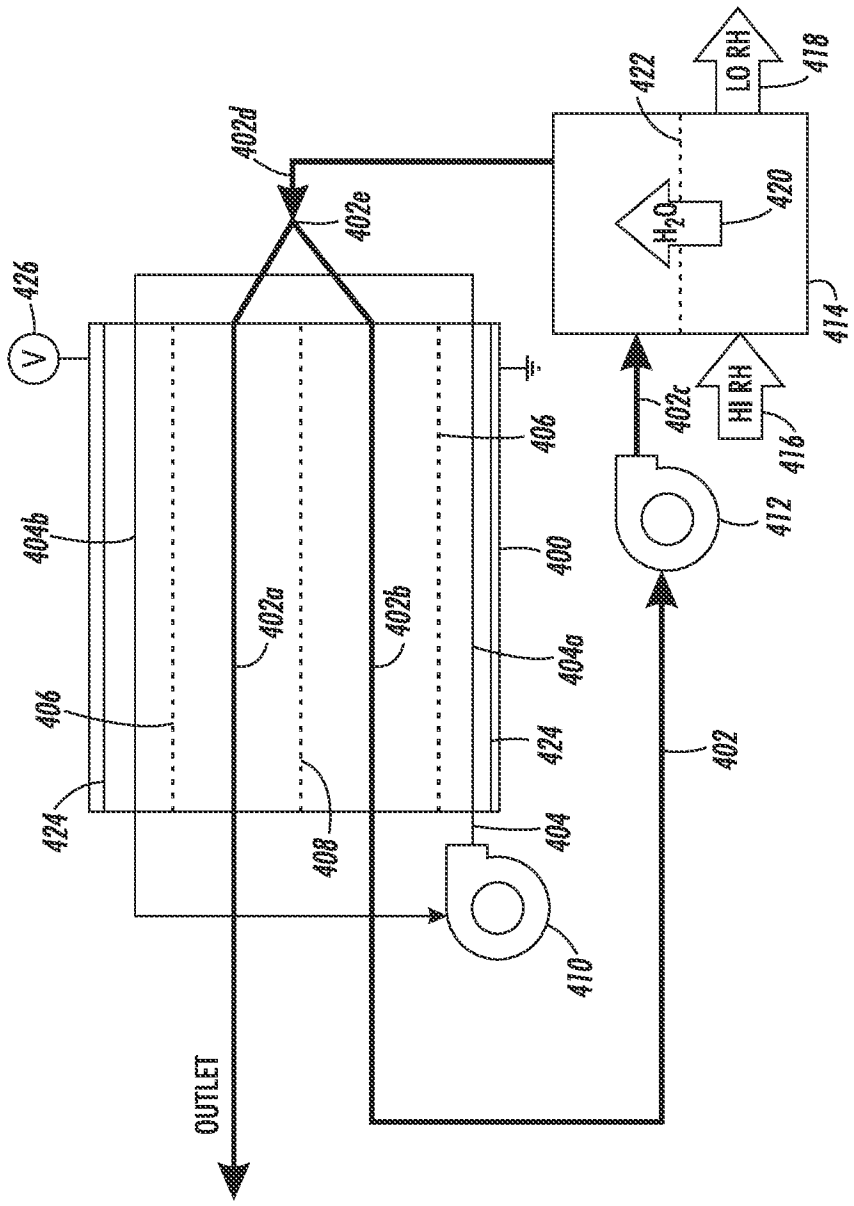
426
V
402d
402e
422
LO RH
418
H_2O
420
414
HI RH
416
402c
412
406
400
404b
402a
402b
404a
406
424
402
424
408
404
410
OUTLET

FIG. 4

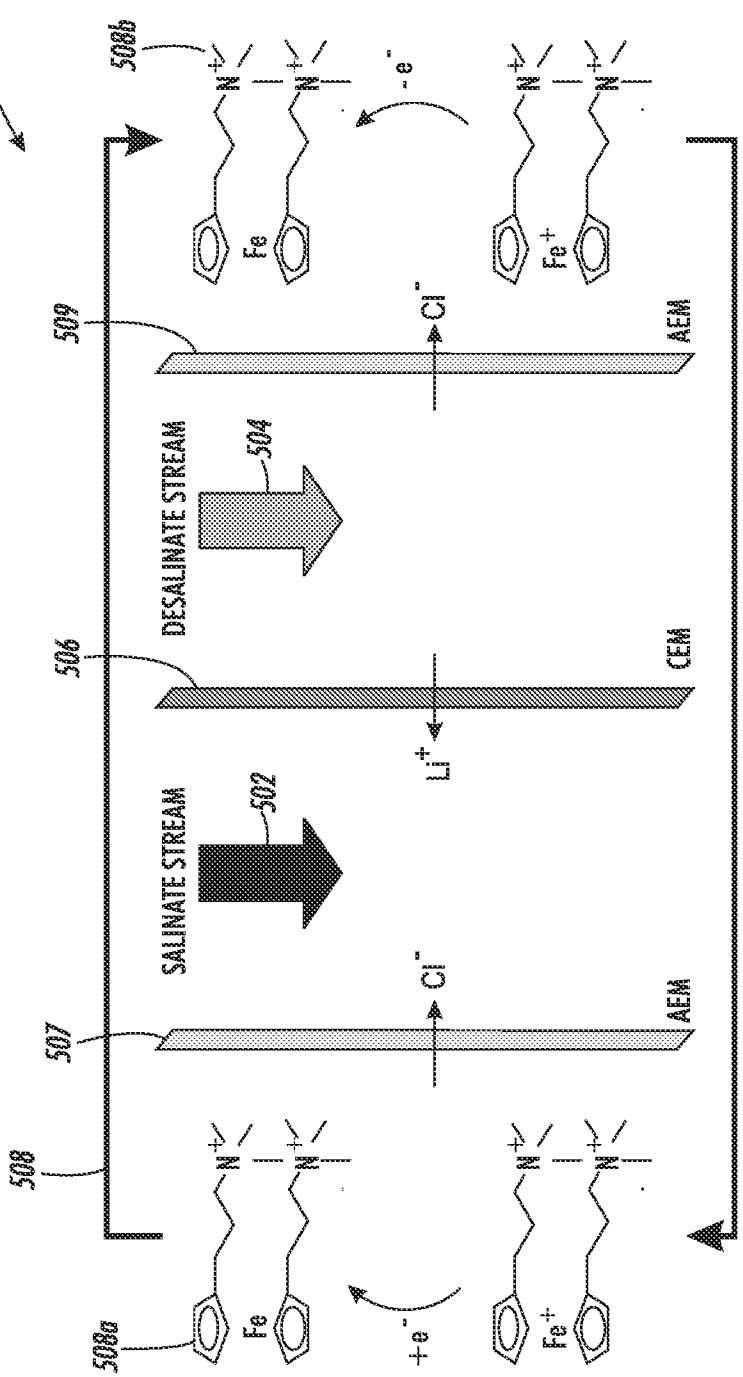
500
508b
509
507
508
508a
506
504
502
DESALINATE STREAM
SALINATE STREAM
AEM
CEM
AEM
Cl⁻
Li⁺
Cl⁻
- e⁻
+ e⁻
Fe
Fe⁺

FIG. 5A

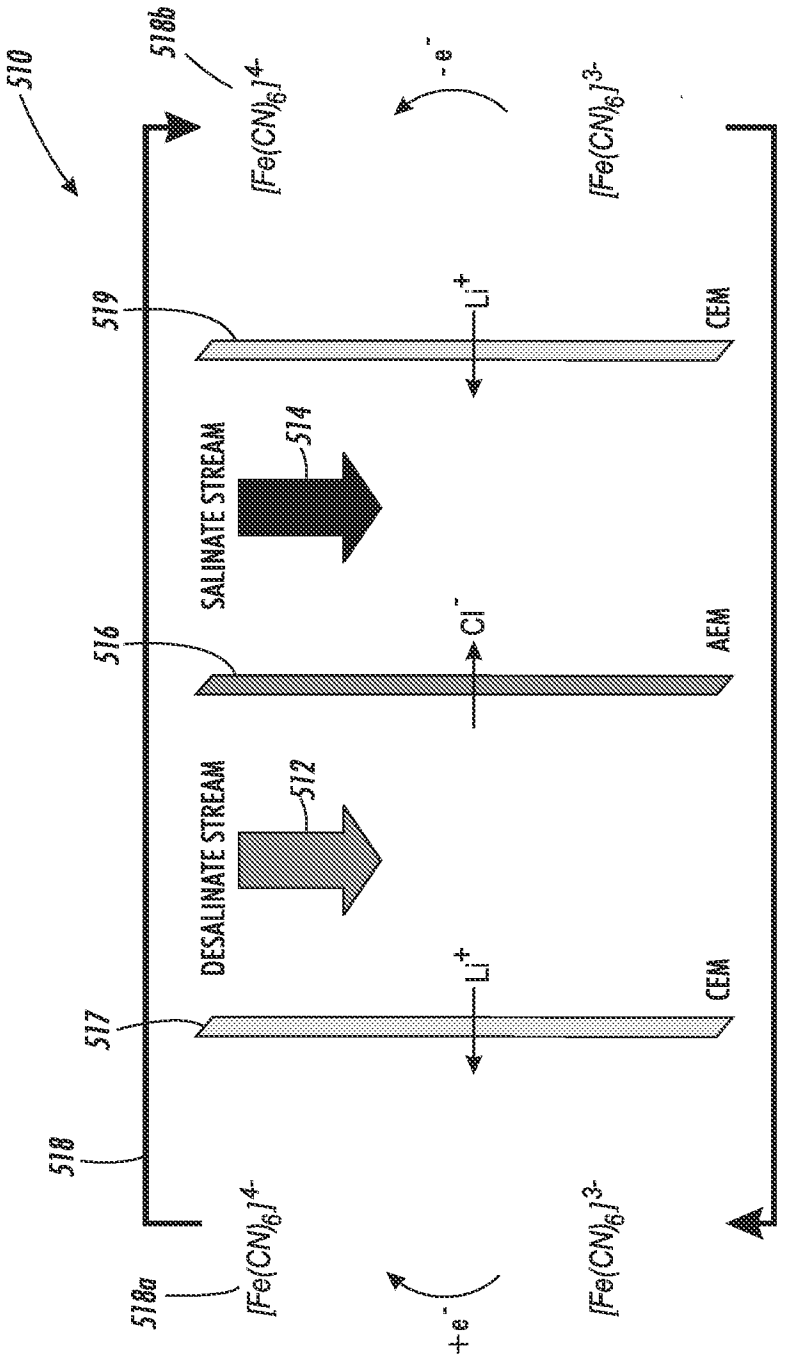
510
518b
$[Fe(CN)_6]^{4-}$
$-e^-$
$[Fe(CN)_6]^{3-}$
519
Li^+
CEM
SALINATE STREAM
514
516
Cl^-
AEM
DESALINATE STREAM
512
517
Li^+
CEM
518
518a
$[Fe(CN)_6]^{4-}$
$+e^-$
$[Fe(CN)_6]^{3-}$

FIG. 5B

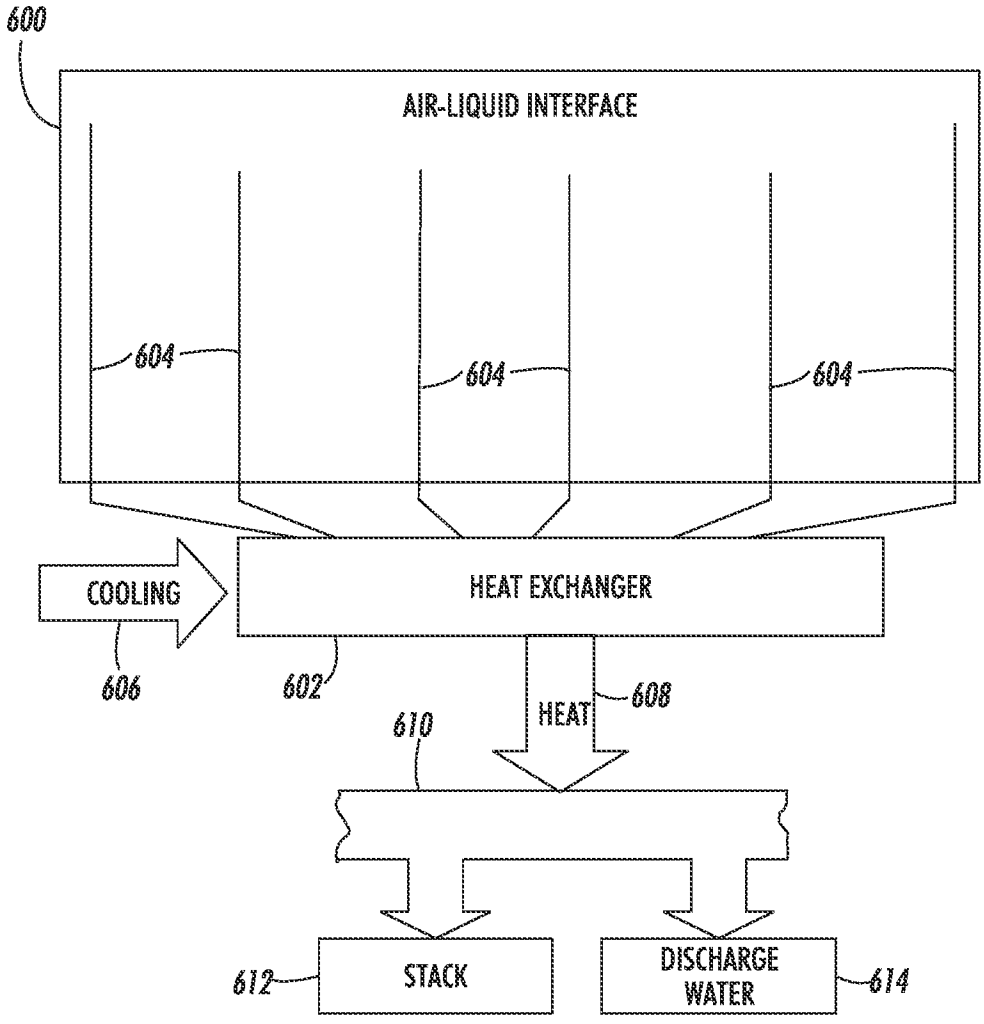
600
AIR-LIQUID INTERFACE
604
604
604
COOLING
HEAT EXCHANGER
606
602
HEAT
608
610
612
STACK
DISCHARGE WATER
614

FIG. 6

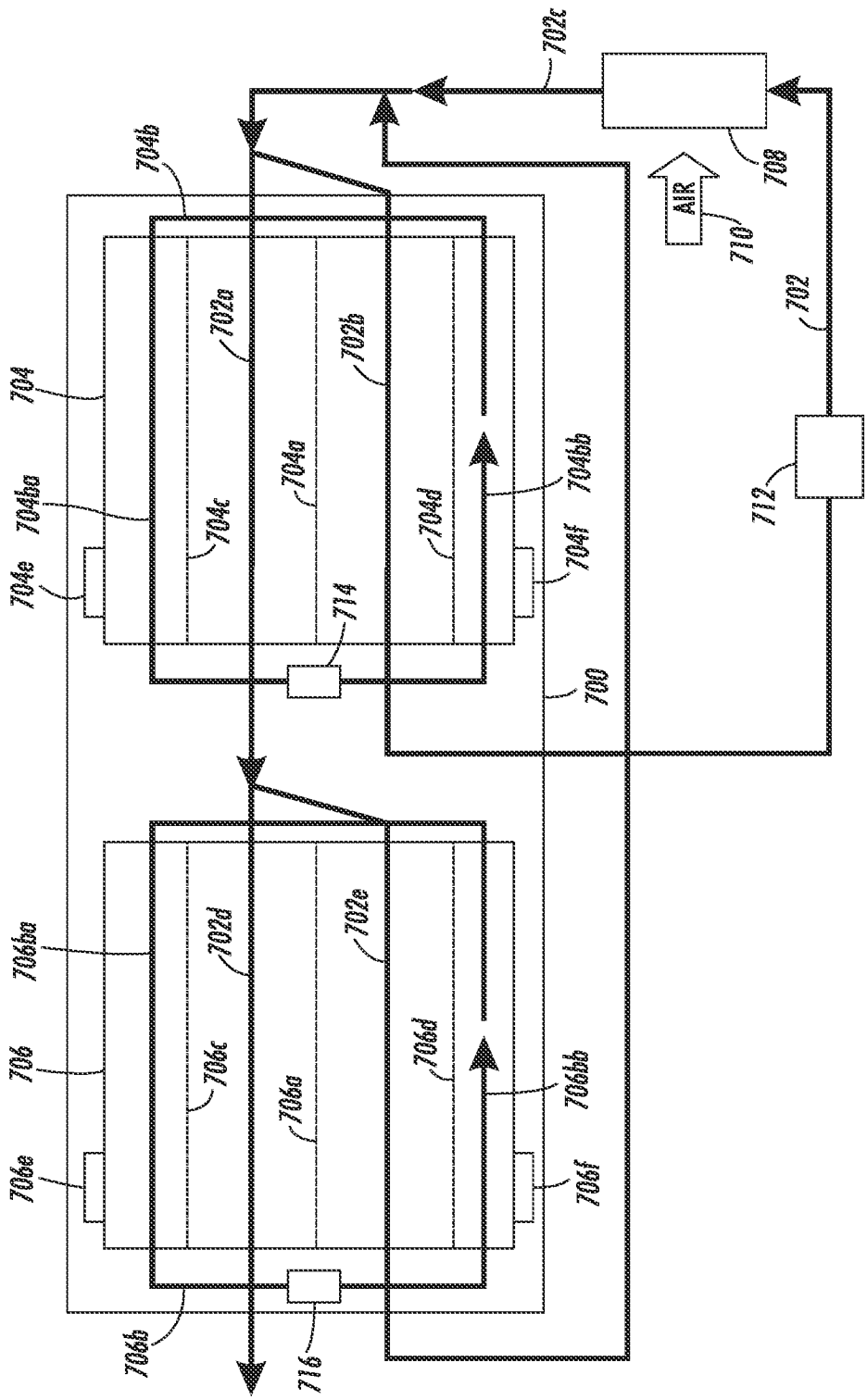
702c
708
AIR
710
702
712
704b
704
702a
702b
704a
704ba
704c
704d
704bb
704e
704f
714
700
706ba
706
706e
702d
702e
706c
706a
706d
706bb
706f
706b
716

FIG. 7

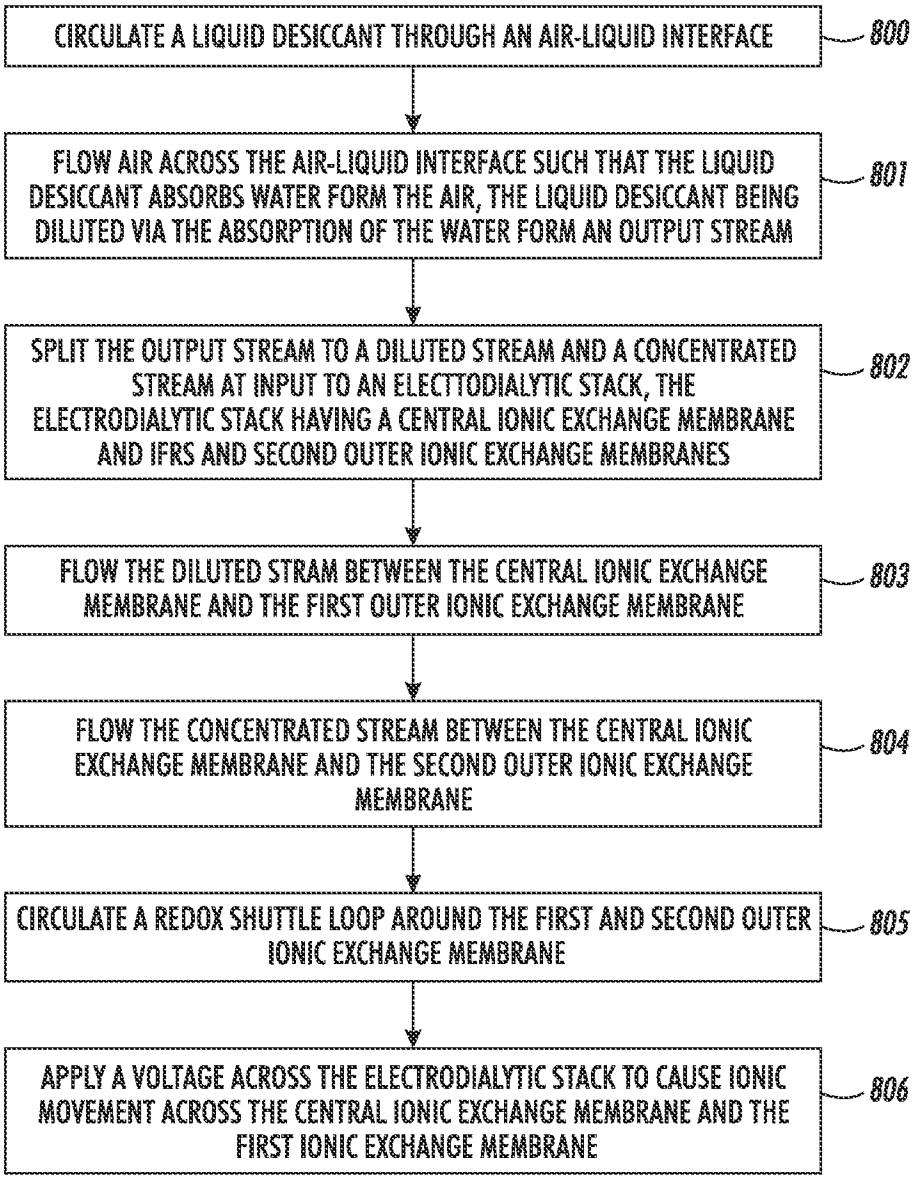
CIRCULATE A LIQUID DESICCANT THROUGH AN AIR-LIQUID INTERFACE
800
FLOW AIR ACROSS THE AIR-LIQUID INTERFACE SUCH THAT THE LIQUID DESICCANT ABSORBS WATER FORM THE AIR, THE LIQUID DESICCANT BEING DILUTED VIA THE ABSORPTION OF THE WATER FORM AN OUTPUT STREAM
801
SPLIT THE OUTPUT STREAM TO A DILUTED STREAM AND A CONCENTRATED STREAM AT INPUT TO AN ELECTTODIALYTIC STACK, THE ELECTRODIALYTIC STACK HAVING A CENTRAL IONIC EXCHANGE MEMBRANE AND IFRS AND SECOND OUTER IONIC EXCHANGE MEMBRANES
802
FLOW THE DILUTED STRAM BETWEEN THE CENTRAL IONIC EXCHANGE MEMBRANE AND THE FIRST OUTER IONIC EXCHANGE MEMBRANE
803
FLOW THE CONCENTRATED STREAM BETWEEN THE CENTRAL IONIC EXCHANGE MEMBRANE AND THE SECOND OUTER IONIC EXCHANGE MEMBRANE
804
CIRCULATE A REDOX SHUTTLE LOOP AROUND THE FIRST AND SECOND OUTER IONIC EXCHANGE MEMBRANE
805
APPLY A VOLTAGE ACROSS THE ELECTRODIALYTIC STACK TO CAUSE IONIC MOVEMENT ACROSS THE CENTRAL IONIC EXCHANGE MEMBRANE AND THE FIRST IONIC EXCHANGE MEMBRANE
806

FIG. 8

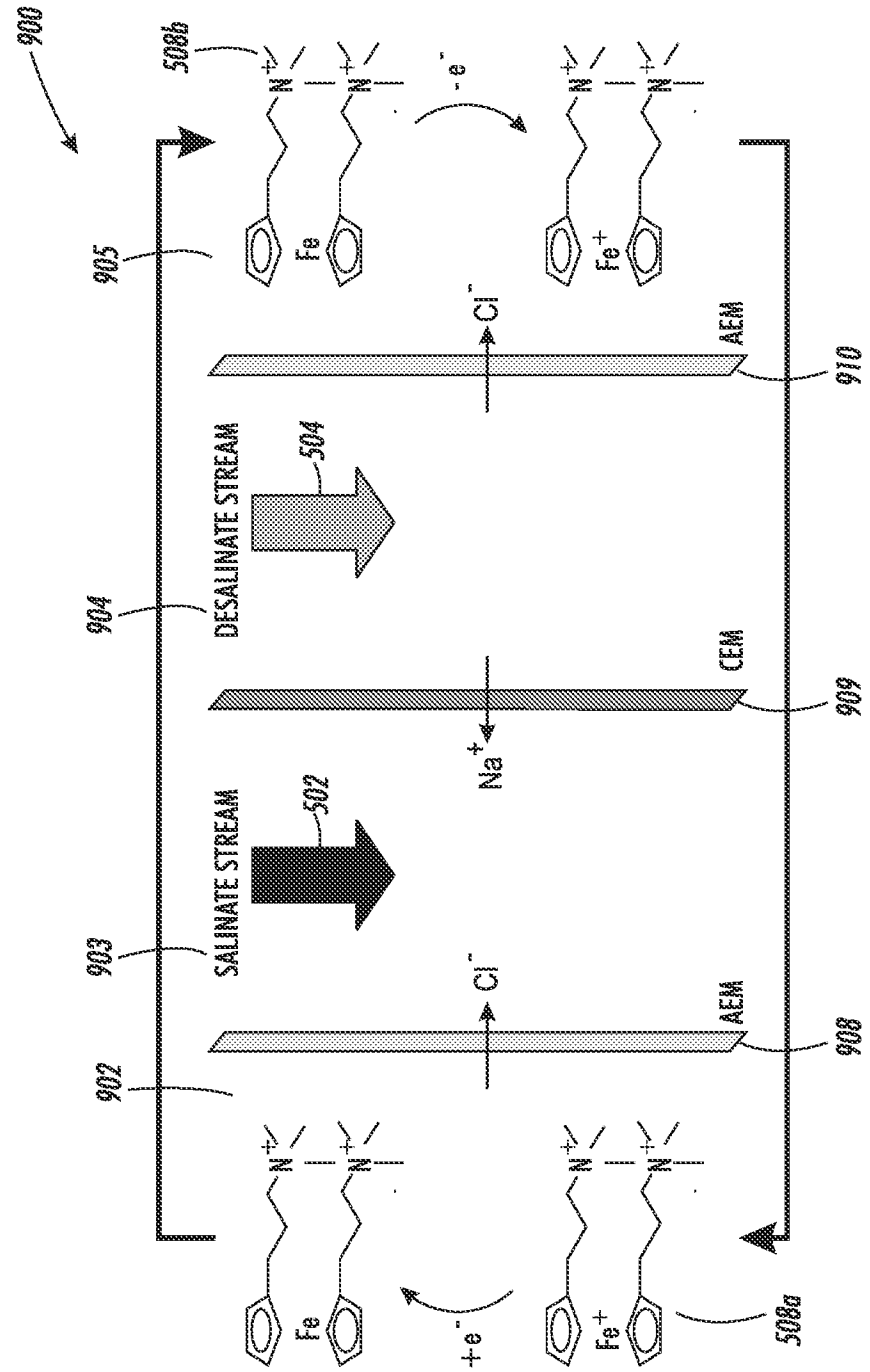
900
508b
905
Fe
Fe+
- e-
Cl-
AEM
910
DESALINATE STREAM
504
904
CEM
909
Na+
SALINATE STREAM
502
903
Cl-
AEM
908
902
+ e-
Fe
Fe+
508a

FIG. 9

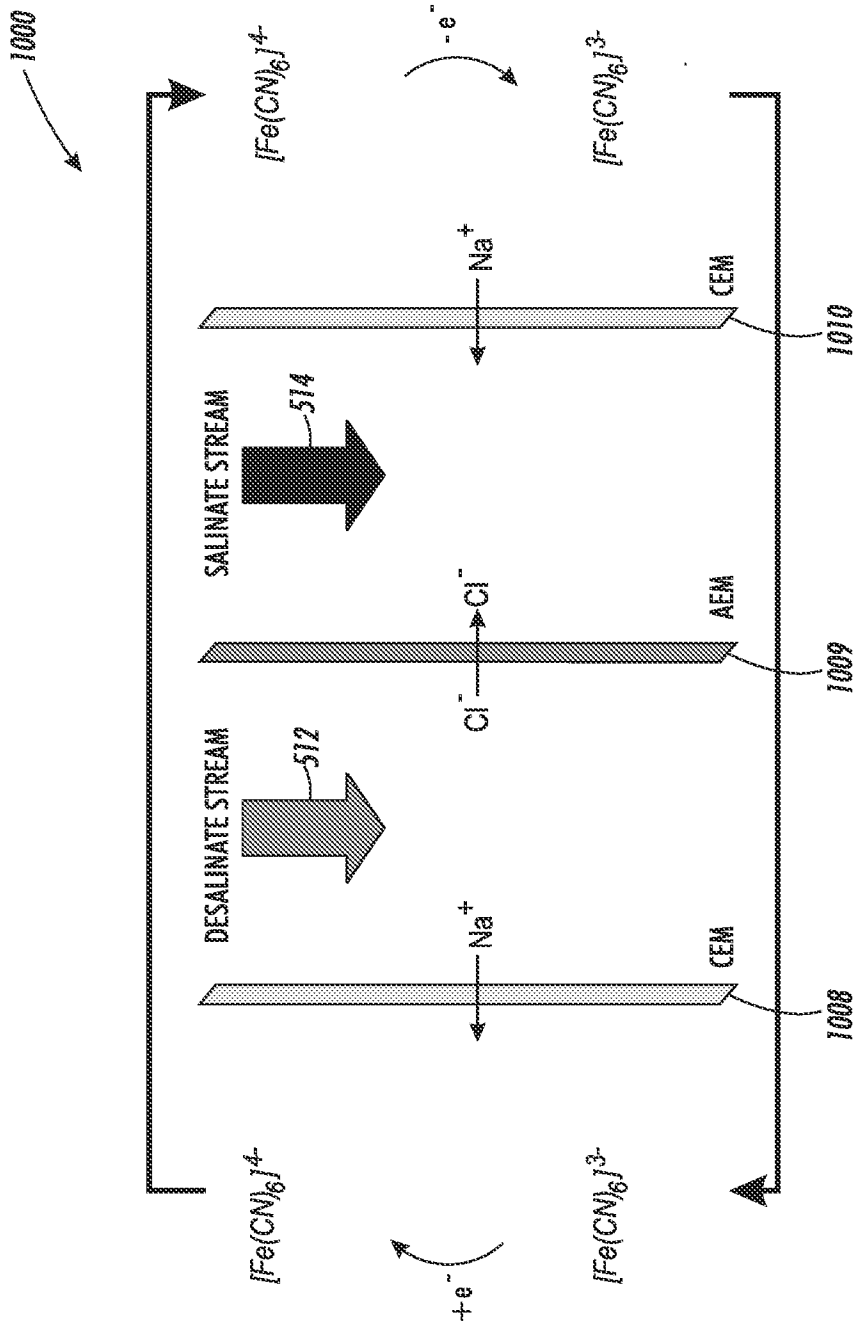
1000
$[Fe(CN)_6]^{4-}$
$-e^-$
$[Fe(CN)_6]^{3-}$
Na^+
CEM
1010
SALINATE STREAM
514
Cl^-
AEM
1009
DESALINATE STREAM
512
Na^+
CEM
1008
$[Fe(CN)_6]^{4-}$
$+e^-$
$[Fe(CN)_6]^{3-}$

FIG. 10

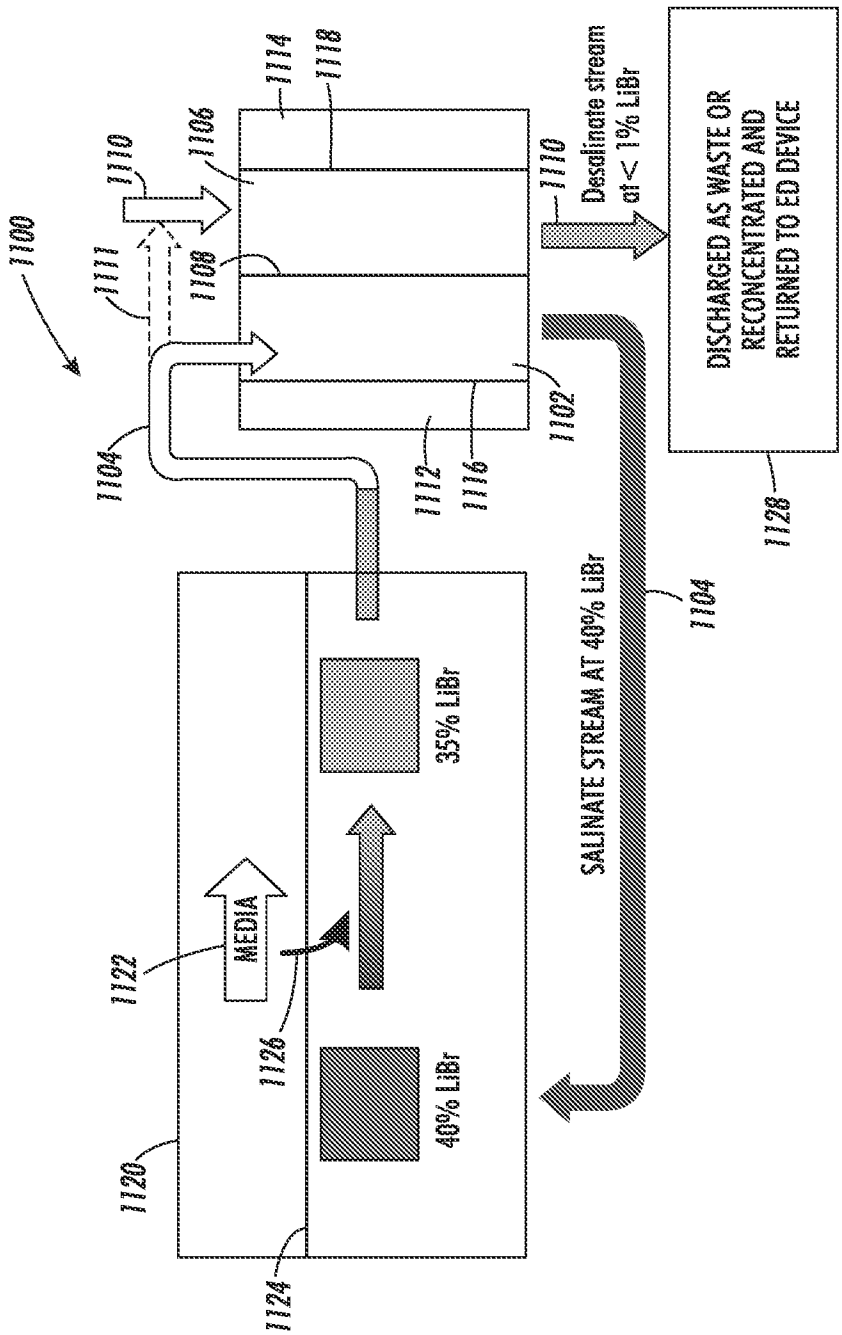
1100
1111
1110
1106
1108
1114
1118
1104
1112
1116
1102
1110
Desalinate stream at < 1% LiBr
DISCHARGED AS WASTE OR RECONCENTRATED AND RETURNED TO ED DEVICE
1128
1104
SALINATE STREAM AT 40% LiBr
35% LiBr
40% LiBr
MEDIA
1122
1126
1120
1124

FIG. 11

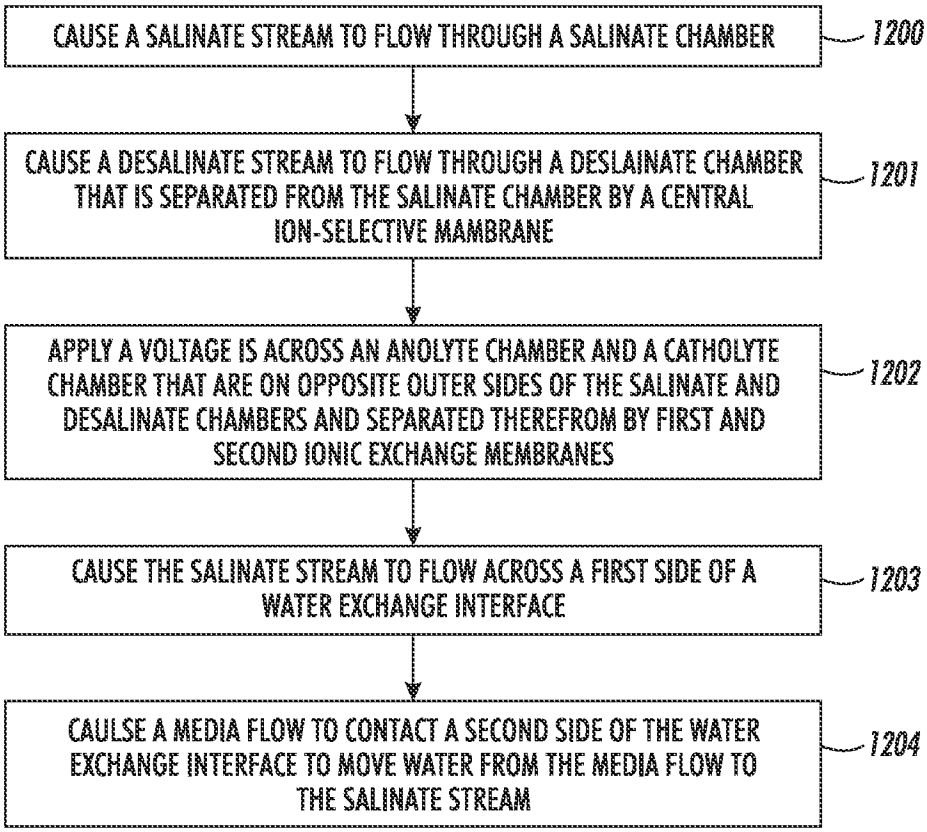
CAUSE A SALINATE STREAM TO FLOW THROUGH A SALINATE CHAMBER
1200
CAUSE A DESALINATE STREAM TO FLOW THROUGH A DESLAINATE CHAMBER THAT IS SEPARATED FROM THE SALINATE CHAMBER BY A CENTRAL ION-SELECTIVE MAMBRANE
1201
APPLY A VOLTAGE IS ACROSS AN ANOLYTE CHAMBER AND A CATHOLYTE CHAMBER THAT ARE ON OPPOSITE OUTER SIDES OF THE SALINATE AND DESALINATE CHAMBERS AND SEPARATED THEREFROM BY FIRST AND SECOND IONIC EXCHANGE MEMBRANES
1202
CAUSE THE SALINATE STREAM TO FLOW ACROSS A FIRST SIDE OF A WATER EXCHANGE INTERFACE
1203
CAULSE A MEDIA FLOW TO CONTACT A SECOND SIDE OF THE WATER EXCHANGE INTERFACE TO MOVE WATER FROM THE MEDIA FLOW TO THE SALINATE STREAM
1204

FIG. 12