Feb. 21, 1928. 1,659,572

E. O. KLEMM

CHAIR

Filed April 27, 1926

Fig. 1.

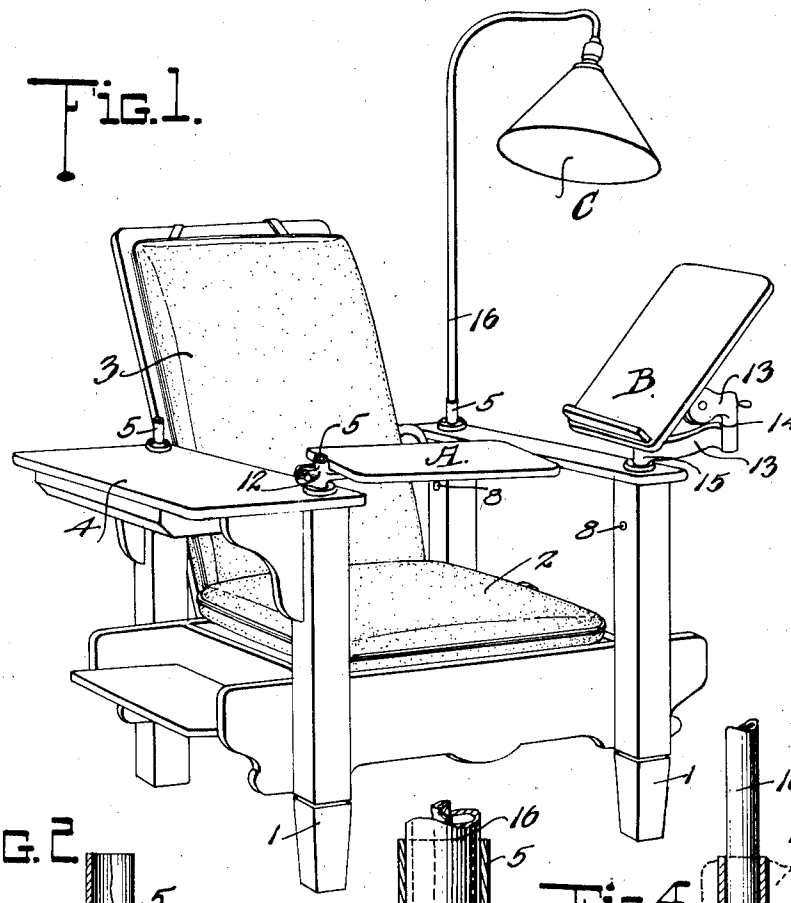

Fig. 2.

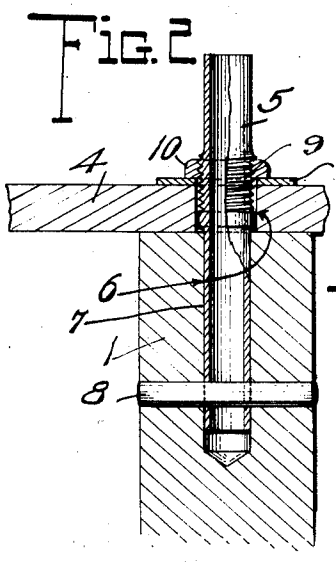

Fig. 3.

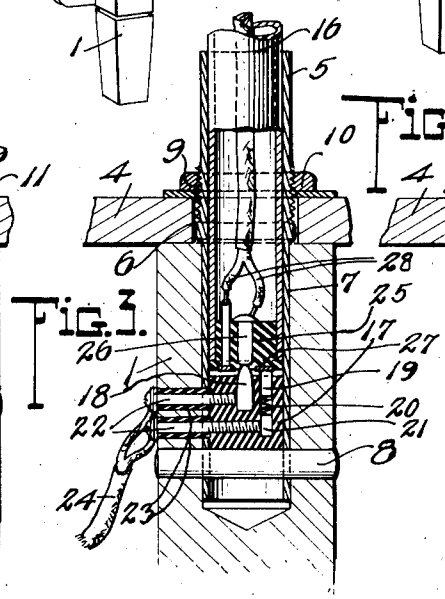

Fig. 4.

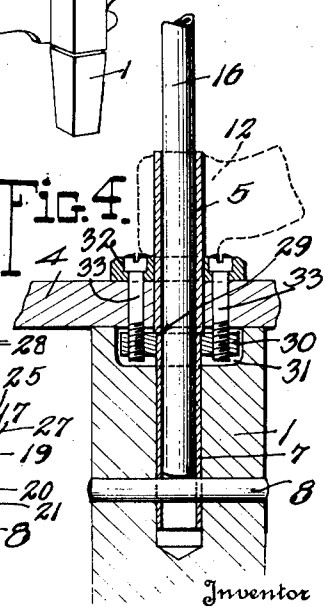

Inventor

E. O. Klemm

By Robb, Robb & Hill

Attorneys

Patented Feb. 21, 1928. 1,659,572

UNITED STATES PATENT OFFICE.

EDWIN O. KLEMM, OF SAGINAW, MICHIGAN.

CHAIR.

Application filed April 27, 1926. Serial No. 104,984.

The present invention relates in general to furniture, and more particularly to a novel fastening means which performs the additional function of providing a mounting for supporting various kinds of attachments.

Among the objects of the invention are to provide a construction which enables two parts of an article of furniture, such as a corner upright and arm rest of a chair to be securely clamped together, and which at the same time provides means for supporting some form of an attachment, such as a shelf, book rest, light or the like.

Further objects of the invention are to provide a device of this character which is comparatively simple and inexpensive in its construction, which can be readily applied to the parts to be secured together without disfiguring the same, which provides a rigid clamp for the parts which are fastened together, and which also provides a similar mounting for any form of attachment which it may be desired to place thereon.

While certain particular forms of the invention are shown and described in this application as embodied in the construction of a chair for illustrative purposes, it will be understood that the invention can be used upon other articles of furniture and that many modifications and changes can be made in the details of construction without departing from the spirit of the invention.

For a full understanding of the invention reference is to be had to the following description and accompanying drawings, in which

Figure 1 is a perspective view of a chair which has the arm rests secured to the corner standards thereof by fixtures which embody the invention.

Figure 2 is an enlarged detail sectional view through the upper end of a corner standard and a portion of the arm rest, showing a simple form of the invention.

Figure 3 is a similar view showing a method of wiring the attachment when it is to be used for supporting the standard of an electric light.

Figure 4 is a similar view showing a modified form of the invention.

Corresponding and like parts are referred to in the following description and indicated on all of the views of the drawing by like reference characters.

For illustrative purposes the invention is shown as utilizing the construction of a chair. The chair is constructed with legs or corner standards 1, a seat 2, a back 3, and arm rests 4 which are mounted on the upper ends of the standards 1 on opposite sides of the seat 2. Fixtures which embody the invention are utilized for securing the arm rests 4 to the standards 1, and these fixtures also provide a means for supporting an attachment such as the shelf A, book rest B, or electric light C.

The fixture includes a tubular stem 5 which extends through an opening 6, in the arm rest and has the lower end thereof embedded in an opening 7 in the upper end of the standard 1. The lower end of the tubular stem is firmly anchored in the standard in some suitable manner as by means of a transverse pin 8 which extends through corresponding openings in the tubular stem and standard. The transverse pin can be driven in position after the lower end of the stem has been inserted in the standard. An intermediate portion of the tubular stem may be slightly enlarged and exteriorly threaded, as indicated at 9. A clamping nut 10 is fitted on these exterior threads 9 and engages a washer 11 which surrounds the stem and rests on the top of the arm rest 4. With this construction it will be obvious that by tightening the nut 10 the arm rest is forced against the upper end of the standard 1 and securely clamped in position.

The upper end of the tubular stem 5 extends above the arm rest and nut 10 and provides a bearing upon which a sleeve can be readily slipped. The shelf A is shown as provided at one end thereof with a sleeve 12 which can be readily slipped over the projecting upper end of any selected one of the tubular stems 5 when the occupant of the chair wishes to use the shelf. The shelf is then pivotally mounted so that it can readily be swung about the tubular stem as an axis into any desired position. In a similar

manner the book rest B is mounted on a pair of arms 13 which are pivotally connected at 14, one of the arms terminating in a sleeve 15 which can be slipped loosely over the projecting upper end of any selected one of the tubular stems 5. The book rest can then be readily swung into any desired position.

The electric light C is formed with a standard 16 which can be slipped into any selected one of the tubular stems 5, being rotatably supported thereby so that it is held in an upright position and can be rotated to bring the light into the place where it is desired. The fixtures may be wired, as shown by Figure 3, so that the light is automatically connected to the terminals of an electric light circuit when the standard 16 thereof is dropped in place in one of the tubular stems 5. As shown by Figure 3, an insulating block 17 may be arranged in the lower end of the tubular stem 5, being preferably positioned just above the openings which are provided to receive the transverse anchoring pin 8. The insulating block 17 is formed with a central contact member 18 and also with a resiliently mounted contact plunger 19 arranged at one side thereof. A coil spring 20 is shown as interposed between the plunger 19 and a small pin 21. The central contact member 18 and pin 21 are engaged by screws 22 which extend through one side of the upright standard 1. Insulating sleeves 23 are shown as arranged in the standard 1 to receive the screws 22, and the outer ends of the screws have the terminal wires 24 of an electric light circuit secured thereto. The lower end of the standard 16 of the electric light has an insulating plug 25 fitted therein, the base of the plug being provided with a central contact 26 and also with a contact ring 27. Electric wires 28 which extend through the standard 16 to the right have the ends thereof connected to the central contact 26 and contact ring 27, respectively. With this construction it will be obvious that when the standard 16 of the electric light is dropped in the tubuar stem 5, the two central contacts 18 and 26 will engage each other and the yielding contact plunger 19 will engage the contact ring 27 at all positions of the standard. The electric light can be rotated into the desired position and the contacts will remain in operative engagement with each other at all times. When the fixtures are wired in this manner it avoids the inconvenience of having an electric cord and plug attached to the lamp attachment C.

A slight modification is shown by Figure 4, in which the tubular stem 5 is formed at an intermediate point in its length with an exterior shoulder 29 which engages a plate 30 arranged in a recess 31 in the upper end of the standard 1. A clamping plate 32 which is slipped over the upper end of the tubular stem engages the top of the arm rest and is connected to the lower plate 30 by means of screws 33 which extend through the arm rest. It will be obvious that by tightening these screws the arm rest can be forced against the upper end of the standard 1 and clamped securely in position. The tubular stem is adapted to be used, as previously described, for the temporary mounting of a chair attachment. In all forms of the invention the fixture performs the double function of providing a fastening means for securely clamping the arm rests to the corner standards, and also providing a means for engaging an attachment of some kind.

Having thus described my invention what I claim as new and desire to secrue by Letters Patent is,

1. In an article of furniture, the combination with two abutting members having openings therein, of a continuous stem extending through the openings, means directly engaging the inner end of said stem for anchoring the stem to one of the members, and means on the stem for engaging the other member to clamp the two members together, the outer end of the stem projecting beyond one of the members to provide a support for an attachment and the inner end of the stem into the abutting member.

2. In an article of furniture, the combination with two abutting members having openings therein, a tubular stem extending through the opening in one member and seated in the abutting member, means carried by one member for engaging and anchoring the tubular stem in one of the members, and means on the tubular stem for engaging the other member to clamp the members together, the tubular stem extending beyond one of the members and the projecting end thereof being adapted either to receive a stem on the interior thereof or a sleeve on the exterior thereof to support an attachment.

3. In an article of furniture, the combination with an upright and a transverse member fitting against an end of the upright, of a tubular stem extending through the transverse member and into the end of the standard, an anchoring pin extending transversely through the standard and engaging the end of the tubular stem, and clamping means threaded on an intermediate portion of the stem and engaging the transverse member to secure it against the end of the standard, one end of the tubular stem projecting beyond the transverse member and being adapted either to receive a stem or engage a sleeve to support an attachment.

4. A chair including a corner upright and an arm rest extending over an end thereof,

a tubular stem extending through the arm rest and entering the end of the standard, an anchoring pin extending transverse through the standard and engaging the said end of the tubular stem, and clamping means mounted on an intermediate portion of the stem for engaging the arm rest to secure it against the end of the standard, the other end of the tubular stem extending beyond the standard and being adapted either to receive a stem or engage a sleeve to support an attachment.

In testimony whereof I affix my signature.

EDWIN O. KLEMM.