R. T. RUCKER.

STATION INDICATOR.

APPLICATION FILED JULY 31, 1914.

1,146,207.

Patented July 13, 1915.

3 SHEETS—SHEET 1.

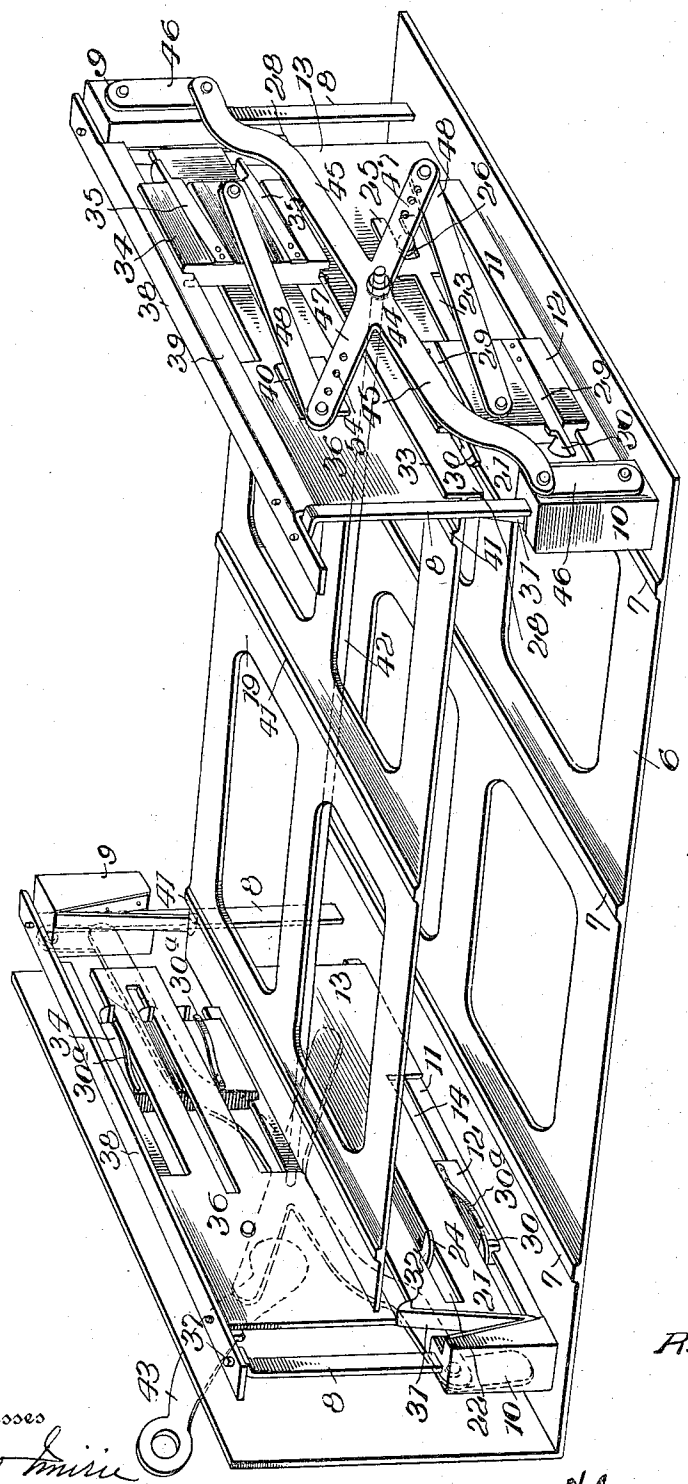

Fig. 1.

Witnesses

Jno. Smith

R. W. Bishop

Inventor

R. T. Rucker

Attorneys.

COLUMBIA PLANOGRAPH CO., WASHINGTON, D. C.

R. T. RUCKER.

STATION INDICATOR.

APPLICATION FILED JULY 31, 1914.

1,146,207.

Patented July 13, 1915.

3 SHEETS—SHEET 2.

Fig. 2.

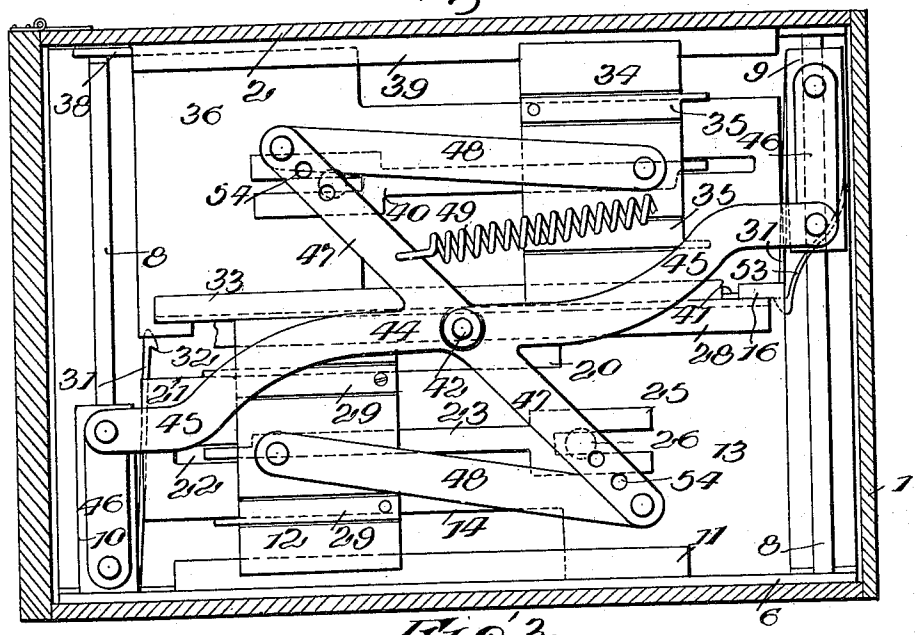

Fig. 3.

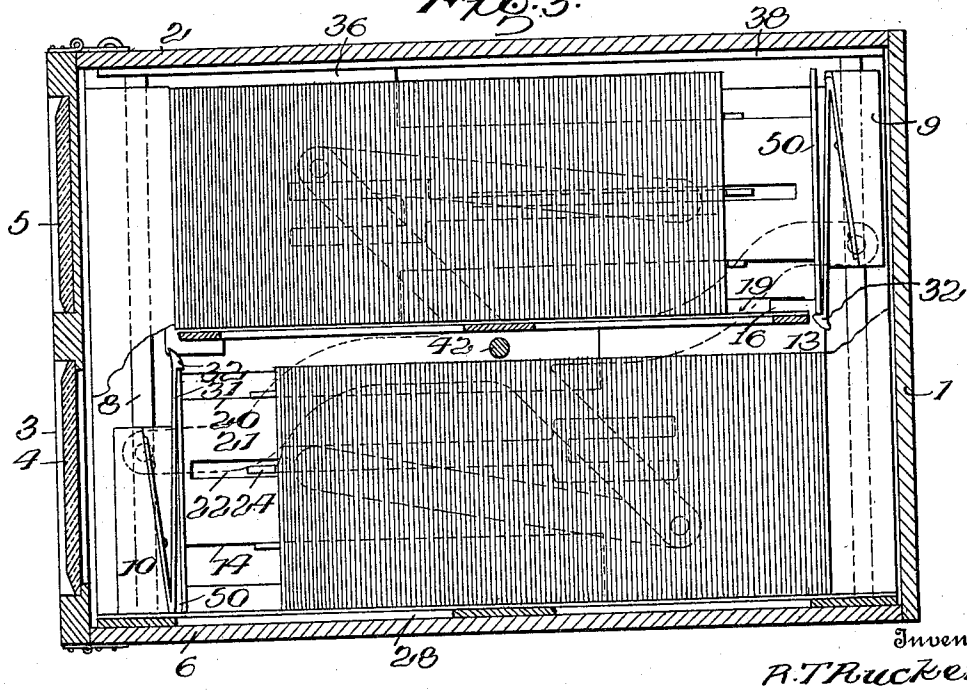

Inventor

R. T. Rucker

Witnesses

Jno Smirie

R. W. Bishop

By [illegible] Attorneys.

COLUMBIA PLANOGRAPH CO., WASHINGTON, D. C.

R. T. RUCKER.

STATION INDICATOR.

APPLICATION FILED JULY 31, 1914.

1,146,207.

Patented July 13, 1915.

3 SHEETS—SHEET 3.

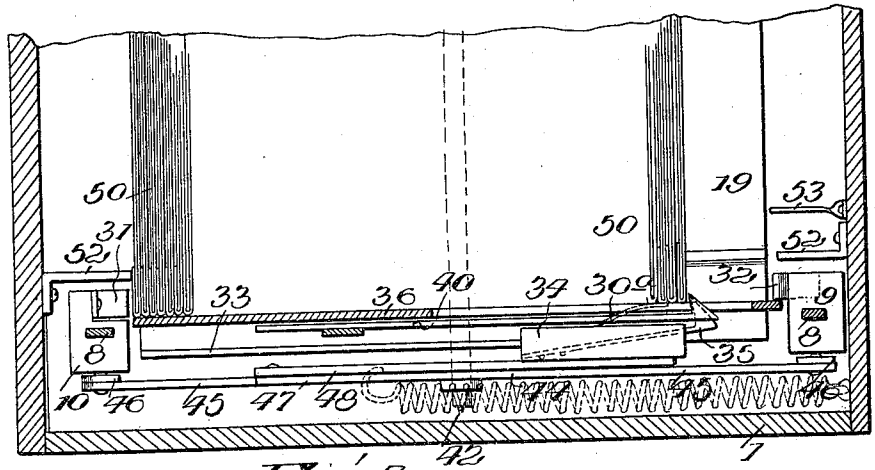

FIG. 4.

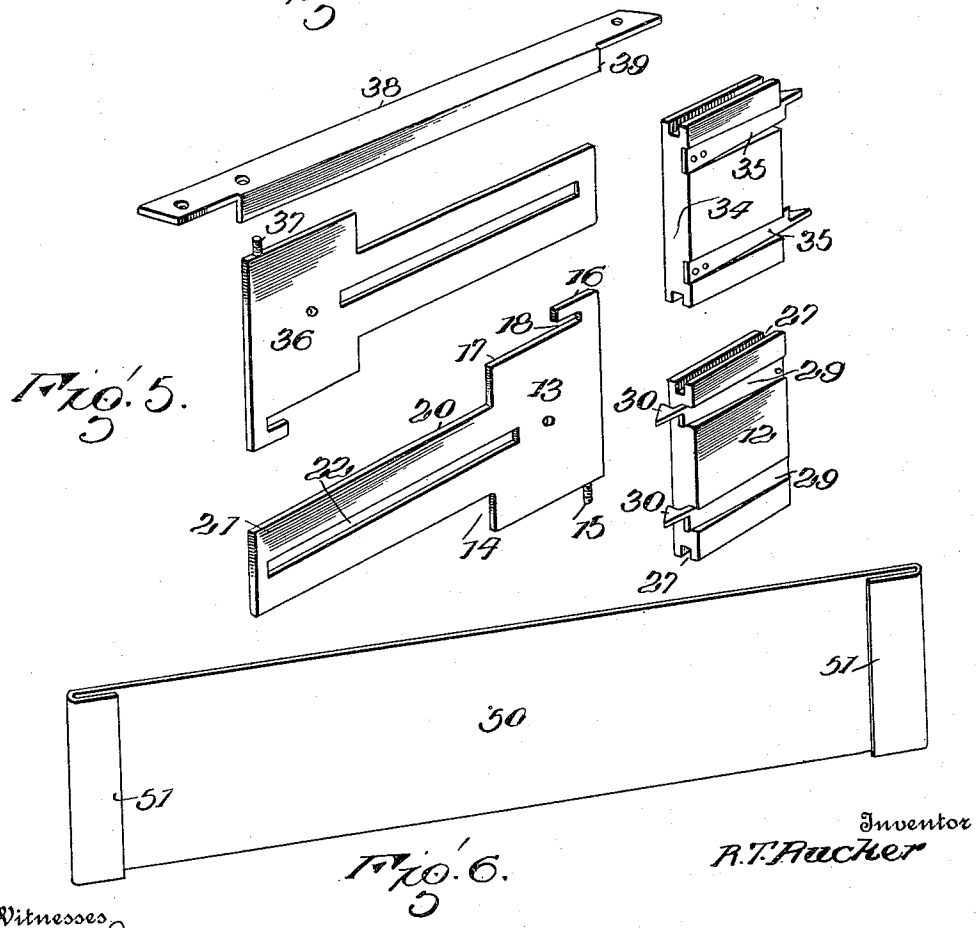

FIG. 5.

FIG. 6.

Inventor

R. T. Rucker

Witnesses

Jno Smirl

R. W. Bishop

By

Attorneys

UNITED STATES PATENT OFFICE.

ROBERT T. RUCKER, OF ANTIOCH, TENNESSEE.

STATION-INDICATOR.

1,146,207. Specification of Letters Patent. Patented July 13, 1915.

Application filed July 31, 1914. Serial No. 854,350.

To all whom it may concern:

Be it known that I, ROBERT T. RUCKER, citizen of the United States, residing at Antioch, in the county of Davidson and State of Tennessee, have invented certain new and useful Improvements in Station-Indicators, of which the following is a specification.

This invention relates to station indicators and has for its object the provision of a simple device which may be placed in a car and by the use of which stations along the line traveled by the car will be successively indicated so that passengers may be correctly informed as to the station that is being approached.

A further object of the invention is to provide a station indicator which may be used upon long or short routes without material change in the mechanism.

A further object of the invention is to provide a station indicator in which the names of the stations passed by the car will be displayed in proper order whether the car travels back and forth over a single line or travels in a loop so as to return to its starting point without twice following the same course.

All these stated objects, and such other incidental objects as will appear in the following description, are attained in the mechanism illustrated in the accompanying drawings and the invention resides in certain novel features which will be particularly pointed out in the claims following the description.

In the drawings, which illustrate the preferred embodiment of the invention, Figure 1 is a perspective view of the working parts, the inclosing frame or casing being omitted. Fig. 2 is an end elevation of the working mechanism with the casing in section. Fig. 3 is a transverse section with parts broken away. Fig. 4 is a horizontal section through one end of the device, the section being taken just above the horizontal center of the apparatus. Fig. 5 is a detail perspective view of the guides at the ends of the device and the horizontally moving slides or carriers which coact therewith. Fig. 6 is a detail perspective view of one of the name plates.

In carrying out my invention, I employ a casing 1 which may be of any desired form and construction and may be conveniently provided with a movable cover or top 2 to facilitate the placing of name plates in proper position therein and it is also provided on its front side with a sight opening 3 which is preferably glazed, as indicated at 4, and through which the names of the stations are to be read. Above this opening, the casing may be provided with a panel 5 containing any preferred legend, such as advertisements or some phrase which will indicate to the passengers that the name of the station being approached is displayed through the sight opening 3. In the bottom of the casing 1, I secure a base plate 6 which is preferably of cast metal but the material of which this plate is made may be varied at will. Upon the upper surface of this base plate is provided spaced ribs 7 which form tracks or supports upon which the name plates hereinafter described may slide. Adjacent the ends of this base plate and spaced from the end walls of the casing, I secure standards 8 upon which are mounted slides 9 and 10. Between the said standards 8, rails or ribs 11 are provided upon the base plate 6 and these ralis or ribs form guides or tracks for lower horizontally moving slides or carriers 12, as will be presently more particularly set forth. Adjacent the tracks 11, I secure to the base plate vertically disposed partitions or liners 13 which are cut away at their lower edges, as shown at 14 in Fig. 5, so as to accommodate the lower portions of the carriers 12. These partitions are provided with studs 15 by which they may be easily fitted in place upon the base plate 6 and at their upper edges they are provided with overhanging tongues or projections 16 which coact with the upper edges 17 of the partitions to form notches 18 adapted to receive the rear edge of a horizontal partition or floor 19. The upper edge of the partition 13 is cut away, as shown at 20, to accommodate the upper portion of the carrier or slide 12 and the cut away portions 14 and 20 produce an elongated longitudinally projecting tongue 21, as clearly shown in Fig. 5. A longitudinal slot 22 is formed in this tongue 21 to accommodate a plate holding latch 23 consisting of a spring plate having a hook shaped lug or projection 24 at its free end to extend through the slot 22, as shown. The opposite end of the latch is constructed with a fork 25 through the notch of which a securing screw 26 is inserted into the partition 13 so as to secure the latch in place.

This construction also permits the latch to be adjusted longitudinally so as to accommodate a greater or less number of name plates as may be desired. The carrier 12 is provided with grooves 27 in its upper and lower edges, the groove in the lower edge of the carrier engaging the track 11, as clearly shown in Fig. 1. The groove in the upper edge of the carrier engages a downturned lip or flange 28 at the end of the intermediate floor or partition 19 constituting a track or guide for the carrier, as shown in Figs. 1 and 2.

Secured upon the outer side of the carrier 12 are spring plates 29 having hooks or other retaining devices 30 at their front ends and these retaining devices are arranged to extend through the spaces provided by the cut away portions of the adjacent vertical partition 13 so as to engage the name plates in the operation of the apparatus. On the inner side of this carrier I secure the retainer springs 30^a which coact with the dogs 30 in the operation of the apparatus to keep the name plates upright while being shifted. The vertically moving carrier 10 is provided on its inner side with a yieldable plate engaging member 31 which is illustrated as consisting of a leaf spring having a hook, lip or other projection 32 at its upper end. In the operation of the apparatus, this plate engaging device will spring into engagement with the upper edge of the name plate to be moved and, upon its downward movement, will force said plate to a position immediately in rear of the sight opening 3 so that the name thereon may be read. In the upward movement of the said carrier, the engaging member will ride over the name plate until the projection on said member has cleared the upper edge of the plate. The carrier 9 is similar in construction and operation to the carrier 10 but the plate-engaging member 32 on the carrier 9 has its lower end free and is arranged to engage under the lower edge of a name plate to be raised. It will also be understood, by reference to the drawings, that the carriers 9 and 10 are in different horizontal planes when at rest, the carrier 9 being illustrated as at the upper end of the standard upon which it is mounted while the carrier 10 is at the lower end of the standard upon which it travels. The horizontal partition or upper floor is provided at its ends with upstanding ribs or flanges 33 which constitute tracks or guides for carriers 34 similar to the carriers 12. The plate engaging members 35 upon the carrier 34, however, are extended rearwardly instead of forwardly, as shown clearly in the drawings and especially in Fig. 5. A vertical partition 36 is provided above the floor or horizontal partition 19 and this partition 36 is similar in construction to the partition 13, in fact, identical in construction but inverted and turned end for end so that the longitudinal projecting slotted tongue will extend toward the rear of the apparatus and the tongue and notch which engage and serve to support the partition or floor 19 will be at the front side of the apparatus. The stud 37, carried by this upper partition 36, will be secured in a beam 38 which is rigidly secured to the upper ends of the standards 8 and extends between the same, said beam being provided with a depending longitudinal lip or flange 39 which constitutes the upper guide or track for the upper carrier 34. A latch 40, similar in construction to the latch 23, is secured upon the partition 36 and projects through the slot therein, this latch 40 having its free end disposed at the rear of the mechanism and being in effect a reversal of the latch 23. The floor or horizontal partition 19 is provided on its upper side with ribs or cleats 41 which constitute guides or rails upon which the name plates may travel.

Journaled in the depending flanges or lips 28 and extending longitudinally of the machine and projecting through one end of the casing is a rock shaft 42 which is equipped at its outer end with an operating arm or lever 43. Upon the shaft 42 between each end of the casing and the adjacent vertical partition, I secure a spider or many armed lever 44. This lever has forwardly and rearwardly projecting arms 45 to the outer ends of which are pivoted links 46, one of said links being carried downwardly and pivoted to the front carrier 10, while the other of said links is carried upwardly and pivoted to the rear carrier 9. The spider or lever 44 also has upwardly and downwardly extending arms 47 which are connected respectively by links 48 to the upper and lower carriers 34 and 12, as clearly shown. It will thus be readily seen that when the shaft 42 is rocked the carriers 9 and 10 will be moved in opposite directions and the carriers 12 and 34 will be simultaneously moved also in opposite directions. A spring 49 is secured at its front end to the upper arm 47 and at its rear end to the back of the casing so as to act upon the spider or many-armed lever in opposition to the handle or operating lever 43.

The names of the stations are printed, embossed or otherwise displayed upon separate name plates 50 which may be of any material but will be preferably made of metal for the sake of durability. These name plates are of such dimensions as to fit in an upright position upon the base 6 or the floor 19 between the vertical partitions so that when a number of the plates have been placed in the machine they will be supported against endwise movement or twisting. Each name plate carries the name of one station and the plates are to be arranged in

an order corresponding exactly with the order of the stations along the line traveled by the car so that if the plates be successively moved into position behind the sight opening the names of the stations will be displayed in the same order as the stations are successively reached. The plates are doubled on themselves at their ends thereby forming flanges or offsets 51 which constitute spacers whereby the adjacent plates are held out of contact and in position to be readily engaged by the several carriers. The vertical end partitions will project beyond the front and rear edges of the floor 19 a distance equal to the thickness of one name plate and guides 52 will be secured upon the front and rear walls of the casing so as to prevent falling of the name plates as they are moved vertically past the edges of the said floor 19, the inner edges of these guides being spaced from the adjacent edges of the said floor a distance equal to the thickness of one name plate, as will be readily understood. A retaining or keeper spring 53 is also secured to the back wall of the casing and this spring will bear upon the plate raised by the carriers 9 so as to prevent dropping of the same and support it in position to be engaged by the horizontally movable carriers 34. A similar retaining device secured to the front wall of the casing will prevent premature dropping of the front name plate in the upper tier or row of plates by frictionally engaging the same.

It is thought the operation of the apparatus will be readily understood from the foregoing description, taken in connection with the accompanying drawings. The plates having been arranged in the proper order they are placed upon the floor 19 and the base plate 6 in vertical position and the latches 23 and 40 are adjusted so as to retain the plates against falling. The apparatus is operated through the medium of the handle or lever 43 and this lever or handle may be actuated in any convenient manner. It may be manipulated by the brakeman or some other member of the train crew but in actual use generally will be operated mechanically or automatically through trip devices which it is not necessary to explain at this time. The drawings show the position of the parts just after the lever 43 has been swung forward. Upon release of the lever, the spring 49 will act upon the spider 44 so as to rock the shaft 42 in the direction reverse to that given it by the lever 43. The carriers 9 will be thereby moved to the lower ends of the standards on which they are mounted, while the carriers 10 will at the same time be moved upwardly. The upper carriers 34 will also be moved rearwardly while the lower carriers 12 will be moved forwardly. The name plates will be placed in such position upon the respective floors that the lower tier of plates will extend to the rear edge of the vertical partitions and, consequently, when the carriers 9 are moved downwardly the plate engaging devices 32 mounted thereon will engage the lower edge of the rearmost name plate. The upper tier of name plates will terminate at the front edge of the vertical end partitions and, consequently, when the carriers 10 have been moved upwardly the engaging members 31 mounted thereon will engage over the upper edge of the foremost name plate. The carriers 12 on their forward movement will be brought to the front of the tier of plates and the plate engaging members or dogs mounted on said carriers will engage the ends of the plate viewed through the sight opening. At the same time, the upper carriers 34 will have been caused to engage the end edges of the plate which had been previously raised by the carriers 9. As the car leaves the station, the operating lever or handle 43 will be actuated and the several slides then moved so that the plate which has been displayed will be moved rearwardly past the latches 23 and the foremost plate of the upper tier will be brought into position behind the sight opening and thereby display the name of the next station reached by the car. At the same time the carriers 9 will raise the rearmost plate of the lower tier of plates while the previously raised plates will be engaged by the carriers 34 and moved forwardly in advance of the latches 40. The bringing of this plate to a position in advance of the latches 40 will force the entire tier of plates forward a distance equal to the thickness of one plate so that upon the next upward movement of the carriers 10 said carriers will engage the foremost plate of the tier to move the same into place behind the sight opening upon the next operation of the device. In like manner the lower tier of plates will be moved rearwardly so that the rearmost plate will always be in position to be engaged by the carriers 9. The free ends of the retaining springs 30^a on the inner sides of the slides 12 and 34 are spaced from the dogs 30 a distance equal to the thickness of one name plate with the offset at the end thereof. Therefore, when the said slides are moved outwardly and the dogs engage over the ends of a name plate, the ends of the springs 30^a will bear against the face of the plate which will be thereby held upright as it is moved to the tier of plates. As the carrier moves past the ends of the plates in the tier, the springs 30^a will be compressed against the carrier by the plates which are at rest and thereby released from engagement with the plate being moved. The springs will be held in this compressed state until the carrier again moves outward to shift another plate which

movement will take the springs beyond and free them of the tier of plates.

Should the car travel over the same route in both directions the name plates will be provided in duplicate, the plates initially placed in the lower tier being arranged in reverse order to those placed in the upper tier but if the car diverges upon its return trip the name plates will be correspondingly varied. It will be readily noted that no material change is needed to apply the device to any route and the only manipulation needed is to properly arrange the name plates. Should the route be a short one it will be necessary to adjust the retaining latches 23 and 40 near the back and front respectively of the casing and it may be, also, necessary to vary the throw of the many armed lever or spider 44 and for this purpose I provide a series of openings 54 in the upwardly and downwardly extending arms of the spider so that the links 48 may be connected to the same in such manner as to impart the requisite throw thereto. The device is compact in its arrangement and simple in the construction of its parts and the working mechanism is protected against injury and also so disposed to be out of the path traveled by the name plates or station displaying members so that the names of the stations will be successively brought into view and the distance between the stations will not affect the operation of the apparatus.

Having thus described the invention, what is claimed as new, is:—

1. In a station indicator, the combination of a support, a row of independent name plates arranged on said support, means for removing the name plates singly from the support, means for feeding name plates singly to the support, reciprocatory slides at the ends of the support adapted to engage the name plate fed to the support and move said name plate to the row of name plates and then move the row of name plates toward the point of removal, and means at the ends of the support to engage the rearmost name plate and prevent retrograde movement and falling of the row of name plates.

2. In a station indicator, the combination of upper and lower supports, vertical partitions arranged at the ends of said supports and having longitudinally disposed horizontal slots, vertical supports arranged adjacent the said partitions, a plurality of independent name plates arranged upon the supports, vertically movable carriers mounted upon the vertical supports and provided with plate-engaging members adapted to respectively engage the upper edge of the foremost upper name plate and the lower edge of the rearmost lower name plate, carriers slidably mounted adjacent the partitions to move horizontally, plate-engaging members mounted on said carriers and projecting through the slots in the partitions to engage the name plates upon the respectively adjacent supports, and means for simultaneously actuating the several carriers.

3. The combination of a base plate, standards thereon, beams connecting the upper ends of the standards and provided with longitudinally extending depending tracks, end walls erected upon the base plate, upstanding tracks on the base plate adjacent said end walls, a floor supported by said end walls, depending and upstanding tracks at the ends of said floor and adjacent the said end walls, independent name plates disposed upon the floor and the base plate, vertically movable carriers mounted upon the said standards, horizontally movable carriers having their upper and lower edges engaging said tracks, and means for simultaneously actuating all of said carriers.

4. The combination of upper and lower supports, upstanding and depending flanges constituting tracks at the ends of each of said supports, a plurality of independent name plates arranged in upright position upon each of said supports, carriers having grooved upper and lower edges engaging said tracks, resilient dogs carried by the said carriers and adapted to engage the name plates upon the adjacent supports, and means for actuating said carriers whereby to move the name plates over the supports.

5. The combination of upper and lower supports, a plurality of independent name plates arranged in upright position upon each support, horizontally movable carriers arranged at the ends of the supports, dogs carried by said carriers and adapted to engage the name plates, and retaining springs secured upon the said carriers and having their free ends spaced from the said dogs to engage the inner face of a name plate engaged by the said dogs, and means for actuating the carriers.

6. The combination of upper and lower supports, end walls adjacent the ends of said supports, a plurality of independent name plates arranged in upright position upon each of the supports, latches mounted on the said end walls between the front and rear edges thereof and engaging the name plates to retain them in upright position upon the supports and lock them against retrograde movement, carriers mounted adjacent said end walls, plate-engaging members on said carriers, means for actuating said carriers whereby a plate may be moved past the latches and be engaged by the same, and means for transferring name plates successively from one to the other support.

7. In a station indicator, the combination of a support, end walls, a plurality of in-

dependent name plates arranged on said supports between the end walls, reciprocatory slides adapted to engage the name plates and move the same over the support, and adjustable latches mounted on the end walls and adapted to engage the name plates to prevent falling and retrograde movement thereof.

8. In a station indicator, the combination of a support, end walls having longitudinal slots, a plurality of independent name plates arranged on said support between the end walls, reciprocatory slides adapted to engage the name plates and move the same over the support, resilient latches having their free ends projecting through the slots in the end walls to engage the name plates and provided at their opposite ends with longitudinally extending forks bearing against the outer faces of the end walls, and fastening devices inserted through said forks to adjustably secure the latches to the end walls.

9. The combination of a support comprising a base, a floor spaced vertically from the base and beams spaced vertically from the floor at the ends thereof, depending tracks on said beams, upstanding tracks on the base, depending and upstanding tracks at the ends of the floor, end walls secured between the base and the floor and having their upper and lower edges cut away at their forward ends, end walls secured between the floor and said beams and having their upper and lower edges cut away at their rear ends, horizontally movable slides having their upper and lower edges engaging said tracks, resilient dogs carried by the said slides and having their free ends projecting through the cut away portions of the respectively adjacent end walls, and means for actuating said slides.

In testimony whereof I affix my signature in presence of two witnesses.

ROBERT T. RUCKER. [L. S.]

Witnesses:

PERCY HARWOOD,

ALLAN WELBURN.

Copies of this patent may be obtained for five cents each, by addressing the "Commissioner of Patents, Washington, D. C."