C. W. COOK.

GATE OR DOOR HINGE.

APPLICATION FILED JULY 30, 1908.

924,430.

Patented June 8, 1909.

Fig. 1.

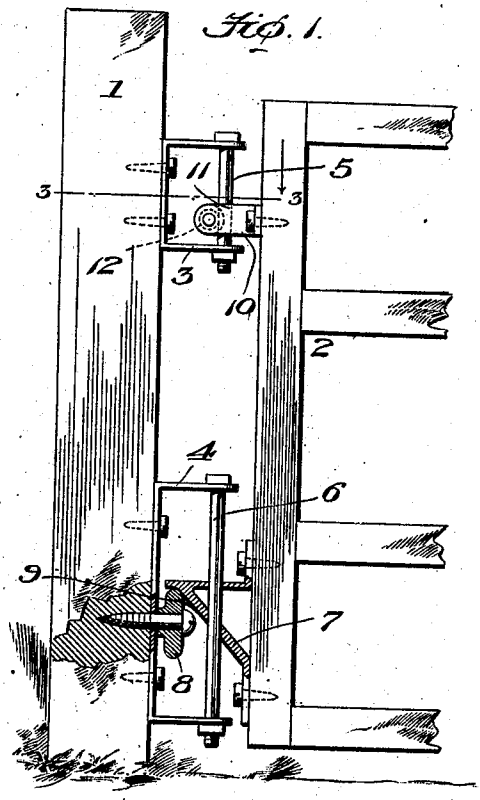

Fig. 2.

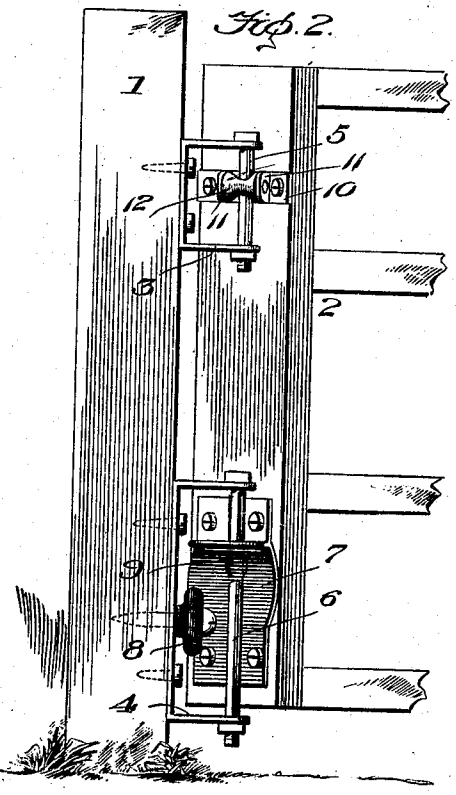

Fig. 3.

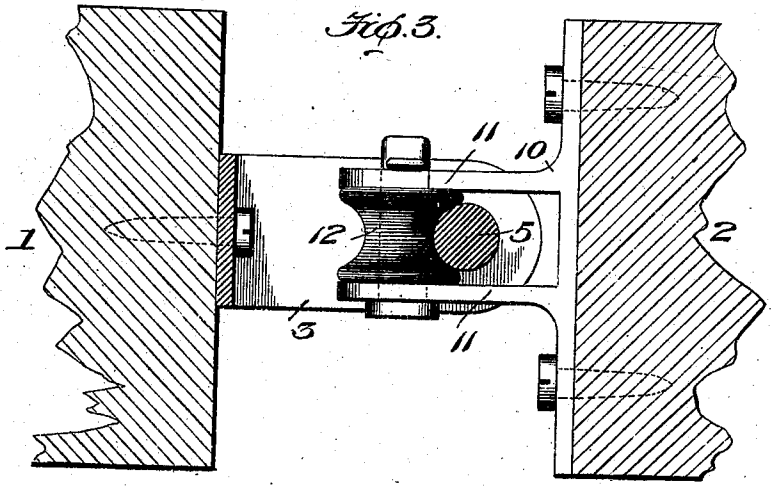

Witnesses

Geo. H. Hankin

Inventor

Christian W. Cook

By Henry N. Cobb

his Attorney

THE NORRIS PETERS CO., WASHINGTON, D. C.

UNITED STATES PATENT OFFICE.

CHRISTIAN W. COOK, OF PROVO CITY, UTAH.

GATE OR DOOR HINGE.

No. 924,430. Specification of Letters Patent. Patented June 8, 1909.

Application filed July 30, 1908. Serial No. 446,101.

To all whom it may concern:

Be it known that I, CHRISTIAN W. COOK, a citizen of the United States, residing at Provo City, county of Utah, and State of Utah, have invented certain new and useful Improvements in Gate or Door Hinges, of which the following is a specification.

My invention relates to gate or door hinges and is an improvement on the gate hinge shown in my Patent #869,553, dated October 29, 1907.

The present invention has for its object the provision of a novel anti-friction sliding hanger to take the place of the plain sliding hanger on the hinge of my aforesaid patented construction whereby the weight of the gate or door is sustained by the anti-friction hanger and the gate or door is rendered adaptable for very easy opening or closing without tendency to creak, in addition to which the parts are subjected to the minimum wear.

The invention is set forth fully hereinafter and the novel features are recited in the appended claim.

In the accompanying drawings:—Figure 1 is a side elevation, partly in section of the invention applied to a gate; Fig. 2, a similar view showing the gate open; and Fig. 3, an enlarged detail section on line 3—3 of Fig. 1.

The invention is illustrated and described as applied to a gate but it is just as well adapted for use on doors or other swinging objects.

The fence post is shown at 1 and the gate at 2.

Two pintles and two leaves may be employed, as shown, or a single leaf and pintle, and the parts may be arranged in reverse relation to their disposition as illustrated. The leaves 3 and 4 are secured by suitable fastenings to the fence post, said leaves having pintles 5 and 6.

Secured to the rear edge of the gate is an inclined bearing plate 7 which has the function of the inclined plate in my patented construction, a roller 8 carried by a screw projecting through the plate 4 bearing against the inclined plate 7, the plate being provided, if desired, with a depression 9 to receive the roller 8 and hold the gate in closed position. This depression could be placed elsewhere, according to the position in which the gate is desired to remain. The pintle 6 passes loosely through openings in the inclined plate 7 and the leg thereof, said pintle sustaining the inward pressure of the heel of the gate.

Secured to the upper part of the rear edge of the gate at a suitable point is a hanger bracket 10 having arms 11 between which is located a concave roller 12 which is journaled on a shaft or cross-piece connecting the arms 11 or may be otherwise suitably journaled to said arms. The arms 11 straddle the pintle 5 and the roller bears against the said pintle. As the tendency of a gate or door is to sag at its toe, to push inwardly at the lower part of its heel, and to pull outwardly at the upper part of its heel, the roller 12 practically sustains the weight of the gate. As the gate opens in either direction, it rises, the roller 12 passing upwardly on the pintle 5 and the plate 7 rising on the pintle 6 on account of the engagement of the inclined plate with the roller 8. The weight of the gate being practically wholly sustained by the roller, the friction is very small and consequently the gate opens and closes easily and will not creak or catch.

Having thus described my invention, what I claim as new and desire to secure by Letters Patent, is:—

Means for hinging gates, doors, or the like, consisting of a lower hinge composed of a pintle secured to the gate post, a roller secured to the gate post, and an inclined bearing plate secured to the rear edge of the gate above the bottom thereof and journaled on the pintle, and an upper hinge composed of a pintle secured to the gate post, and a hinge member secured to the gate and straddling the pintle and having a grooved roller engaged with and adapted to move lengthwise of said pintle.

In testimony whereof, I hereunto affix my signature in presence of two witnesses.

CHRISTIAN W. COOK.

Witnesses:
HARVEY CHEFF,
ALFRED L. BOOTH.