May 1, 1934. G. J. P. J. J. BRUN 1,956,612

FUEL INJECTION PUMP FOR INTERNAL COMBUSTION ENGINES

Filed March 27, 1933 2 Sheets-Sheet 1

Fig. 1

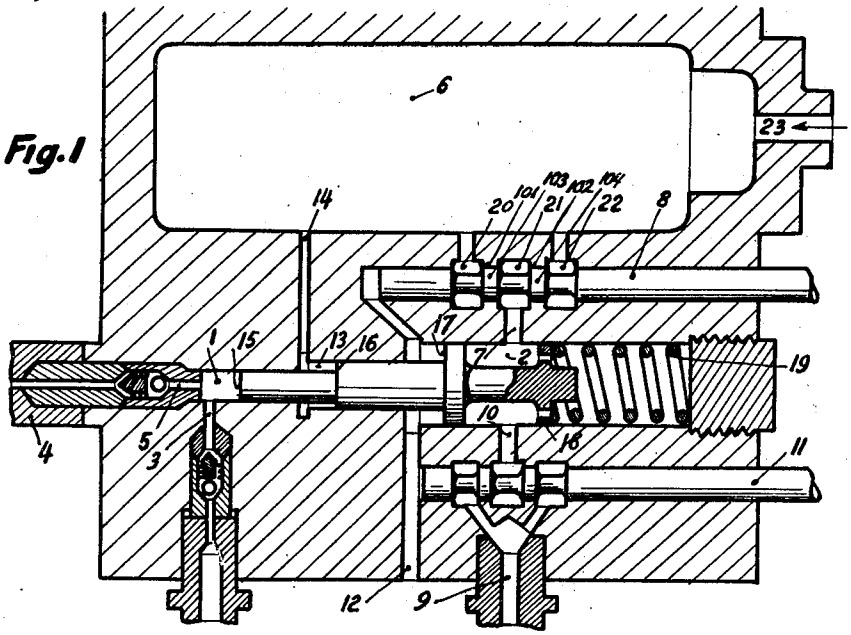

Fig. 2

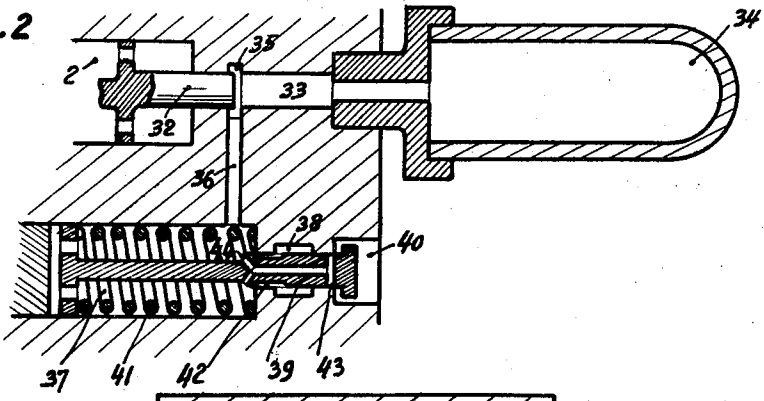

Fig. 4

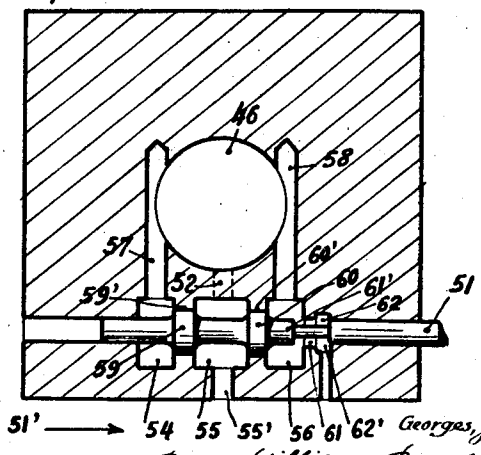

Inventor:
Georges, Jean-Pierre, Jules, Joseph. Brun.
By Williams, Bradbury, McCaleb & Hinkle.
Attys.

May 1, 1934. G. J. P. J. J. BRUN 1,956,612

FUEL INJECTION PUMP FOR INTERNAL COMBUSTION ENGINES

Filed March 27, 1933 2 Sheets-Sheet 2

Fig. 3

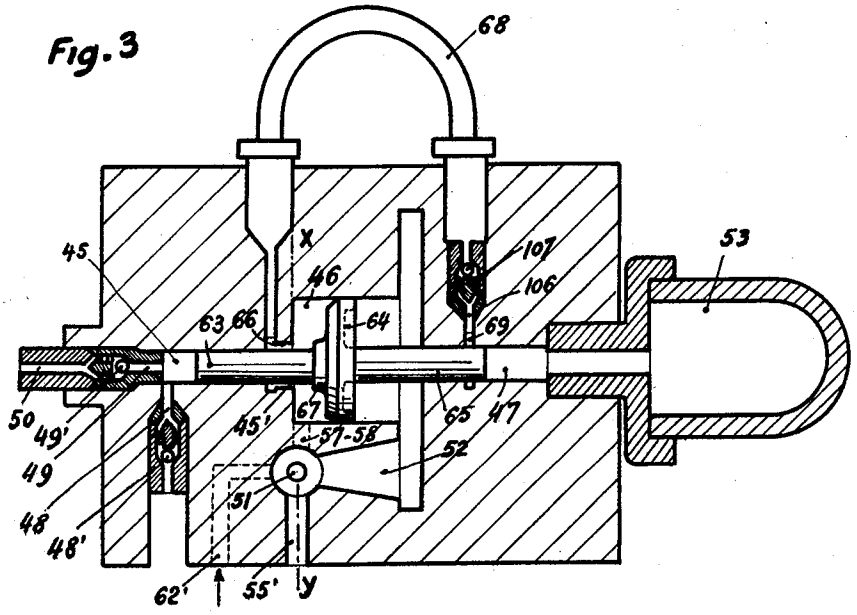

Fig. 5

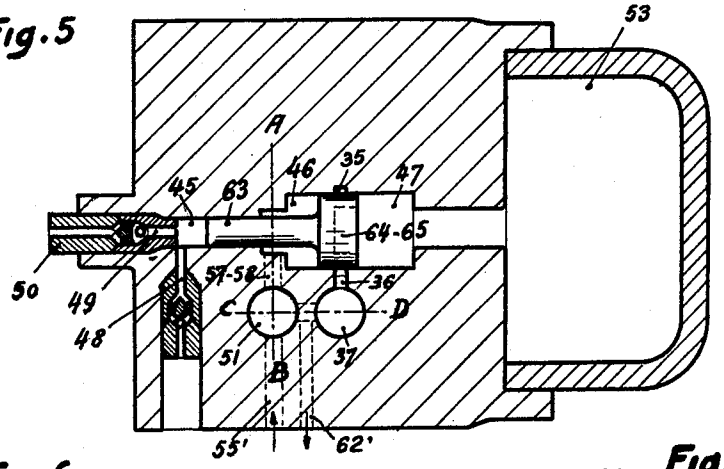

Fig. 6

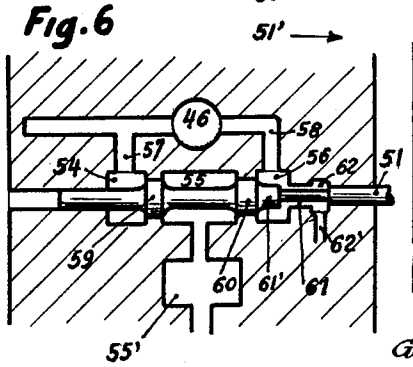

Fig. 7

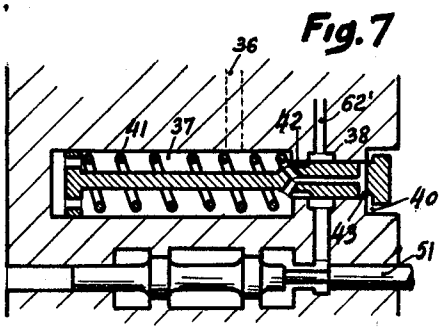

Inventor:
Georges, Jean-Pierre, Jules, Joseph Brun

By Williams, Bradbury, McCaleb & Hinkle.
Attys.

Patented May 1, 1934 1,956,612

UNITED STATES PATENT OFFICE

1,956,612

FUEL INJECTION PUMP FOR INTERNAL COMBUSTION ENGINES

Georges Jean Pierre Jules Joseph Brun, St.-Etienne, France, assignor to Societe d'Etudes & d'Exploitation du Generateur a Piston Libre, St.-Etienne, France, a corporation of France

Application March 27, 1933, Serial No. 662,900
In Germany March 30, 1932

18 Claims. (Cl. 103—50)

This invention relates to a pump for the injection of liquid fuels into Diesel engines of the type provided with a mechanical injection, which is suitable for use with the highest injection pressure and with the heaviest liquid fuels.

The principle of injection pumps mechanically driven by a cam or an eccentric is well known; the piston of the pump travelling at full speed, a discharge orifice is suddenly closed and then uncovered. In the interval between these two operations, the liquid fuel is violently forced through the injector connected to the pump body by a pipe. An automatic delivery valve shuts off the pipe from the pump body between the injection stages.

Mechanically driven pumps of this type present serious difficulties which will be briefly described:

1. In the first place, the time of injection is so short that in spite of the relatively small amount of work involved by injection, the instantaneous torque of the pump involves a considerable increase. Consequently, the cam shafts driving the pumps, as well as the driving gear wheels, must be of considerable dimensions.

2. The duration of the injection is so small that in a multi-cylinder engine of any length, it is less than the time taken by the torque to spread in the cam shaft from the driving gear wheel to the more distant cams of the said gear wheel; this results in torsional vibrations which reduce the efficiency of the transmission, strain the cam shafts and wear out the driving gear wheels.

3. The driving of the pumps by a cam shaft fixes their place on a given line and makes it necessary to insert a fairly long pipe between the injectors and the pump. This pipe causes considerable losses of head. On the other hand, the time taken by a wave of transmitted pressure travelling and returning in these pipes from the pump to the injector, is generally of the same order of magnitude as the time of the injection. But the pressure wave generated at the pump, undergoes a partial reflection at the sprayer or jet if the latter is not perfectly adapted to the pipe (that is to say calculated so as to pass the quantity carried by the wave under the pressure carried by the same wave).

This reflected wave is reflected by the delivery valve of the pump and returns to the sprayer or jet where, after the principal injection, it causes the introduction into the cylinder, at pressures insufficient to ensure efficient spraying or atomization, of quantities of fuel which are often considerable. The result of this is an incomplete combustion with all the well known drawbacks.

4. Finally, the mechanical drive leads to limiting the piston speeds of the pump to small values (1 to 1.5 m. per second) so that in order to limit leakages at the piston during the injection, the pistons and the jackets have to be adjusted with an accuracy of a micron. This means costly construction, and the least wear makes the pumps unusable.

These difficulties have been experienced by all builders of pumps with mechanical injection, and are more particularly noticeable in high speed engines, in large bore engines and in engines with highly viscuous fuels, which are practically the most economical. This is the reason why the injection pressures of the pumps at present known do not exceed 600 kgs. per sq. cm. which pressure is insufficient to penetrate with one or even two injectors a combustion chamber of large bore. Owing to these difficulties, it has been found necessary to use relatively light and costly fuels in engines with mechanical injection, and generally speaking these difficulties limit to a considerable extent the field of application of these engines which are otherwise so important.

The application of mechanical injection to high speed engines, to large bore engines and to engines using very heavy oils, is conditioned by the construction of a pump arranged in direct proximity to the injector and driven at the moment of the injection by a source of energy arranged in direct proximity to the pump.

This latter condition led some manufacturers to drive the piston at the moment of the injection by a spring slowly cocked in the interval between two injections by a cam or some other mechanical means and suddenly and violently uncocked at the moment of injection. These pumps are free from the drawbacks mentioned above in paragraphs 1 and 2, but still have the drawbacks mentioned in paragraphs 3 and 4. Moreover, calculation shows that the weight and the overall dimensions of the springs required for storing the work of injection are considerable. These springs must moreover expand at a reduced speed if it is desired to avoid during the uncocking abnormal strains through unequal working of the different parts of the metal. Finally the sudden expansion of these very voluminous springs causes considerable shocks in the bed or frame of the engines.

In the pump according to this invention, the mechanical drive is replaced by a hydraulic drive, the hydraulic energy required for producing the injection being obtained by the expansion of a compressible liquid such as, for instance, oil

which is highly compressed in a tank during the interval between the injections. For this purpose, the compressor piston is constituted by a movable set, part of which forming the driving or motor piston is driven during the injection stroke by the expansion of this liquid. The same set comprises a return piston which, after the injection, is exposed to a constant and adjustable hydraulic pressure which ensures the return against the action of an elastic device such as for instance a spring or a recuperator with compressible liquid, this spring or this recuperator opposing to the movable set a reaction which increases in linear proportion to the function of the travel in such a manner that this travel is regulated in accordance with the value of the constant pressure applied to the return piston.

There are several methods of combining these various elements, and two constructions will be described by way of example, with two variants of each of these constructions.

Figure 1 shows a general arrangement of the first construction.

Figure 2 is a partial section of a variant of the first construction, showing the recuperator with compressible liquid and the mechanism for recharging the recuperator.

Figure 3 is a general arrangement of the second construction.

Figure 4 is a section through the vertical plane X—Y of this pump, showing the distribution valve.

Figure 5 is a general arrangement of a variant of this second construction.

Figure 6 is a section through the vertical plane A—B of this latter pump showing the distribution valve, and

Figure 7 is a section through the vertical plane C—D showing the mechanism for recharging the recuperator.

The first construction is characterized by the fact that the accumulator which stores, in the interval between two injections, the compressible energy expended for producing the injection, is fed directly from a source of oil of constant pressure.

It will be seen in Figure 1 that the body of the pump is constituted by two concentric cylinders, the compressor cylinder 1 and the motor cylinder 2. The compressor cylinder is in communication with the liquid fuel suction through the orifice 3 closed by an automatic valve, and with the sprayer or jet through an orifice 5 closed by an automatic delivery valve. The motor cylinder 2 is in communication with the tank 6 containing oil under pressure through the orifice 7 and through the chamber of the admission valve 8. It communicates with the exhaust pipe 9 through the orifice 10 and the chest or chamber of the exhaust valve 11. The orifices 7 and 10 open in the lateral wall of the motor cylinder 2 beyond the extreme right hand position of the piston. The end of the cylinder 2 on the left of the driving piston, and the left hand face of the driving piston are in open communication with the atmosphere through the drain orifice 12. Between the bores of the cylinders 1 and 2, the bore 13 which is in open communication through the orifice 14 with the tank 6, constitutes the so-called return cylinder, the object of which will be hereinafter described.

The movable set of the pump is constituted by the compressor piston 15, return piston 16 and driving piston 17, all three of which are formed in one integral part; the piston 17 being connected by a rod to an obturator disc 18 which, at the end of the injection travel, closes the admission orifice 7. The spring 19 tends to bring the movable set to the left at the end of the stroke. The seat for the admission valve 8 is constituted by three concentric cylindrical chambers 20, 21, 22. The central chamber 21 is in communication with the motor cylinder through the orifice 7. The two end chambers 20 and 22 are in communication with the tank 6. The balanced cylindrical or piston valve 8 is constituted by a rod with three circular grooves, fitted into the bores 101, 102 which separate the three chambers 20, 21, 22. In the closing position, the grooves are separated from each other by the collars 103, 104 of the rod 8, which exactly fit the bores 101, 102. The opening of the valve is produced by a longitudinal movement of the said valve which disengages the collars 103, 104 from the bores 101 102.

The construction and the working of the exhaust valve 11 are absolutely identical.

The operation of the pump is as follows:

In the interval between two injections, the admission valve 8 is closed, and the exhaust valve 11 open. The motor cylinder 2 is connected to the exhaust. Under the action the pressure of the oil of the tank 6 on the return piston 16, the movable set moves from left to right, whilst liquid fuel is being drawn into the compressor cylinder 1 and the oil, admitted at the preceding injection into the motor cylinder 2, escapes through the conduits 10 and 9. The return movement is braked, so as to be prolonged during the greater part of the time interval comprised between two injections, this result being obtained in a very simple manner by limiting the diameters of the admission orifice 14 of the return cylinder 13 and of the exhaust orifice 10 of the motor cylinder 2. The movable set stops when the pressure on the return piston 16 is balanced by the reaction of the spring 19. It is this position which regulates the quantity of fuel injected, and, therefore, the charge of the Diesel engine. The fuel quantity injected is ultimately varied by varying the pressure in the oil tank 6.

During the return stroke of the piston 15, the tank 6 containing oil under pressure is recharged, the oil being admitted through the pipe 23 which opens into the source of oil under constant pressure (for instance a pump with multiple pistons delivering into a large accumulator which stabilizes the pressure). At the end of the return stroke, the pressure in the tank 6 becomes again equal to the pressure at the source.

The injection is released by the sudden closing of the exhaust valve 11 followed by the opening, also very rapid, of the admission valve 8.

Due to the action of the oil under pressure in the tank 6, acting on the right hand face of the motor piston 17, the movable set quickly attains such a speed that the pressure opposed by the sprayer or jet 4 to the escape of the fuel delivered through the orifice 5, balances the pressure acting on the motor piston. The oil admission orifices in the motor cylinder 2 are made sufficiently large to ensure that the loss of head at the admission should be small for the normal speed of working. During this phase, which is of very short duration, nearly the whole of the volume of oil admitted into the motor cylinder 2, is supplied by the expansion of the oil stored in the tank 6 under a very high pressure (for instance 600 kgs. per sq. cm.)—(without this accumulator, it would be necessary to make the pipes 23 of a dis-

portionately large diameter in order to ensure that they should deliver the quantity of oil admitted into the cylinder 2, during the very short time that the injection lasts, without a considerable depression being produced). The pressure of the tank 6 drops, therefore, during the injection, and the pressure of injection at 2 correspondingly decreases. The decrease of pressure depends substantially on the volume of the tank 6, and with a fairly large tank, can be very considerably reduced.

The injection ceases when the return piston 16 strikes the end of the return cylinder 13. Just previous to this, the speed of the piston decreases owing to the partial closing of the admission orifices by the obturator 18, and this speed is reduced sufficiently to ensure that the expulsion of the layer of oil comprised between the return piston 16 and the end of the cylinder 13 should deaden the remaining kinetic energy.

Moreover, the weight of the movable set 15, 16, 17, 18 can be reduced to a few grams per kilogrammeter of energy spent at the injection. Under these conditions, the acceleration and the retardation of the set during its injection stroke, last only a few hundredths of the total duration of the injection. It is absolutely useless to provide, as in the case with mechanically driven pumps, for sudden closing and opening of the discharge orifices at the beginning and at the end of the injection. The initial and final shocks produced in the frame of the engine by the movements of the set are insignificant.

It is however necessary to provide for a slight braking of the movable set during the injection stroke, this braking being accentuated at the end of the said stroke so as to provide for the contingency that as the compressor cylinder 1 has not been filled with liquid fuel during the suction stroke, the pressure on the motor piston would not be balanced by the pressure of the fuel delivered. Calculation shows that it is sufficient to regulate the oil admission orifice in the cylinder 2 in order that it should produce in normal working a loss of head equal to 5% of the admission pressure in order to avoid any dangerous shock at the end of the injection stroke, on the assumption that suction has failed.

The admission valve 8 and the exhaust valve 11 may be driven in any suitable well known manner.

A variant of the first construction will now be described, which consists in that the spring 19 is replaced by a compressible liquid recuperator. As a matter of fact, there is the difficulty in calculating a pump with regulation by a spring so that the initial acceleration and the final retardation of the movable set have a very high value. To take a concrete example, this value may exceed 100,000 in a pump with a stroke of 20 millimeters per second and with a mean piston speed of 8 m. per sec. during the injection. Such accelerations give rise to very high inertia efforts in the return spring which in time must deform it. But as this spring is used for the regulation, it must be as constant as possible. In practice, the first construction is suitable only for pumps with a piston speed not exceeding 3m./sec. The difficulty is avoided by replacing the spring 19 of Figure 1 by a compressible liquid recuperator which constitutes a spring without any appreciable inertia and which cannot get out of order.

Figure 2 shows in partial section a pump of this type, the section showing the end of the motor cylinder of the pump. It will be seen that, instead of the spring 19 of Figure 1, the movable set comprises a counter-rod 32 which forms the piston in a cylinder 33 concentric with the motor cylinder and communicating with a chamber 34. The reciprocation of the movable set produces the compression and the expansion of the oil enclosed in the chamber 34 and in order that the whole unit should not contain any constant spring, it is sufficient to provide a means for refilling the recuperator which compensates for the leakages and keeps the pressure constant when the piston is in a given position, for instance at the end of an injection stroke. For this purpose the circular groove 35 provided in the wall of the recuperator cylinder 33 is in communication through a passage 36 with the constant pressure chamber 37, when the counter-rod 32 is in the position corresponding to the end of the injection stroke.

This chamber is fed with oil under pressure by a "pressure controller" 39 which, as will be explained, regulates the pressure to a constant value lower than the minimum value of the pressure of the distribution. The chamber 37 is separated from the chamber 38 which communicates with the oil admission through a bore in which slides the pressure controller 39. The latter is constituted by a piston exposed on the one hand to the pressure of the chamber 37 and on the other hand to the antagonistic reaction of the spring 41. When the reaction of the spring predominates, that is to say when the pressure in the chamber 37 becomes smaller than the normal working value, the piston slides to the left and the straight grooves 42 provided in the piston, which in any position of the latter open into the chamber 38, are uncovered at their left hand end by the bore which separates the chambers 37 and 38, and communicate with the chamber 37. Oil passes from the chamber 38 into the chamber 37 through the said grooves 42. The pressure consequently increases. In the opposite case, when the pressure in the chamber 37 predominates over the reaction of the spring, the piston slides to the right, and the orifice 43, in communication with the chamber 37 through the holes 44 and conduit 44', open into the chamber 40 which is freely open to the atmospheric pressure. The oil escapes through the orifices 43 and the pressure in chamber 37 falls.

In the drawings, the pressure controller is shown in the neutral position (the groove 42 and the orifice 43 being simultaneously closed). If the travel which, starting from this position, effects uncovering either of the grooves 42 or of the orifices 43, is a small fraction of the chamber of the spring 41, the pressure in the chamber 37 will be maintained practically constant.

A second construction will now be described, characterized in that the compressed oil tank which feeds the motor cylinder during the injection is isolated from the source of constant pressure oil and works as a recuperator limiting the return stroke. The oil under pressure is then admitted only into the return cylinder and the injection is produced by connecting this cylinder to the exhaust. Two variants will be described which differ in the means employed for recharging the recuperator.

Figure 3 shows in section a general arrangement of the first variant. The pump body is constituted by three concentric cylinders: the compressor cylinder 45, the return cylinder 46 and the recuperator cylinder 47. The compressor cylinder 45 is in communication with the suction

through the orifice 48 (closed by an automatic valve 48') and with the injector 50 through the orifice 49 (closed by an automatic valve 49'). The left hand end of the bore of the return cylinder 45 is in communication through a valve 51 (Figure 4) with the admission and exhaust. The right hand end is in open communication with the exhaust through the orifices 52 which open into the exhaust chamber of the valve 51. The recuperator cylinder 47 is in communication with the tank 53.

In Figure 3, the valve is shown in section at right angles to the axis, but it must be pointed out that the conduits or passages leading from it are not all in communication with one another. They open on the contrary as indicated in Figure 4 into different chambers of the valve and are in communication according to the position which is assumed by the valve.

Figure 4 shows a section X—Y through the axis of the valve. The seating of the valve comprises three concentric chambers 54, 55, 56. The central chamber 55 is in open communication with the exhaust through the passage 55', the end chambers 54 and 56 are in open communication with the cylinder 46 through the holes 57 and 58 (which open in the lateral wall in direct proximity to the cover or end). In the position indicated in Figure 4, the two pistons 59 and 60 carried by the rod of the valve engage with the bores 59' and 60' which separate the three chambers 54, 55, 56, and the cylinder is shut off from the exhaust. In this position, the circular groove 61 machined in the rod of the valve, connects the chamber 56, and therefore, the cylinder 46, to the circular groove 62 into which the oil admission pipe 62' leads. The opening of the exhaust is produced by a longitudinal movement of the valve in the direction of the arrow 51'. During this movement, the admission is first closed by the collar 61' which closes the bore separating the chamber 56 from the groove 62. The pistons 59 and 60 are thereupon disengaged from the intermediate bores, so that the chambers 54 and 56 are connected to the chamber 55.

The operation of the pump is as follows:

In the interval between two injections, the valve is in the admission position. Oil is admitted at 46 into the return cylinder on the left hand face of the return piston 64 through a narrow orifice. The diameter of this orifice is calculated so that the speed of the piston may be limited to such an extent that the return stroke will continue practically during the whole time comprised between two injections. The movable set 63—64—65 moves from left to right, the compressor piston 63 drawing through the orifice 48 and the recuperator piston 65 compressing the oil stored in the tank 53. The movable set stops when the admission pressure on the return piston 64 balances the pressure of the recuperator 53 on the recuperator piston 65. The regulation of amount of fuel injected is effected like in the pump previously described, by varying the oil admission pressure, which modifies the return stroke. During this period, the right hand face of the return piston 64 delivers into the exhaust the oil comprised between this face and the right hand end of the return cylinder.

Injection is started by the sudden opening of the valve 51 brought to the "exhaust" position. Under the action of the pressure of the recuperator 53, the movable set 63—64—65 moves with a rapidly accelerating speed, and assumes such a speed that the pressure opposed by the injector 50 to the passage of the fuel delivered through the orifice of the injector 50 balances the pressure of the recuperator. The movable set is braked at the end of the stroke by the expulsion of the layer of oil comprised between the return piston 64 and the left hand end of the cylinder against which the piston ultimately strikes.

As in the pump previously described, the periods of acceleration and retardation of the movable set are very slight and it is easy to brake this movable set to an extent sufficient to avoid any shock at the end of the injection stroke, even in the case of a failure of suction.

In the pump shown in Figure 3, the bores of the injection cylinder 45 and of the recuperator cylinder 47 are equal, and therefore, the pistons 63 and 65 have the same cross-sections. This condition, which is not indispensable, has the additional advantage that during injection the free volume of the return cylinder 46, situated to the right of the piston 64, is increased by a quantity equal to the diminution of the free volume of the return cylinder 47, situated on the left of the piston 64. During this very short period, the oil will, therefore, merely pass through the bores of the valve 51 and the orifice 52 from the left to the right hand face of the return piston 64. Only a very small quantity of it will pass through the exhaust pipe 55' owing to the very rapid injection and to the inertia of the column of liquid in this pipe. It is, therefore, unnecessary to provide a shock absorber and an air tank at the exhaust which would be otherwise necessary for storing the oil discharged from the return cylinder.

Another result of this arrangement is that the pressures in the recuperator 53 are, as regards the absolute value, equal to the delivery pressures of the fuel which may be assumed to be very much higher than the pressure of the oil admitted into the return cylinder. This variant is more particularly suitable in fact when it is desired to use a moderate oil pressure (100/200 kgs/cm^2) such as those commonly used for feeding presses for driving the pump. The pump shown in Figures 1 and 2 and the pump which will be subsequently described and is shown in Figures 5–7 are better adapted for a higher pressure of oil. The tanks required for storing oil under pressure admitted into the motor cylinder during an injection stroke become in fact very unwieldy in size if the oil pressure is weak in absolute value. But for the type of pump shown in Figure 3, it is necessary to provide a special source of oil of a very high pressure for recharging or refilling the recuperator, that is to say for compensating for any leakages so that the pressure in the recuperator at the end of the injection stroke may be maintained constant.

Such a refilling means is shown in Figure 3. At the point 66 when the bore of the compressor cylinder 45 opens into the return cylinder 46, the pump body has been bored to a diameter slightly larger than the diameter of the compressor cylinder. The piston 67 inserted between the compressor piston 63 and the return piston 64 engages at the end of the injection stroke with this so-called recharging bore 66.

The oil delivered is thus compressed in a chamber constituted by the pipe 68, the volume of which has been calculated in such a manner that the pressure in this chamber should reach at the end of the injection stroke the value chosen as pressure in the recuperator at the end of the injection stroke (that is to say the minimum

pressure in the recuperator). The pipe 68 opens into the groove 69 provided in the bore of the recuperator 47 through an orifice 106 closed by an automatic valve 107 which is raised when the pipe delivers into the recuperator. This groove 69 is uncovered by the piston 65 at the end of the injection stroke. Due to this means, the pressure in the recuperator 53 at the end of the injection stroke is maintained practically constant.

In the variant shown in Figures 5, 6 and 7, the piston 64—65 plays the part of the return piston with its left hand face, and of the recuperator piston with the right hand face. The return cylinder 46 and the recuperator cylinder 47 are combined into a single unit. The control of the admission and exhaust is effected exactly in the same way as in the construction shown in Figure 3.

The result of this arrangement is that the maximum pressure in the recuperator at the end of the injection stroke is lower than the minimum pressure of the oil distribution which feeds the return system (the minimum pressure of the oil distribution being that which corresponds to a zero quantity of oil injected). This minimum pressure must in fact balance the pressure of the recuperator at the end of the return stroke. For this reason, it must be greater than the latter, for the cross-section of the recuperator piston is equal to the cross-section of the return piston plus the cross-section of the compressor piston.

At the end of each injection stroke, the recuperator, is refilled by the oil distribution by means of a pressure reducing device identical with that described for the construction shown in Figure 2. These various apparatus are shown in Figures 6 and 7 with the same reference numbers. In Figures 5, these devices, namely the valve 51 and the pressure controller 37 are in cross-section but the various passages leading from them are not all in communication with one another. On the contrary Figures 6 and 7 show their exact position and their connection to one another.

The working of this arrangement is as follows:—During the injection period, the valve 51 is moved in the direction of the arrow 51' so that the piston 61' closes the bore 61 and the pistons 59 and 60 are disengaged from the bores 59' and 60' respectively. Consequently, the cylinder 46 is connected to the exhaust through the bores 59' and 60' and the chamber 55 which is in communication with a closed chamber (not shown) partly filled with air, that stores during the injection stroke the oil violently discharged from the return cylinder, without any noticeable increase of pressure. At the end of the injection period, the piston 64—65 uncovers the groove 35 which establishes communication through a pipe 36 between the cylinder 47 and the chamber 37 of the pressure controller. During the return period, the valve returns to the position of Figure 6 in which it connects the cylinder 46 to the oil distribution. This stroke ends when the pressure of the distributed oil on the left hand face of the piston 64—65 is balanced by the pressure of the oil in the interior of the recuperator 53.

What I claim is:—

1. In a pump for the injection of liquid fuel into internal combustion engines, a mechanical injection device, an accumulator for storing between two injections compressible hydraulic energy, and means for actuating said mechanical injection device for producing the injection by expending said hydraulic energy.

2. In a pump for the injection of liquid fuel into internal combustion engines, a mechanical injection device, a hydraulic accumulator for storing between two injections compressible energy, and means for actuating said mechanical injection device for producing the injection by expending said energy, said accumulator being fed directly from a source of compressible liquid under constant pressure.

3. In a pump for the injection of liquid fuel into internal combustion engines, a mechanical injection device, an accumulator for storing between two injections compressible energy expendible for producing the injection, means for actuating said mechanical injection device by expending said energy, and means for regulating the return of the mechanical injection device.

4. In a pump for the injection of liquid fuel into internal combustion engines, a mechanical injection device, an accumulator for storing between two injections compressible energy expendible for producing the injection, means for actuating said mechanical injection device by expending said energy, and a compressible liquid recuperator for regulating the return of the mechanical injection device.

5. In a pump for the injection of liquid fuel into internal combustion engines, a mechanical injection device, an accumulator for storing between two injections compressible energy expendable for producing the injection, and means for actuating said mechanical injection device by expending said energy, said accumulator being adapted to serve as a compressible liquid recuperator for regulating the return of the mechanical injection device.

6. In a pump for the injection of liquid fuel into internal combustion engines provided with a mechanical injection, a cylinder, means for connecting this cylinder with the fuel feed piping and with the injection orifice of the engine, a fuel compressing piston in said cylinder, a tank, a compressible liquid in said tank, means for connecting said tank with a source of liquid under pressure during the interval between two successive injections, and means for actuating said compressing piston during the injection stroke by the expansion of the liquid which is compressed in said tank.

7. A pump for the injection of liquid fuel into internal combustion engines provided with a mechanical injection, comprising a cylinder, inlet and outlet means for the fuel, a movable set in said cylinder having two faces, one forming the fuel compressing piston and the other forming the driving piston, a tank having a compressed liquid therein, means for actuating said driving piston, during the injection stroke, by the expansion of the compressed liquid in said tank, and means for returning the movable set to its initial position after the injection.

8. A pump for the injection of liquid fuel into internal combustion engines provided with a mechanical injection, comprising a movable set having a shaft and a fuel compressing piston and a driving piston mounted on said shaft, a tank, a compressible liquid in said tank, means for actuating said driving piston during the injection stroke by the expansion of the compressed liquid in said tank, a third piston mounted on the shaft of said movable set, a source of compressible liquid under constant and adjustable pressure, means for connecting said third piston to said source in the interval between two successive injections for returning the movable set to its ini-

tial position, a plurality of cylinders for said pistons, inlet and outlet means for the fuel, means for drawing said fuel into the space in front of the compressing piston during the return stroke of said piston, and means for limiting said return stroke, said means comprising a spring.

9. A pump for the injection of liquid fuel into internal combustion engines provided with a mechanical injection, comprising a movable set having a shaft and mounted on said shaft a fuel compressing piston and a driving piston, a cylinder, inlet and outlet means for the fuel, a tank, a compressed liquid in said tank, means for actuating said driving piston during the injection stroke by the expansion of the compressed liquid in said tank, a third piston mounted on the shaft of said movable set, a source of compressible liquid under constant and adjustable pressure, means for connecting said third piston to said source in the interval between two successive injections for returning the movable set to its initial position, means for drawing the liquid fuel into the space in front of the compressing piston during the return stroke of said piston, and means for limiting said return stroke, said means comprising a compressible liquid recuperator.

10. A pump for the injection of liquid fuel into internal combustion engines provided with a mechanical injection, comprising a cylinder, inlet and outlet means for the fuel, a movable set in said cylinder having a shaft and mounted on said shaft a fuel compressing piston and a driving piston, a source of compressible liquid under constant and high pressure, a tank, means for connecting said source and said tank in the interval between two successive injections, means for actuating said driving piston during the injection stroke by the expansion of the compressed liquid in said tank, and means for returning the movable set to its initial position after the injection.

11. A pump for the injection of liquid fuel into internal combustion engines provided with a mechanical injection, comprising a cylinder, inlet and outlet means for the fuel, a movable set having a fuel compressing piston and a driving piston, a tank, a compressed liquid in said tank, means for actuating said driving piston during the injection stroke by the expansion of the compressed liquid in said tank, means for returning said movable set to its initial position after the injection, a compressible liquid recuperator for limiting said return stroke, and means for retaining said recuperator under constant pressure at the end of each injection stroke.

12. A pump for the injection of liquid fuel into internal combustion engines provided with a mechanical injection, comprising a cylinder, inlet and outlet means for said fuel, a movable set having a fuel compressing piston and a driving piston, a tank, a compressed liquid in said tank, means for actuating said driving piston during the injection stroke by the expansion of the compressed liquid in said tank, means for returning said movable set to its initial position after the injection, a compressible liquid recuperator for limiting said return stroke, a source of liquid under constant pressure, a chamber filled with liquid between said source and said chamber for regulating the pressure in the latter, an automatic valve comprising a piston provided with a spring, said piston being exposed to the pressure of said chamber and to the antagonistic action of said spring, and means for automatically connecting at the end of each injection stroke said compressible liquid recuperator to said constant pressure chamber.

13. A pump for the injection of liquid fuel into internal combustion engines provided with a mechanical injection, comprising a cylinder, inlet and outlet means for said fuel, a movable set having a shaft and a fuel compressing piston, a driving piston and returning piston mounted on said shaft, a source of liquid under constant pressure, means for actuating by the liquid of said source said returning piston in the interval between two successive injection strokes and for suppressing this action during the injection stroke, a compressible liquid recuperator, means for compressing by said driving piston the liquid in said recuperator during the return stroke of said movable set, means for actuating during the injection stroke said driving piston by the expansion of the liquid in said recuperator, and means for returning to a constant value the pressure of said recuperator at the end of each injection stroke.

14. A pump for the injection of liquid fuel into internal combustion engines provided with a mechanical injection, comprising a cylinder, inlet and outlet means for said fuel, a movable set having a shaft and a fuel compressing piston, a driving piston and a returning piston mounted on said shaft, a source of liquid under constant pressure, means for actuating said returning piston in the interval between two successive strokes by the liquid of said source, a compressible liquid recuperator, means for compressing by said driving piston the liquid in said recuperator during the return stroke of said movable set, means for actuating during the injection stroke said driving piston by the expansion of the liquid in said recuperator, a re-charging tank adapted to communicate with the portion of the cylinder for the returning piston of the movable set, a piston arranged on the shaft of said movable set for compressing at the end of each injection stroke the liquid in said re-charging tank, and means for automatically connecting said recuperator to said re-charging tank at the end of the injection stroke, said means comprising an orifice provided with a valve and adapted to be uncovered by the driving piston at the end of the injection stroke.

15. A pump for the injection of liquid fuel into internal combustion engines provided with a mechanical injection, comprising a cylinder, an inlet and outlet means for the fuel, a movable set having a shaft, a fuel compressing piston, a driving piston and a returning piston mounted on said shaft, a source of liquid under constant pressure, means for actuating by the liquid of said source said returning piston in the interval between two successive injection strokes, a compressible liquid recuperator, means for compressing by said driving piston the liquid in said recuperator during the return stroke of said movable set, means for actuating during the injection stroke said driving piston by the expansion of the liquid in said recuperator, a chamber filled with liquid, an automatic valve between the source of liquid under constant pressure and said chamber for regulating the pressure in the latter, said valve comprising a piston provided with a spring, said piston being exposed to the pressure of said chamber and to the antagonistic action of said spring, and means for automatically connecting at the end of each injection stroke said compressible liquid recuperator to said constant pressure chamber.

16. A pump for the injection of liquid fuel into internal combustion engines provided with a mechanical injection, comprising two co-axial

cylinders, a movable set having a shaft, a fuel compressing piston and a driving piston mounted on said shaft and movable in said cylinders, a fuel feed piping, an injection orifice for the injection, means for connecting one of said cylinders with the fuel feed piping and with the injection orifice, a source of liquid under constant and high pressure, a tank, means for connecting said source of liquid with said tank between two successive injections, means for connecting said tank with the other of said cylinders during the injection stroke, means for cutting off this connection at the end of the injection stroke and allowing the liquid contained in said cylinder to escape, a third cylinder co-axial with said cylinders, a third piston in said third cylinder for returning the movable set to its initial position, said third piston of smaller diameter than the driving piston and attached to the shaft of the movable set, means for connecting permanently one face of said third piston acting as return piston with the tank of compressible liquid under high pressure, and means for limiting the return stroke of the movable set.

17. A pump for the injection of liquid fuel into internal combustion engines provided with a mechanical injection, comprising two co-axial cylinders, a movable set having a shaft and two pistons mounted on said shaft and moving respectively in each of these cylinders, one of these pistons forming a fuel compressing piston, and the other forming the driving piston by one of its faces and returning piston by its other face, means for connecting the compressor cylinder with the fuel feed piping and with the injection orifice of the engine, a source of liquid under constant pressure, means for connecting the returning piston with said source of liquid during the interval between two injections, means for cutting off this connection and for allowing the liquid contained in the return cylinder to escape during the injection stroke, a compressible liquid recuperator, means for compressing by said driving piston the liquid in said recuperator during the return stroke of said movable set, means for actuating during the injection stroke said driving piston by the expansion of the liquid in said recuperator, a recharging tank adapted to communicate with the return cylinder for the movable set, a piston arranged on the shaft of said movable set for compressing at the end of each injection stroke the liquid in said re-charging tank, and means for automatically connecting said recuperator to said re-charging tank at the end of the injection stroke, said means comprising an orifice provided with a valve and adapted to be uncovered by the driving piston at the end of the injection stroke.

18. A pump for the injection of liquid fuel into internal combustion engines provided with a mechanical injection, comprising a cylinder, means for connecting this cylinder with the fuel feed piping and with the injection orifice of the engine, a movable set in said cylinder which comprises a shaft and a fuel compressing piston, a driving piston and a returning piston mounted on said shaft, a source of liquid under constant pressure, means for actuating said returning piston in the interval between two successive injection strokes by the liquid of said source, a compressible liquid recuperator, means for compressing by said driving piston the liquid in said recuperator during the return stroke of said movable set, means for actuating during the injection stroke said driving piston by the expansion of the liquid in said recuperator, a chamber filled with liquid, an automatic valve between said liquid source and said chamber for regulating the pressure in the latter, said valve comprising a piston provided with a spring, said piston being exposed to the pressure of said chamber and to the antagonistic action of said spring, and means for automatically connecting at the end of each injection stroke said compressible liquid recuperator to said constant pressure chamber.

GEORGES JEAN PIERRE JULES JOSEPH BRUN.