(No Model.)

W. McCORMACK & C. E. CRAIG

WIRE FENCE MAKING IMPLEMENT.

No. 456,093. Patented July 14, 1891.

Fig. 1.

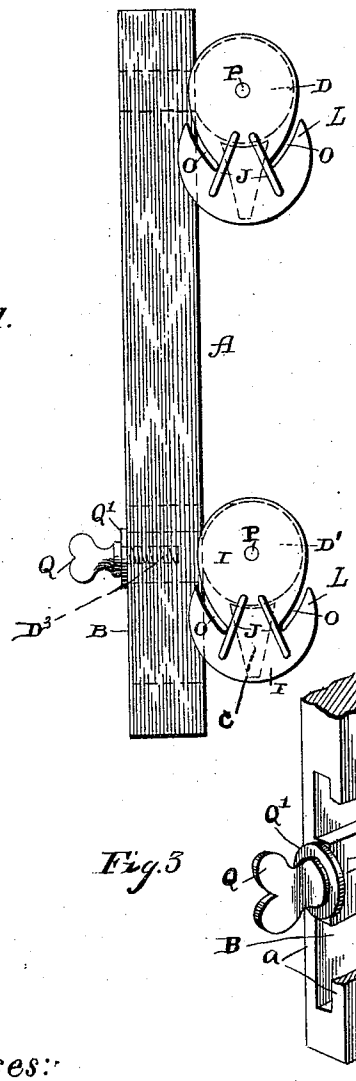

Fig. 2.

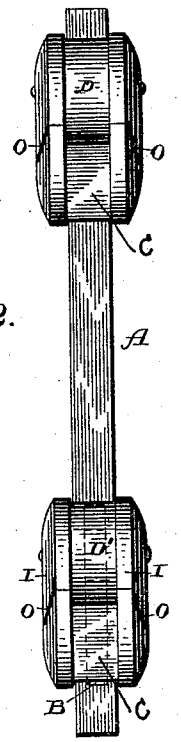

Fig. 3

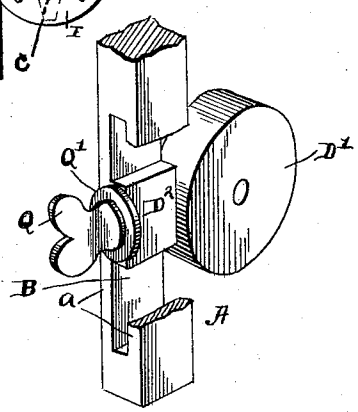

Witnesses:
E. P. Ellis.
B. Brockett

Inventors:
Wm. McCormack.
Cassius E. Craig.
per Lehmann & Pattison,
Attys

THE NORRIS PETERS CO., PHOTO-LITHO., WASHINGTON, D. C.

UNITED STATES PATENT OFFICE.

WILLIAM McCORMACK AND CASSIUS E. CRAIG, OF OTWELL, INDIANA.

WIRE-FENCE-MAKING IMPLEMENT.

SPECIFICATION forming part of Letters Patent No. 456,093, dated July 14, 1891.

Application filed September 1, 1890. Serial No. 363,688. (No model.)

To all whom it may concern:

Be it known that we, WILLIAM MCCORMACK and CASSIUS E. CRAIG, of Otwell, in the county of Pike and State of Indiana, have invented certain new and useful Improvements in Wire-Fence-Making Implements; and we do hereby declare the following to be a full, clear, and exact description of the invention, such as will enable others skilled in the art to which it pertains to make and use it, reference being had to the accompanying drawings, which form part of this specification.

Our invention relates to an improvement in wire-fence-making implements; and it consists in certain novel features of construction, which will be fully described hereinafter, and more particularly referred to in the claims.

The object of our invention is to make the tumblers adjustable in relation to each other, so that they can be adjusted to weave wires for fences of different heights.

Referring to the accompanying drawings, Figure 1 is a side elevation of our improved implement. Fig. 2 is an edge view of the same. Fig. 3 is a perspective view of the adjustable supporting-block in position on the bar, the latter being partially broken away.

A represents a bar or staff of any suitable length, which is provided with a slot or transverse opening B in one of its ends.

D represents a supporting block or disk, which is provided with a tenon or extension D^2 on its edge, which fits the opening B, and which can be vertically adjusted therein. The support is held in the desired adjustment by a screw Q, which fits a correspondingly screw-threaded opening D^3 in the extension D^2. This screw enters the said opening from the opposite edge of the bar A from the tumbler and is provided with a shoulder or collar Q', which bears against the narrow edges *a* of the slot B, and thus holds the support firmly in position. The opposite end of the bar A is provided with a similar support D; but the latter is not capable of any adjustment. These disks or supports D and D' are each of substantially the same thickness as the bar A.

Pivotally secured to the supports D D' are the tumblers, which are formed of two side pieces I, secured together at their outer ends by a wedge-shaped block or piece C. The supports occupy the space between the inner ends of the side members of the tumblers, which freely turn on the pivot P. Extending inward from the sides of the tumblers are the curved slots O, in which the fence-wires are placed for twisting. The inner ends of these slots are provided with weaving strips or wires J, which prevent the fence-wires from cutting any deeper the said slots. The edges of the side members I extend slightly over the side of the bar A, as shown in Fig. 1, which prevents the tumblers from having any side or wabbling movement they might otherwise have. The two wires of each strand are placed in the slots O, and then these wires are woven around the pickets by raising and lowering the staff, so that the turning of the tumblers upon their pivots through a half-circle will cross or weave the wires. By means of the ears or projections L on the tumblers the crossing wires are held in place and prevented from becoming detached.

Having thus described our invention, we claim—

1. In a fence-weaving implement, a bar provided with a transverse slot, a disk of substantially the same thickness as the bar, a tumbler pivoted to the said disk, the latter being provided with a tenon which extends into the transverse slot, the outer end of the tenon being provided with a screw-threaded socket, a screw which enters the said socket from the opposite edge of the bar, and a shoulder upon said screw, whereby the supporting-disk is held in the desired adjustment, the parts being combined to operate substantially as shown and described.

2. In a fence-weaving implement, the bar, supports secured thereto, tumblers, each consisting of two slotted side plates connected by the piece C, which tumblers are pivoted to the said supports, the sides of the tumblers being adapted to extend over the sides of the bar, for the purpose shown and described.

In testimony whereof we affix our signatures in presence of two witnesses.

WILLIAM MCCORMACK.
CASSIUS E. CRAIG.

Witnesses:
WILLIAM LENT,
THOMAS B. HUDSON.