A. D. STRATTON.

COMBINATION PLASTERER'S IMPLEMENT.

APPLICATION FILED OCT. 9, 1914.

1,154,453. Patented Sept. 21, 1915.

Fig. 1.

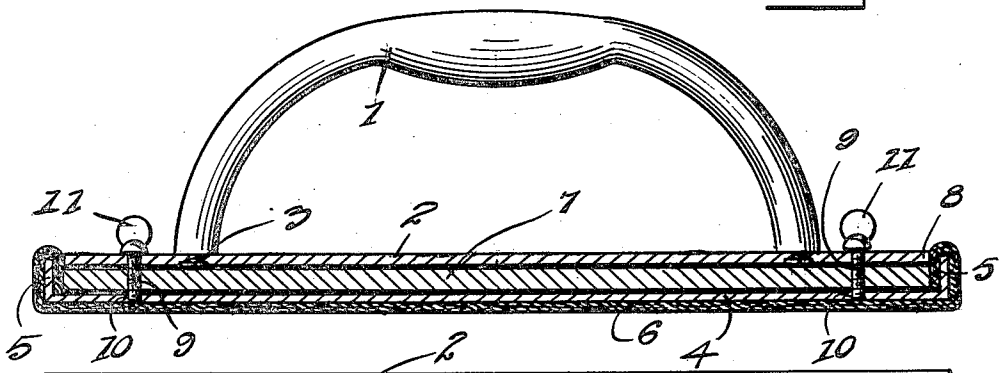

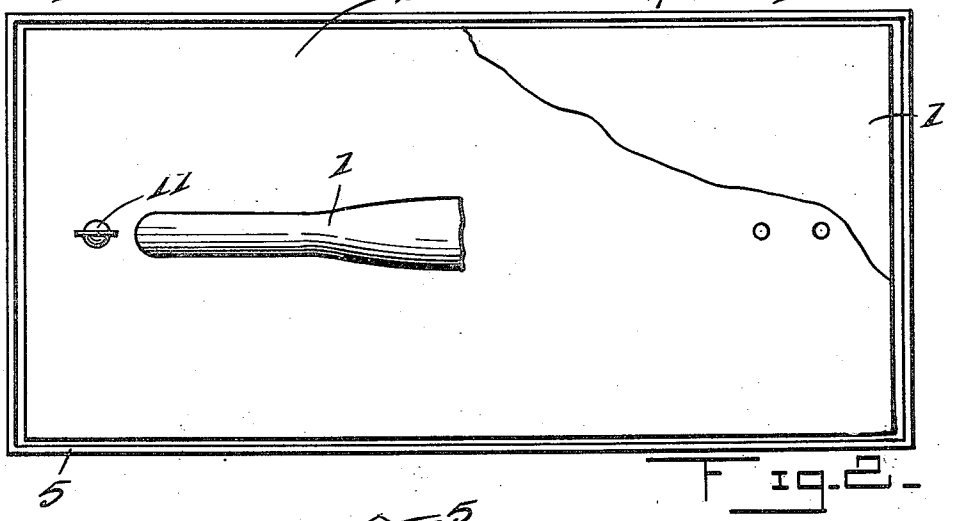

Fig. 2.

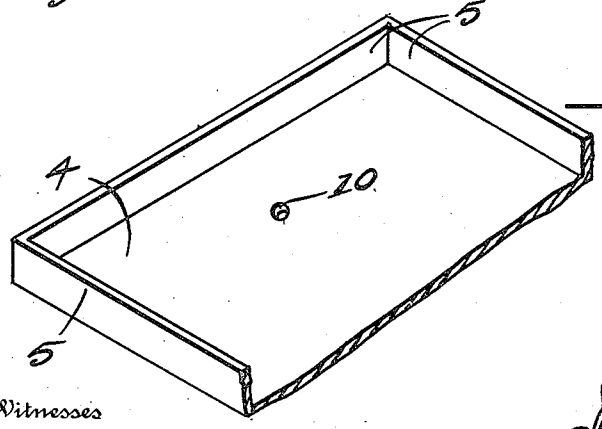

Fig. 3.

Witnesses

C. R. Bealle.

Wm. S. Fowler.

Inventor

A. D. Stratton.

By A. H. Randolph, Jr.

Attorney

UNITED STATES PATENT OFFICE.

AZARIAH D. STRATTON, OF OMAHA, NEBRASKA.

COMBINATION PLASTERER'S IMPLEMENT.

1,154,453. Specification of Letters Patent. Patented Sept. 21, 1915.

Application filed October 9, 1914. Serial No. 865,925.

To all whom it may concern:

Be it known that I, AZARIAH D. STRATTON, a citizen of the United States, residing at Omaha, in the county of Douglas and State of Nebraska, have invented certain new and useful Improvements in Combination Plasterers' Implements; and I do hereby declare the following to be a full, clear, and exact description of the invention, such as will enable others skilled in the art to which it appertains to make and use the same.

This invention comprehends certain new and useful improvements in plasterers' tools and has for its primary object to provide a tool or implement of this character which will be of simple construction and operation and which may be readily assembled for use.

The invention has for another object to provide an instrument of this character which may be assembled in several ways and which will be of such form that either one of several floats may be employed or the tools may be used without the float and shoe employed for holding the smoothing member formed of similar material.

The invention has for a further object to provide a tool or instrument of this character which will be composed of the minimum number of parts and however cheap as well as durable construction and which may be used as either a trowel or a smoothing member as the case may require.

With the above and other objects in view as will become more apparent as the description proceeds, the invention consists in certain novel features of construction, combination and arrangement of parts as will be hereinafter more fully described and claimed.

For a complete understanding of my invention, reference is to be had to the following description and accompanying drawings, in which—

Figure 1 is a vertical longitudinal section through the complete device. Fig. 2 is a top plan view with parts broken away for the same of clearness, and Fig. 3 is a fragmentary view of the shoe.

Referring more particularly to the drawing in which similar reference characters designate corresponding parts throughout the several views, 1 designates the handle which is preferably of a substantially semi-circular form and which has its apertured ends secured upon the upper face of the trowel plate 2, by screws 3 or other suitable members secured through the plate 2 and into the ends of the handle 1, the edge of the securing members being circular countersunk in the plate 2 to provide a smooth outer face for the same. Trowel plate 2 may be readily employed in the usual manner as a plasterer's trowel. When it is desired to provide a smoothing tool or instrument, however, the shoe 4 is employed, said shoe 4 being pressed in the form of a plate having its opposite side and end edges directed upwardly, as shown at 5 by a smoothing member 6 formed of a section of carpet or other similar material may be placed over the bottom of the shoe 4 with its edges extended around and over the sides or edges 5 of the shoe 4 and directly downwardly in said shoe, as clearly shown in Fig. 1. The float 7 is then placed in the shoe 4 and forced down into the same to bind the edges of the smoothing members 6 against the inner faces of the upturned sides or edges 5 of the shoe 4, as clearly shown at 8, in Fig. 1 and the securing and clamping screws 9 are then extended downwardly through suitable openings provided for the same in the plate 2 and float 7 and threaded into suitable openings in the bottom of the shoe 4, as shown at 10, the heads 11 of the securing and clamping screws 9 are screwed downwardly upon the upper face of the plate 2 whereby all of the parts may be readily and securely held in proper position.

It will be understood that while the plate 2 and shoe 4 are preferably formed of metal, the float 7 is preferably formed of wood or cork or some other suitable and like material which will have a certain amount of resiliency and at the same time cheap to manufacture. It will also be understood that the handle 1 may be formed of any suitable material and may be desired shape as desired and secured to the plate 2 in any suitable and well known manner.

From the foregoing it will be readily seen that I have provided an improved and novel combination tool especially adapted for use by plasterers and other workmen who require trowels and smoothing tools in their daily occupation and the tool or implement may be readily and quickly converted into either a trowel or a smoothing implement as desired.

While the preferred embodiment of the

invention has been shown and illustrated, it will be understood that minor changes in the details of construction and arrangement of parts may be made within the scope of the appended claims without departing from the spirit of the invention or sacrificing any of the advantages thereof.

What is claimed is:—

1. In a trowel, a plate, a handle secured to said plate intermediate its sides and ends, said plate having apertures adjacent the handle, a shoe having its sides and edges turned upwardly, a cover arranged under the shoe and having its edges engaged over the upturned edges of the shoe, a float to fit within said shoe, and its outer edges to engage the covering carried by said shoe, said float having apertures therein to correspond with the apertures in said plate, means placed through said apertures for holding said parts in an assembled position.

2. In a trowel, a plate substantially rectangular, said plate having a channel formed thereon, and having apertures therein, a shoe having its ends and sides turned upwardly, a cover arranged over said shoe and its ends to be bent over the upturned edges of the shoe, a float adapted to seat within the shoe and tightly wedge said covering against the upturned edges of the shoe, said float provided with apertures to correspond with the apertures in the plate, and means placed through said apertures for holding said plate and float and shoe in an assembled position.

In testimony whereof I affix my signature in presence of two witnesses.

AZARIAH D. STRATTON.

Witnesses:
FRANK L. WEAVER,
P. H. SMALLEY.