(12) PATENT
(19) AUSTRALIAN PATENT OFFICE

(11) Application No. **AU 199869917 B2**
(10) Patent No. **744835**

(54) Title
Chewy sugar confectionery product

(51)[7] International Patent Classification(s)
A23L 001/09 **A23G 003/00**

(21) Application No: **199869917** (22) Application Date: **1998.06.04**

(30) Priority Data

(31) Number	(32) Date	(33) Country
97304005	**1997.06.10**	**EP**

(43) Publication Date : **1998.12.17**
(43) Publication Journal Date : **1998.12.17**
(44) Accepted Journal Date : **2002.03.07**

(71) Applicant(s)
Societe Des Produits Nestle S.A.

(72) Inventor(s)
Ulrich Bangerter; Jamie Edward Geddes

(74) Agent/Attorney
BALDWIN SHELSTON WATERS,Level 21,60 Margaret Street,SYDNEY NSW 2000

(56) Related Art
US 3908032
US 4468409
US 4744999

ABSTRACT

The invention relates to method of making a crystalline pumpable confection mass for a chewy confection product. The method comprising the steps of a) providing an liquid medium comprising sugar, b) concentrating the liquid medium, c) cooling the liquid medium below its saturation point and kneading it to induce formation of crystallisation therein, d) re-heating the medium to a temperature effective to make the medium a pumpable confection mass while crystal structure is retained in it.

AUSTRALIA

PATENTS ACT 1990

COMPLETE SPECIFICATION

FOR A STANDARD PATENT

ORIGINAL

Name of Applicant/s: Societe Des Produits Nestle S.A.

Actual Inventor/s: Ulrich BANGERTER and Jamie Edward GEDDES

Address of Service: BALDWIN SHELSTON WATERS
60 MARGARET STREET
SYDNEY NSW 2000

Invention Title: "CHEWY SUGAR CONFECTIONERY PRODUCT"

The following statement is a full description of this invention, including the best method of performing it known to us:-

(File: 20765.00)

CHEWY SUGAR CONFECTIONERY PRODUCT

The present invention relates to a chewy confection product, in particular a chewy confectionery product which is made by injection moulding or depositing. The invention also relates to a method for making a pumpable crystalline confection mass from which such chewy confection products can be made by depositing or injection mould.

The texture of sugar confection varies with its crystallisation. A sugar confection's crystallisation depends on its nucleation, which is the formation of solute crystals prior to growth, and the growth, which is the process by which solute molecules build onto existing crystals and increase their size. The growth rate relies upon transfer of the solute from the bulk solution to the growing surface. Nucleation and growth rates may be controlled by selecting temperature, process and recipe conditions.

Chewy products are well known in the sugar confection industry. A chew has a certain resistance to mastication both from flow past the teeth (toughness) and dissolution i.e. the length of the chew. The length of the chew before full dissolution is normally a couple of minutes. It will be appreciated that this kind of product is different from chewing-gums, which are a gum based confection which is not intended to be dissolved upon chewing.

Traditionally, chewy sugar confectionery or candy is manufactured by heating, beating and whipping a sugar mass consisting of sugar, fats and water until it has the right consistency and forming it into a rope. The rope is then cut into pieces of a size suitable for consumption. The cutting is for example done by knives or by using a rotary die. Prior to the cutting the chewy product is left for relaxation in order to allow molecular movements to take place. In order to advance the nucleation, crystalline powder may be added to a sugar confection during the manufacturing.

Due to the nature of conventional manufacturing methods, the shaping of chewy products is limited to cutting and rotary die forming. Furthermore, the conventional methods require a relaxation step before cutting, packing and wrapping of the candies. Problems with cold flow are experienced for this type of manufacturing method.

It is an object of the present invention to overcome or ameliorate at least one of the disadvantages of the prior art, or to provide a useful alternative.

According to the invention it has surprisingly been found that it is possible to deposit or injection mould a chewy crystalline sugar confection while maintaining the chewy properties in the end product. A chewy product may be produced by a crystalline mass that is pumpable and thus makes it possible to use alternative shaping methods.

In a first aspect, the invention relates to a method for making a crystalline pumpable confection mass for a chewy confection product, comprising:

a) providing a liquid medium comprising sugar,

b) heating the liquid medium to obtain a concentrated liquid medium, and

c) cooling the concentrated liquid medium to a temperature below its saturation point and kneading it to induce formation of crystallisation therein, wherein:

in step (c) the concentrated liquid medium is passed in at least one kneading and cooling zone of an extruder and then passed in at least one recovery and cooling zone of the extruder such that the concentrated medium is cooled to a temperature below its sugar saturation point and the sugar crystal nucleation is induced and the method further comprises:

d) re-heating the cooled medium in the extruder to a temperature effective to make the medium a pumpable confection mass while crystal structure is retained.

The invention also relates to a chewy confection product made from a solidified, pumpable, crystalline mass of this type.

AUSTRALIAN PATENT OFFICE

Furthermore, it has been found that with the pumpable state of the crystalline confection mass the relaxation step may not be necessary.

In another aspect, the present invention provides a chewy confection product made from a solidifiable pumpable crystalline confection mass as described above.

This gives smoother texture and desirable mouthfeel of the product.

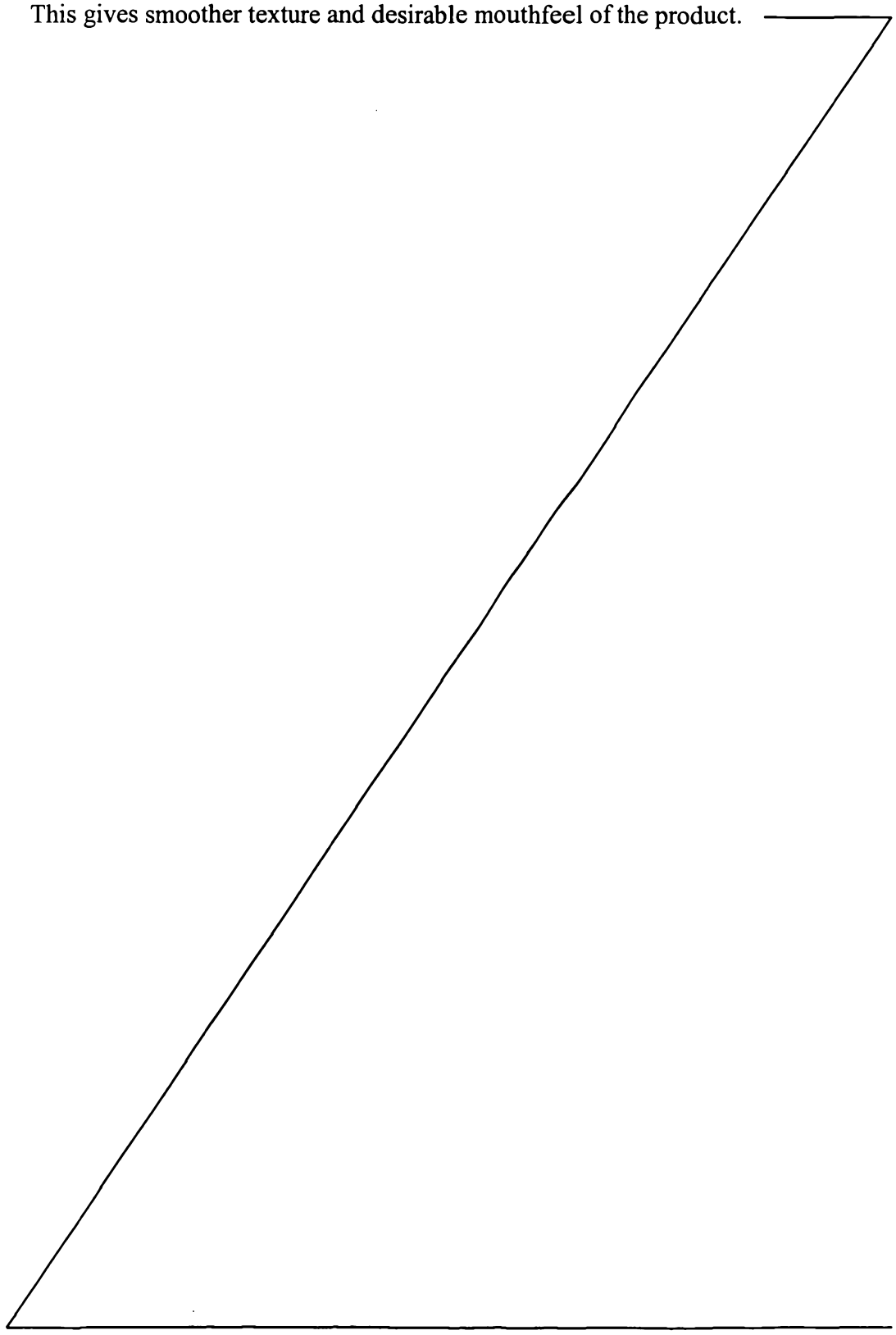

AUSTRALIAN PATENT OFFICE

In the present context sugar means a component selected from the group consisting of sucrose, fructose, glucose, dextrose, lactose etc. or sugar alcohol such as sorbitol, xylitol etc. or a combination thereof.

A chew has, as discussed above, a certain resistance to mastication both from flow past the teeth (toughness) and dissolution i.e. the length of the chew. The length of the chew before full dissolution is normally a couple of minutes. Without wanting to be bound by theory, it is believed that the chewyness is a result of the molecular structure of hydrocolloid and longer oligosaccharides from syrup of sugar such as glucose which have the effect at low moisture content of creating high viscosity and hence the resistance to mastication.

The process steps of homogenising, concentrating, cooling, kneading and recovering discussed in the present text are well known to a person skilled in the art of sugar confection. The homogenising may e.g. be performed in a conventional mixer and the concentrating done by means of a plate evaporator or other cooking device.

In a preferred embodiment of the invention, the steps of cooling, kneading and recovering are performed by means of an extruder comprising kneading zones and recovery zones. Advantageously, a twin-screw extruder is used.

Conveniently, the sugar medium is kneaded and cooled in at least one kneading zone and recovered and cooled in at least one recovery zone. Preferably, the medium is heated in the last recovery zone and/or kneading zone of the extruder.

In an especially preferred embodiment of the invention, the sugar medium is heated so that substantially all the crystal nucleation generated in the cooling, kneading and recovery step is retained. According to the invention it has surprisingly been found that this can be done to such an extent that the mass or medium is pumpable. If the mass has a temperature below 70°C it may not be pumpable. Above 100°C the mass is likely to boil which is undesirable for the processing thereof. Therefore, it is preferred that the mass is heated to a temperature in the range 70 to 100°C. Advantageously, the mass is heated to from 85 to 95°C, preferably to a temperature of about 90°C.

In a second aspect, the invention relates to a chewy confection product made from a solidified, pumpable crystalline confection mass according to the above-described method. It has been found that this kind of product may be shaped by depositing or injection moulding. These shaping methods have the advantage that there are almost no limitations to the 3 dimensional shapes obtainable.

Furthermore, the invention relates to a chewy confection product comprising 90 to 95% sugar solids, 2 to 5% fat, 3 to 12% water, which confectionery product has a chewy crystalline structure having a crystal size of below 15μm. This chewy product may also beneficially be shaped by the above-discussed depositing or injection moulding.

In an additional embodiment of the invention, the chewy confection product is centre filled with a filling of lower viscosity than that of the chewy mass.

Unless the context clearly requires otherwise, throughout the description and the claims, the words 'comprise', 'comprising', and the like are to be construed in an inclusive sense as opposed to an exclusive or exhaustive sense; that is to say, in the sense of "including, but not limited to".

The invention will now be explained in further detail by examples only with reference to the accompanying drawings and examples, in which

Fig. 1 is a schematic drawing illustrating a configuration of an extruder used for carrying out a method according to the invention,

Fig. 2 is a schematic drawing illustrating the manufacturing line for the making of the pumpable crystalline mass according to the invention,

Fig. 3 and Fig. 4 are photos of the structure of chewy confection products according to the invention, and

Fig. 5 and Fig. 6 are photos of chewy confection products made by conventional methods.

EXAMPLE 1 – Base Mass

Several chewy confection base masses are prepared by mixing:

AUSTRALIAN PATENT OFFICE

1) crystalline sucrose
2) water
3) glucose syrup

In addition, fat is added to prevent stickiness, lecithin is added as emulsifier, and sorbitol.

For the preparation, a line as shown in Fig. 2 is used. The crystalline sucrose and sorbitol are dissolved in the water in a dissolution tank 1. The dissolution is aided by heating and stirring. Once dissolved, the fat is melted and added. Lecithin is added to stabilise the mixture. An emulsion is formed by subjecting the ingredients to high-shear mixing by the mixer 2. After the emulsification Glucose syrup is added.

The emulsion is pumped via a weighed holding tank 3 through a conventional evaporator 4 and the mass is heated to 140 to 150°C until the moisture content is 4 to 7%.

Hydrated gelatine solution from a gelatine reservoir 5 is added to the mixture before it is introduced in a flash vessel 6. In the flash vessel 6 a separation of steam and cooked mass by lowering of the surrounding pressure is performed. Alternative hydrocolloids or polysaccharides or other texture modifying ingredients may be used to replace the gelatine.

EXAMPLE 2 - Base Mass

A preferred chewy confection product is prepared by mixing: (amounts given in % by weight)

1) 30 to 70% crystalline sucrose
2) 15 to 40% water
3) up to 20% sorbitol
4) up to 10% fat
5) up to 0.1 % lecithin
6) up to 50 % glucose syrup e.g., 42DE acid/enzyme

An example of a preferred confection product:
(given in dry matter, weight %)
63% Sugar
30% Glucose syrup solids
2% Sorbitol
3% Fat
The remaining part constituted by Gelatine, colours and flavours. The final moisture content of the product is about 7%.

EXAMPLE 3 - Extrusion

In order to prepare a pumpable crystalline mass, the confectionery base mass is cooked, as previously described, before being fed into a co-rotating twin screw extruder 7 adapted in accordance with the invention, see Fig. 1.

The mass is forwarded in the extruder 7 through 1) a plurality of kneading and recovery zones 8a, 8b, and 8c, at a temperature of 20°C or less, followed by 2) a compression zone 9 wherein the mass is first heated to a temperature in the range of 40 to 50°C, 9a, and then to a temperature in the range of 70 to 110°C, 9b, before it leaves the extruder. More details on the extruder is given on Fig. 1.

The mass is controlled and identified as pumpable.

EXAMPLE 4 - Shaping

A pumpable crystalline mass is deposited into moulds and passed through a cooling tunnel for solidification. However, this is not a requirement. The products are demoulded and their texture examined. The demoulding does not distort their shape.

A pumpable crystalline mass is injection moulded and solidified. The control of the final product is the same as for deposited.

EXAMPLE 5 - Colouring & Flavouring

For colouring and flavouring, colouring and flavouring agents, e.g. fruit concentrates, or juice, or pulp, are added to the pumpable confection mass exiting the extruder. The mass is then passed through a conventional static mixer and split up into two or more streams

before injection or depositing takes place, see reference 10 at Fig. 2. The texture of the final product is controlled as described above.

Alternatively, the colouring and flavouring agents may be added to the confection mass during the extrusion process.

EXAMPLE 6 - Crystal Size

Fig. 3 and Fig. 4 are photos of the structure of chewy confection products according to the invention while Fig. 5 and Fig. 6 are photos of chewy confection products made by conventional methods. In the images, light areas represent crystal free regions, and dark areas represent crystals.

As can be seen from the photos, the crystal size of the chews in Fig. 3 and 4 is not bigger than 20. While bitter crystals are present in both of the conventionally manufactured chews. The smaller crystals give a desirable, smoother texture and mouthfeel of the product. An estimated average crystal size in Fig. 3 and 4 is less than 15 μm.

The crystallinity of the chews shown in Fig. 3 and Fig. 4 are from 40 to 50%, while the crystallinity of the conventional chew shown in Fig. 5 is from 35 to 40% and in Fig. 6 is from 20 to 30%.

THE CLAIMS DEFINING THE INVENTION ARE AS FOLLOWS:-

1. A method for making a crystalline pumpable confection mass for a chewy confection product, comprising:

a) providing a liquid medium comprising sugar,

b) heating the liquid medium to obtain a concentrated liquid medium, and

c) cooling the concentrated liquid medium to a temperature below its saturation point and kneading it to induce formation of crystallisation therein, wherein:

in step (c) the concentrated liquid medium is passed in at least one kneading and cooling zone of an extruder and then passed in at least one recovery and cooling zone of the extruder such that the concentrated medium is cooled to a temperature below its sugar saturation point and the sugar crystal nucleation is induced and the method further comprises:

d) re-heating the cooled medium in the extruder to a temperature effective to make the medium a pumpable confection mass while crystal structure is retained.

2. A method according to claim 1, wherein the medium is re-heated in the last recovery zone and/or kneading zone of the extruder.

3. A method according to claim 1 or claim 2, wherein the pumpable confection mass comprises substantially all crystal nucleation generated in the cooling, kneading and recovery step.

4. A method according to any one of claims 1 to 3, wherein the liquid medium comprises lipid.

5. A method according to any one of claims 1 to 4, wherein the temperature of the pumpable medium is in the range of 70 to 100°C.

6. A chewy confection product made from a solidified, pumpable crystalline confection mass according to any one of the preceding claims.

7. A chewy confection product according to claim 6, made by depositing.

8. A chewy confection product according to claim 6, made by injection moulding.

9. A chewy confection product according to claim 6 comprising at least 80% sugar solids, which chewy confectionery product has a crystalline structure having crystal size not greater than 20 μm.

10. A chewy confection product according to claim 9, comprising 90 to 95% sugar solids, 2 to 5% fat and 3 to 12% water.

AUSTRALIAN PATENT OFFICE

11. A method for making a crystalline pumpable confection mass substantially as herein described with reference to any one of the embodiments of the invention illustrated in the accompanying drawings and/or examples.

12. A chewy confection product substantially as herein described with reference to any one of the embodiments of the invention illustrated in the accompanying drawings and/or examples.

DATED this 20th Day of December 2001

SOCIETE DES PRODUITS NESTLE S.A.

Attorney: PAUL G. HARRISON
Fellow Institute of Patent and Trade Mark Attorneys of Australia
of BALDWIN SHELSTON WATERS

AUSTRALIAN PATENT OFFICE

FIG. 1

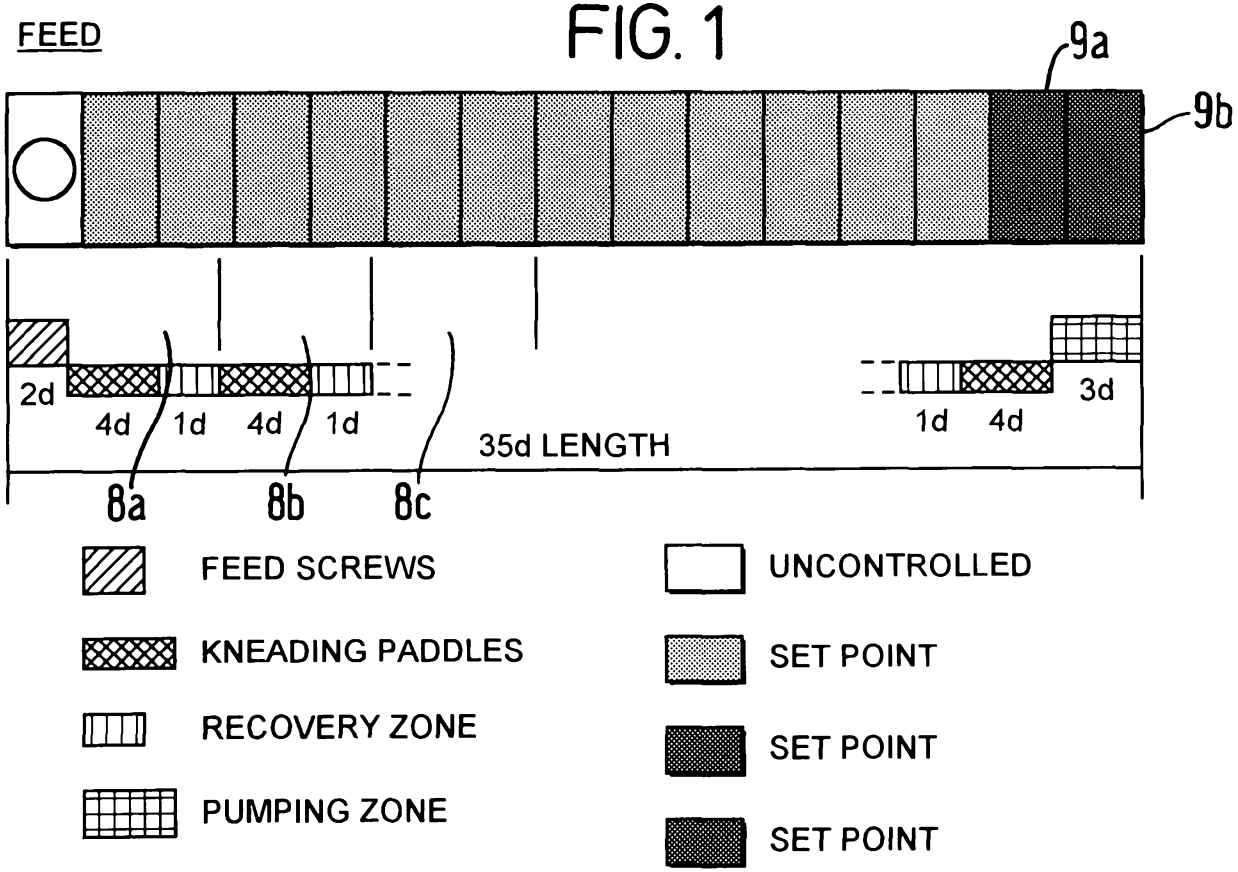
FEED
9a
9b
2d
4d
1d
4d
1d
35d LENGTH
1d
4d
3d
8a
8b
8c
FEED SCREWS
KNEADING PADDLES
RECOVERY ZONE
PUMPING ZONE
UNCONTROLLED
SET POINT
SET POINT
SET POINT

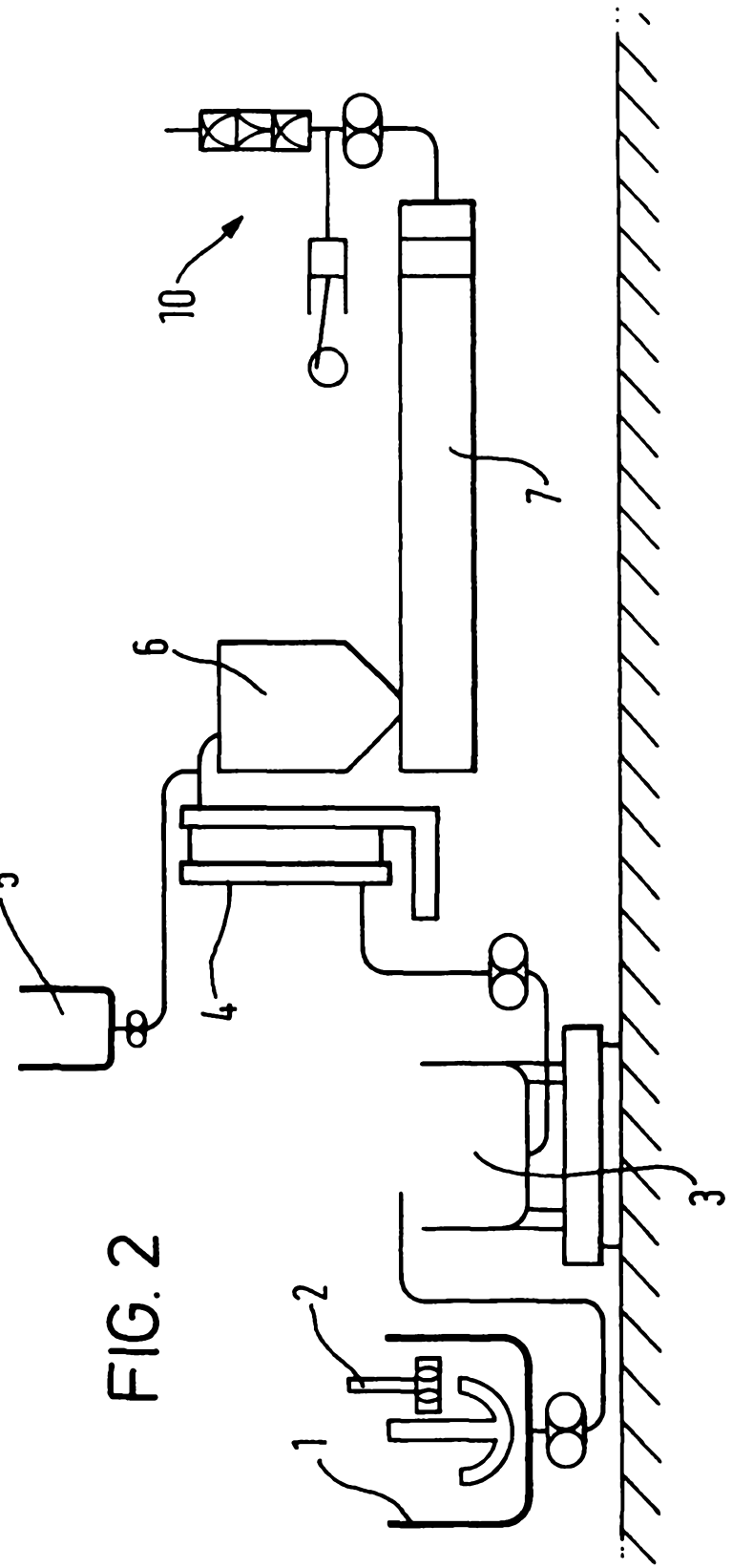

FIG. 2

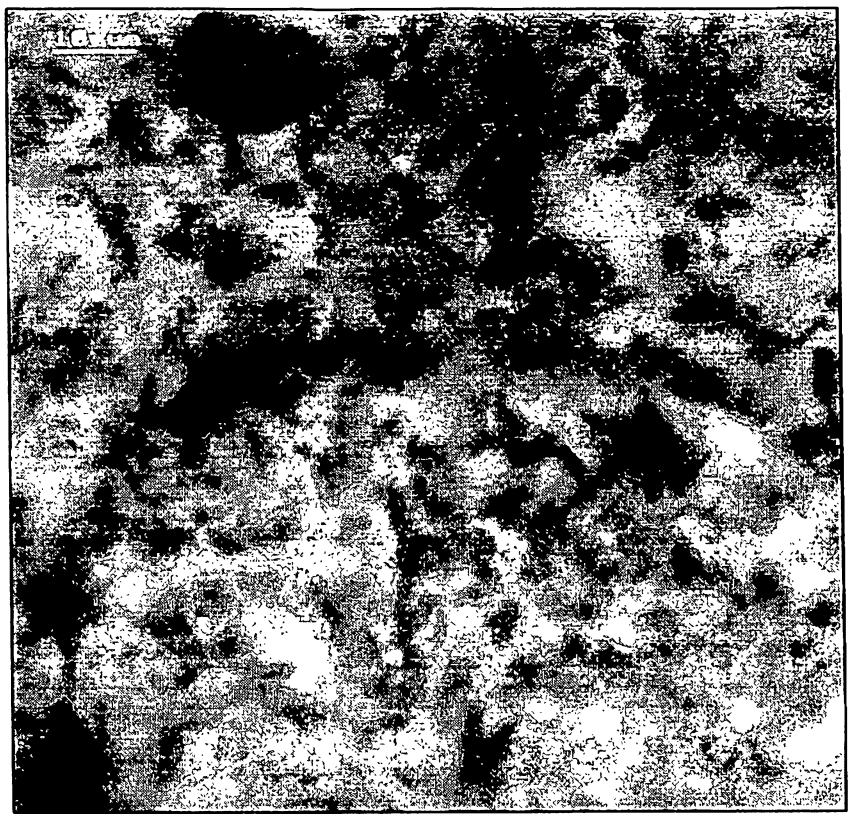

FIG. 3

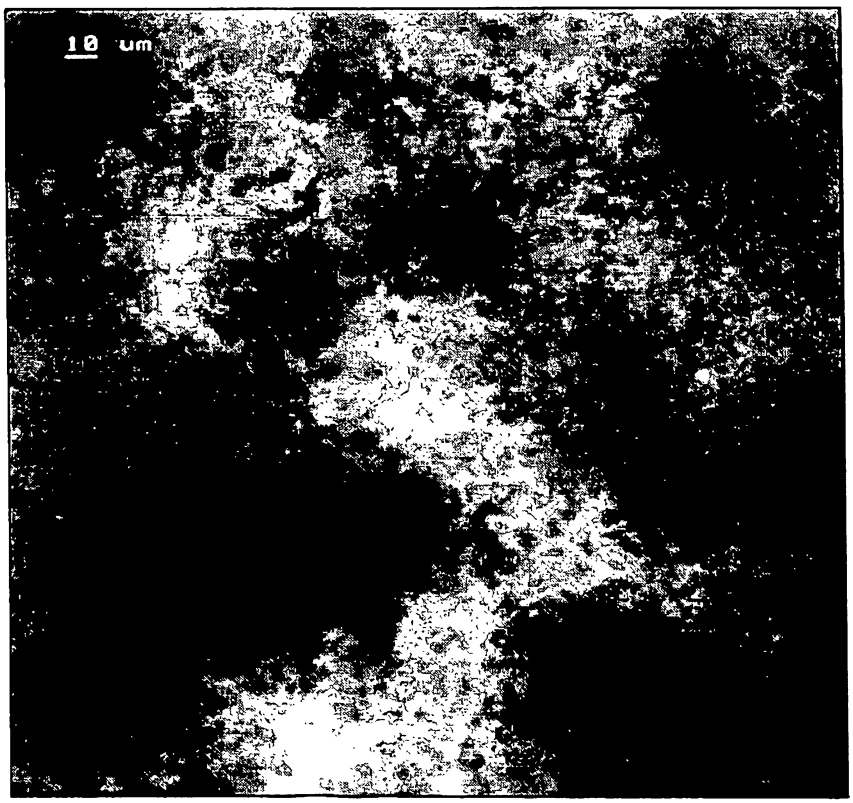

FIG. 4



FIG. 5

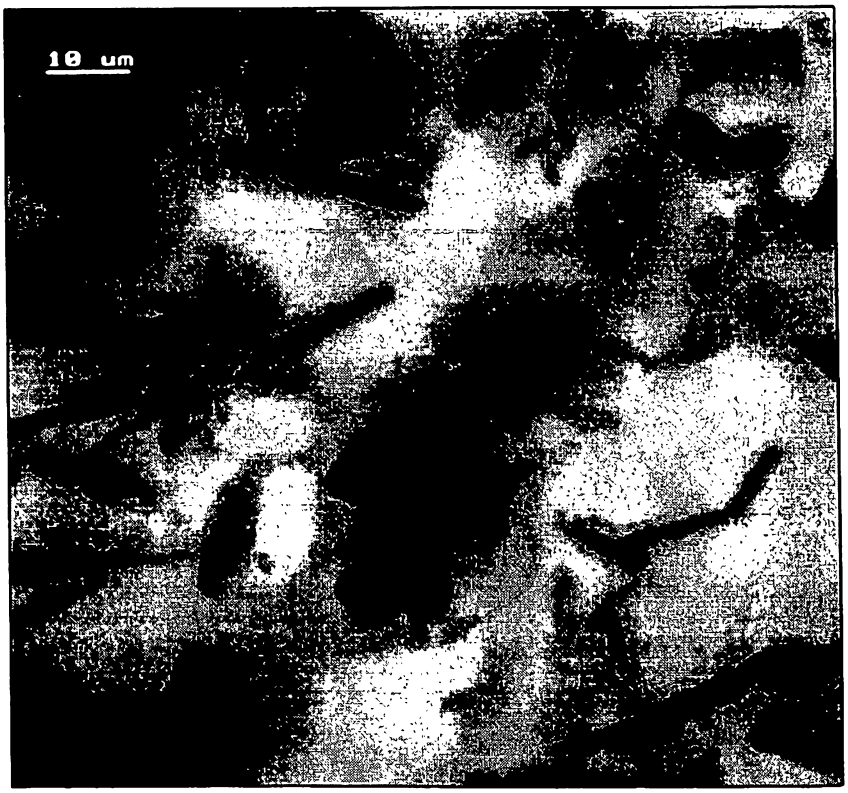

FIG. 6