July 27, 1937. E. RACZ 2,088,434

CALCULATING MACHINE

Filed Aug. 2, 1933 4 Sheets-Sheet 1

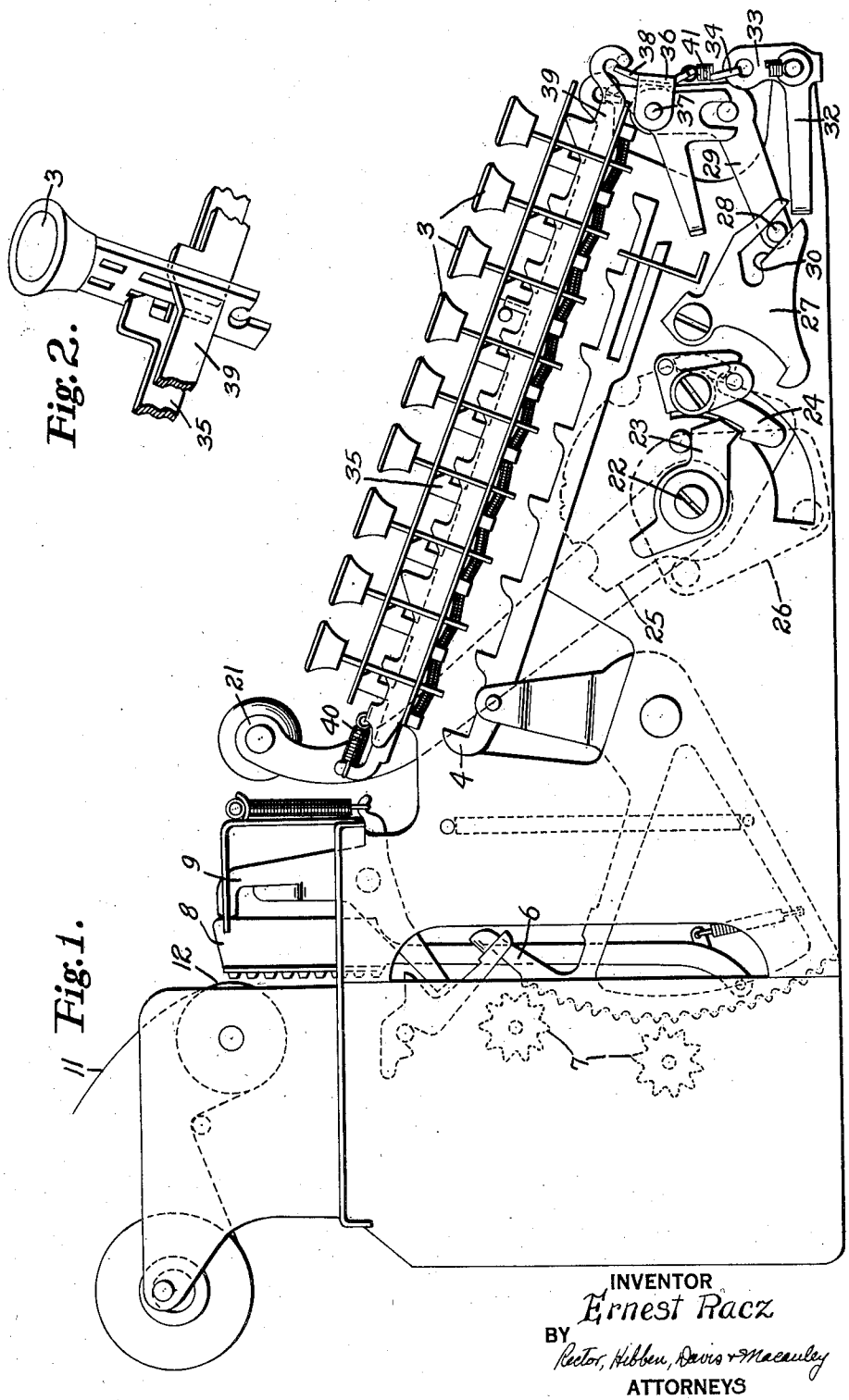

INVENTOR
Ernest Racz
BY
Rector, Hibben, Davis & Macauley
ATTORNEYS

July 27, 1937. E. RACZ 2,088,434

CALCULATING MACHINE

Filed Aug. 2, 1933 4 Sheets-Sheet 2

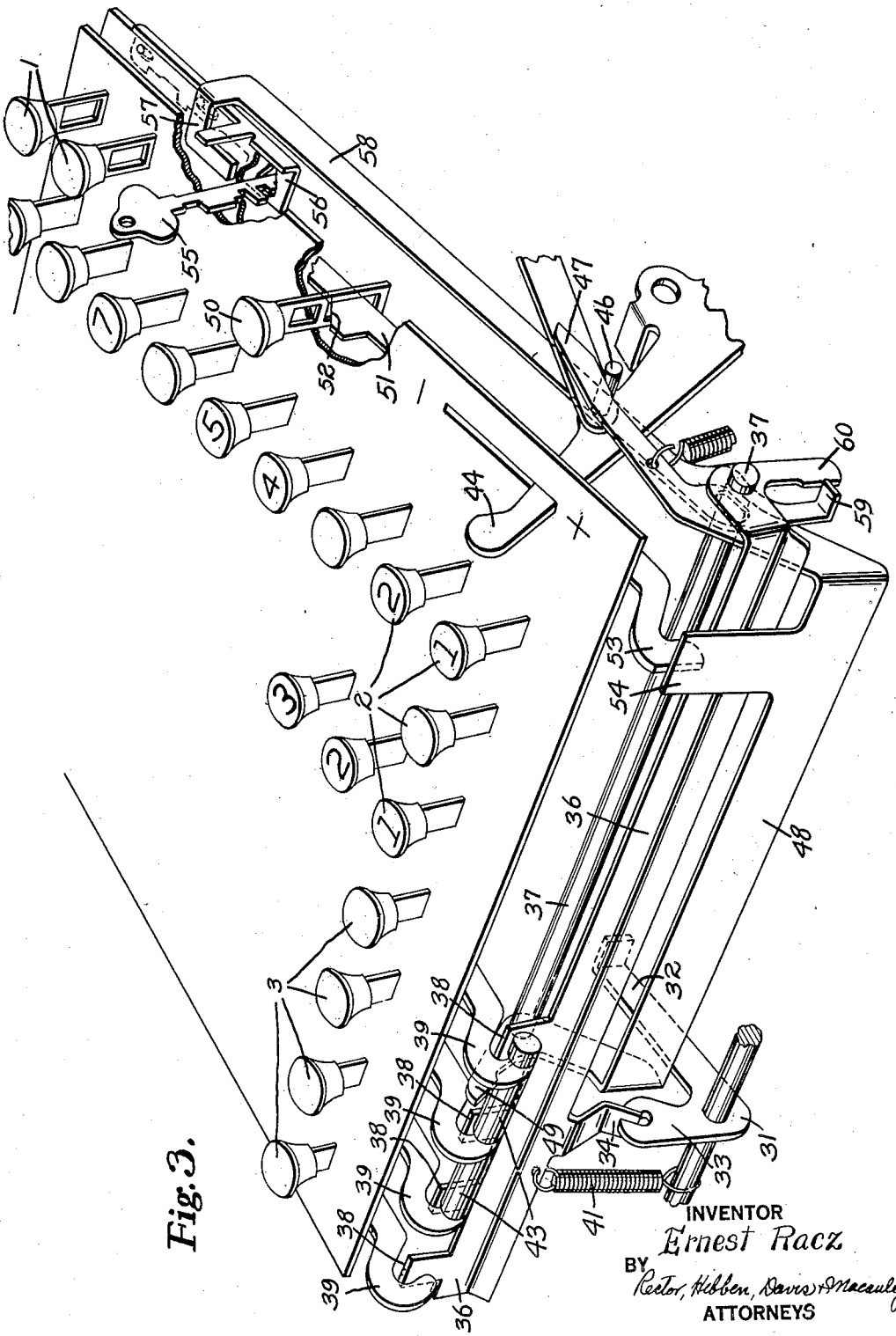

Fig. 3.

INVENTOR
Ernest Racz
BY
Rector, Hibben, Davis & Macauley
ATTORNEYS

July 27, 1937. E. RACZ 2,088,434

CALCULATING MACHINE

Filed Aug. 2, 1933 4 Sheets-Sheet 3

Fig. 4.

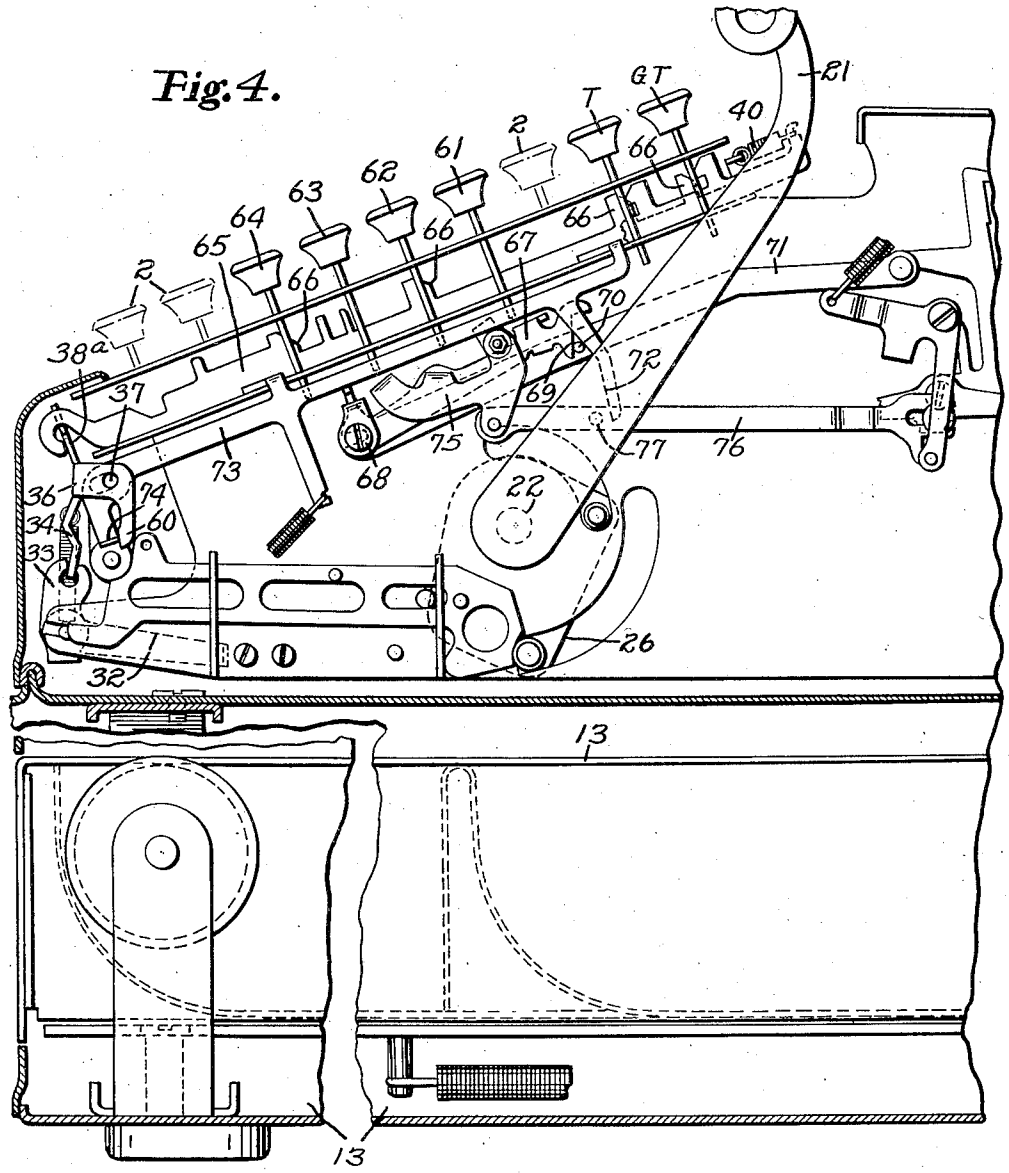

INVENTOR
Ernest Racz
BY
Rector, Hibben, Davis & Macauley
ATTORNEYS

July 27, 1937. E. RACZ 2,088,434

CALCULATING MACHINE

Filed Aug. 2, 1933 4 Sheets-Sheet 4

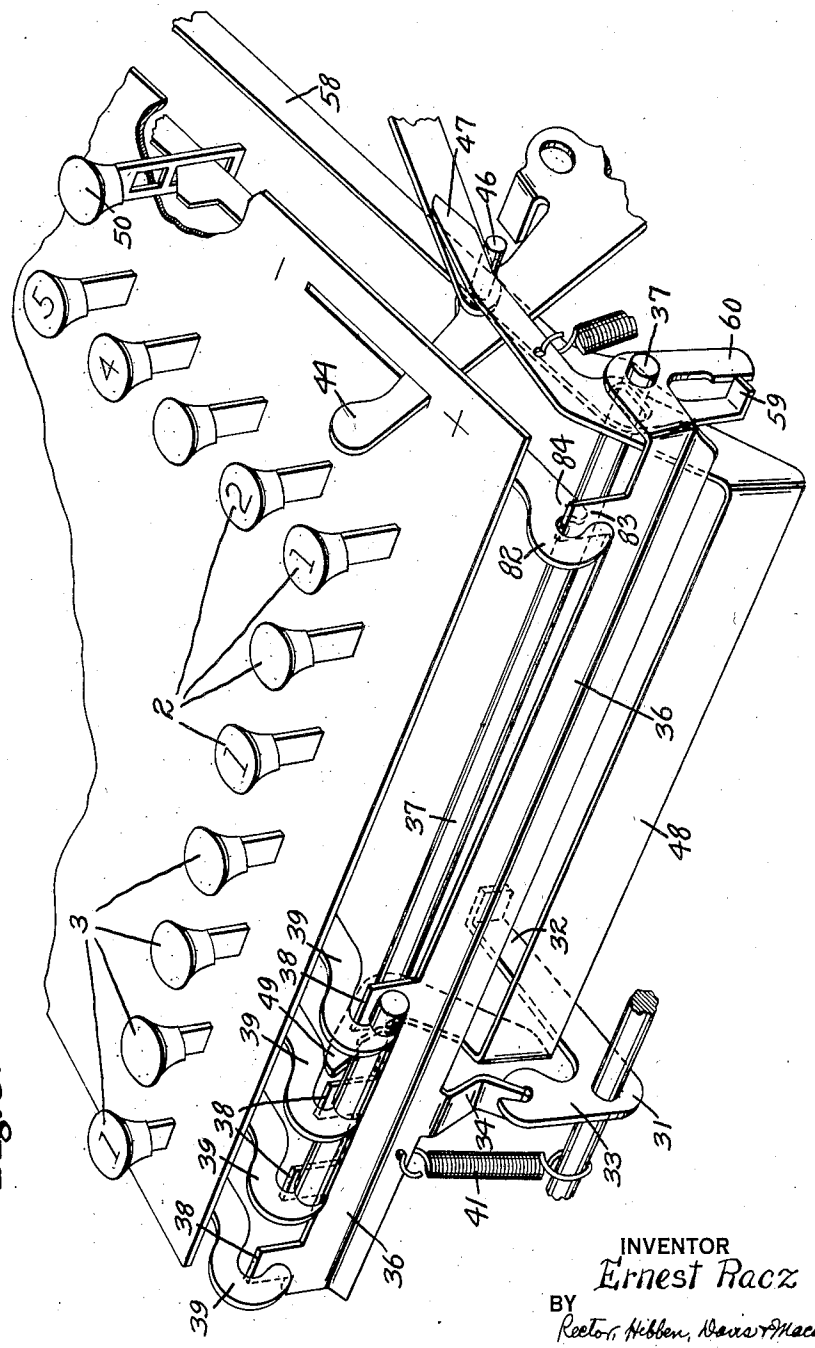

Fig. 5.

INVENTOR
Ernest Racz
BY
Rector, Hibben, Davis & Macauley
ATTORNEYS

Patented July 27, 1937 2,088,434

UNITED STATES PATENT OFFICE

2,088,434

CALCULATING MACHINE

Ernest Racz, Detroit, Mich., assignor to Burroughs Adding Machine Company, Detroit, Mich., a corporation of Michigan

Application August 2, 1933, Serial No. 683,237

4 Claims. (Cl. 235—130)

This invention relates to calculating machines, and more particularly to a calculating machine having a mechanism embodied therein generally termed an "enforced designation" mechanism, whereby it is necessary for the operator to depress one or more designation keys to condition the machine for operation.

Mechanisms for this general purpose have been used before in calculating machines but, in each instance, it has been necessary to depress a designation key in one column or in each of a plurality of columns or banks of designation keys. In other words, if three columns of designation keys were provided, it was necessary to depress a key in each of the three columns before the machine could be operated.

It is the purpose of this invention to provide a construction which increases the flexibility and adaptability of the machine, particularly as to the "enforced designation" mechanism.

More specifically, it is the purpose of this invention to provide a construction whereby certain designation keys may be grouped, each of which groups may contain one or more banks of keys, each bank comprising one or more individual keys, and so arranged that it is only necessary to depress any one key of the group instead of every key in the group to release the enforced designation mechanism and whereby the enforced designation mechanism may be controlled by and/or partially or totally disabled by certain control keys. Other novel features and resultant advantages will be apparent, to those skilled in the art, from a consideration of the following description of one embodiment of this invention given in connection with drawings, in which,—

Figure 1 is a left side elevation showing a calculating machine embodying this invention;

Fig. 2 is a detailed perspective of one of the designation keys and portions of the associated mechanisms;

Fig. 3 is a perspective view of a portion of the keyboard and associated operating mechanisms, parts thereof being broken away for clarity;

Fig. 4 is a right side elevation of a machine embodying a modified form of this invention; and

Fig. 5 is a further modified form of this invention showing one control key for disabling both groups, or all of the designation keys instead of only one group as in Fig. 3.

The invention is illustrated as being applied to a "Burroughs" portable calculating machine combined with a cash drawer of the type disclosed in the Horton Patent No. 1,853,050 and in my prior application, Serial No. 503,690, filed December 30, 1930.

The construction of the calculating machine is well known and accordingly will be described only briefly, it being understood that the invention, although particularly useful in connection with cash drawer type machines, can also be applied to machines of other makes and types.

Calculating machine in general

In the illustrated form of this invention, the machine is provided with a bank of control keys 1, three banks of amount keys 2, and four banks of designation keys 3, the 4th, 5th, and 6th banks of keys being coupled together as a group and the 7th bank being a single bank or group. The control keys include the total key, sub-total key, error key, non-add key, and other keys not shown. The amount keys control the forward movement of differential stop bars 4 connected to actuator racks 6 with which one or more registers 7 are adapted to cooperate. The actuator racks 6 also control suitable printing mechanisms including type bars 8 and hammers 9 which cooperate to print upon a roll of paper 11 traveling around a platen 12.

The calculating machine is mounted upon a cash drawer housing 13 which contains a cash drawer, the latter being controlled by the suitable and desirable control keys as shown and described in the above application, Serial No. 503,690.

The illustrated machine is a hand-operated machine although it could be operated by a motor as shown in the heretofore mentioned Horton patent. In the illustrated hand operated machine the operating handle 21 is utilized to oscillate the main shaft 22 to which is secured a dog 23 which, upon the forward stroke of the machine engages a pivoted pawl or hook 24 carried by the full stroke sector 25 to which is drivingly secured the driving plate 26 (Fig. 4) which operates certain portions of the calculating mechanism. A pivoted latching dog 27 is provided for disabling hook 24 if the machine has not been properly conditioned for use. The dog 23, hook 24 and latch 27 constitute a disconnectible connection between the driving shaft and the machine proper which disconnectible means is utilized to enforce depression of one or more designation keys. In normal operation of the machine, i. e., when properly conditioned, a stud or pin 28 carried by one arm of a crank 29 moves up into a cam slot 30 formed in latch 27 to withdraw the latch from operative engagement with hook 24 to permit full operation of

the operating mechanisms. For additional details as to the construction of the calculating machine, reference is made to the heretofore mentioned Horton patent.

Enforced designation released by any key in a group of banks

In some classes of work such, for example, as oil station work, it is desirable not only to have the clerk or attendant depress a key in a bank of keys indicating what has been sold, but also to force him to record the quantity in gallons or quarts. But the "quantity" sold may run into several figures and it thus becomes necessary to have a group of banks of keys with enforced designation for the group. The enforced designation feature should be releasable if one key in any bank is depressed or if keys in two or three banks are depressed. Provision has been made for accomplishing this result as follows:

A detent in the form of a bell crank 31 has one arm 32 movable into position to engage latch 27 to prevent its movement out of its hook engaging position in which it engages hook 24. Bell crank 31 is controlled by one or more designation keys of a plurality of banks of keys and for this reason has an upwardly extending arm 33 bifurcated to receive a downwardly projecting lug 34 of a bail 36 extending across the forward end of the machine and pivoted upon a shaft 37. Bail 36 is also provided with a series of upwardly extending lugs or fingers 38 which extend up and behind the hooked forward ends of slides 39, there being one lug and one slide for each bank of designation keys. Slides 39 extend through slots in designation keys 13 formerly occupied by keyboard spacing plates common to this type of machine. The slides 39 are urged rearwardly by the springs 40 (Figs. 1 and 4) when the key locking slides 35 (Fig. 2) release the keys for rearward movement. Bail 36 is urged in a counterclockwise direction (Figs. 3, 4 and 5) by a spring 41 which urges lugs 38 into engagement with the hooked ends of the slides 39.

In the illustrated embodiment of this invention, the left bank of designation keys is employed as an independent bank whereas the three adjoining banks are coupled together as a single group. For this purpose, the three slides 39 of the 2nd, 3rd and 4th banks from the left are connected together by a rod 43 whereby depression of any one key in any of the three key banks associated with the three connected slides moves all of the slides. Bail 36, however, will not be released unless a key is depressed in the outer single designation bank at the same time a key is depressed in one of its inner three coupled designation key banks. In other words, there is a group control for three banks of designation keys and an independent control of one bank, although any key in the single bank will, of course, move its associated slide 39.

In certain uses of the machine it may not be desirable to have enforced or compulsory depression of keys in all the groups of designation keys. In other words, it may be desirable to disable the enforced designation mechanism associated with one or more groups of designation keys. The present invention provides for such a contingency by providing means for partially disabling the enforced designation mechanism as to certain keys, i. e., disabling one or more of the groups such as the group comprising the three coupled banks of designation keys.

Partial disablement of enforced designation by subtraction conditioning means

In connection with an enforced designation machine such as just described, it is sometimes desirable to make entries where the only record that is wanted, besides the amount of the entry, is a record of the clerk who conducted the transaction. For example, if a quantity of money is "paid out", the desired record is a record of the particular clerk who paid out the money and the amount of the transaction, which transaction should be a subtract operation. This kind of an operation should be possible without requiring depression of all the different kinds of designation keys. Provision has accordingly been made for disabling part of the enforced designation feature by means of the subtraction conditioning means, while leaving other parts operative.

For this purpose the add subtract lever 44 is provided with a pin 46 which engages a cam arm 47 of a bail 48 pivoted upon shaft 37 which bail extends partially across the front of the machine and terminates in a side arm 49 also pivoted on the shaft 37 and extending upwardly and behind coupling rod 43 whereby rocking of bail 48 will withdraw the three connected slides 39, thus disabling the enforced designating effect of all three banks of designation keys and leaving only the outer slide 39 in engagement with bail 36 and in enforced designation control of the machine.

Partial disablement of enforced designation by control key

There are also transactions that are not "paid out" transactions which require only a record of the clerk and the amount of the transaction. For example, it may be desired to open the cash drawer by means of the "no sale" key. In such event, all that is wanted is a record of the clerk who opened the cash drawer and it is therefore not desired to depress all the enforced designation keys. Provision has been made to accomplish this result as follows:

In the present instance an operation control key 50 is utilized which also disables the coupled three designation banks. For this purpose, slide 51 is utilized which extends through a slot in control key 50 and is provided with a cam shoulder 52 arranged to be engaged by the cross bar of the slot in control key 50 whereby depression of the key will move slide 51 forwardly. The forward end of slide 51 terminates in an abutment 53 positioned to engage a lug 54 on bail 48 whereby a forward movement of slide 51 will rock bail 48 counterclockwise and disable the three slides 39 that are coupled in one group.

Complete disablement of enforced designation by a key controlled lock

In many lines of business a cash machine is not only needed, but a calculating machine is useful to calculate the results of a day's business or to perform other calculating operations in general. The present machine is adapted for this purpose and the manager may lock the machine in a condition for use as a cash machine with enforced designation or in condition to be used as a calculating machine without the enforced designation.

To disable all enforced designation mechanisms, that is, both sets or groups of designa-

tion keys, from enforced depression, a normalizing lock (Fig. 3) operated by a so-called manager's key **55** is provided, which, when inserted in the lock and turned, moves a slide **56** rearward, thereby causing an upstanding projection of the slide to engage an offset lug **57** of a slide **58** and move said slide **58** rearward, thereby causing the lug **59** through an extension **60** to rock bail **36** counterclockwise to pull all four slides **39** forward to disable all groups of designation keys from enforced depression. The machine is thus normalized as to all banks of keys to the right of the banks of designation keys. The tension of the springs **40** when returning the slides **39** and **51** rearward is sufficient to overcome the tension of the spring **41**, consequently counterclockwise rotation of the bail **36** will restore the slide **58** to its normal position when key **55** is removed.

By the use of key **55** an authorized person may disable all the enforced designation mechanisms so that he can use the normalized portion of the machine for checking or other purposes without his having to depress designation keys with every item he enters.

Enforced designation by certain control keys and disablement of enforced designation by other control keys

Under certain circumstances it is desirable to disable the entire enforced designation feature by means of some of the control keys which condition the machine to perform certain functions and to have other control keys form a part of the enforced designation feature. For example, a duplex register machine may be provided with a total key T (Fig. 4) for taking a total from the detail register; a grand total key GT for taking a total from the grand total register; a "no sale" key **61**; a "cash" key **62**; a "rec'd acc't" key **63**; and a "change" key **64**. This machine may then have a bank of enforced designation keys for enforcing registration of the kind of article sold and a group of banks for enforcing registration of the quantity sold. When the "no sale" key **61** is depressed, or when the "rec'd acc't" key **63** is depressed it is not desired to enforce registration of the kind of article or the quantity as no kind or quantity are involved in such a transaction.

Likewise when a total or a grand total are taken it is not desired to enforce registration of kind of article or quantity. On the other hand, both "change" and "cash" sales should be recorded as such and the operator should be forced to depress the right key.

Where the enforced depression of designation keys is to be placed under control of certain of the operation control keys and other of the operation control keys are to be utilized to disable the entire enforced designation feature of the machine, a slide **65** passes through slots in all of the operation control keys and in the illustrated form is provided with four cams **66** positioned to be engaged by keys GT, T, **62** and **64** to move the slide forwardly. The forward end of slide **65** terminates in a hook adapted to engage a lug **38a** similar to the lug **38** upon a bail **36**. As in the case of the slides **39**, slide **65** retains bail **36** against counterclockwise movement until slide **65** is moved forwardly by operation of either of the keys GT, T, **62** and **64**. Upon depression of one of these four keys, slide **65** is moved forwardly and it releases bail **36** from its control, although bail **36** still remains under control of the other enforced designation keys and slides, which enforced designation keys must be depressed as formerly before the machines can be operated.

Provision is made whereby depression of either key **63** or **61** will disable the entire enforced designation mechanisms. For this purpose, a lever **67** pivoted at **68** is disposed beneath key **61** and is rocked clockwise upon depression of key **61** to cause the rear cam edge **69** of the lever to engage a stud **70** carried by a lever **71**. Stud **70** engages a tail **72** of a slide **73** and moves the latter rearward on its slotted connection with shaft **37** to cause a downwardly projecting finger **74** on slide **73** to engage arm **60** of bail **36** to rock the latter counterclockwise to disable the entire enforced designation feature as previously described.

Depression of key **63** performs the same function by engagement of pivoted arm **75** connected to a link **76** which carriers a pin **77** which also engages the tail **72** and thus moves bail **36** counterclockwise in the manner previously described to disable the enforced designation feature. Thus depression of keys **61** or **63** disables detent **32** by rocking it out of the path of the latch **27** and permits operation of the machine without depression of any designation key.

Complete disablement of enforced designation by a control key

A modified form of construction for completely disabling the enforced designation feature by means of a control key is shown in Fig. 5. A slide **80** which takes the place of slide **51** of Fig. 3 passes through the slotted portion of the key **50**, has a cam shoulder **81** which is engaged by the cross bar in the slot of key **50** to cam the slide **80** forward when key **50** is depressed and terminates in a hooked forward end **82**. A lug **83** similar to the lugs **38** extends upward from the bail **36** and engages hook shaped end **82** of slide **80**. The front portion of the hook **82** engages the front face of the lug **83** and a nose **84** projecting from the lower forward end of slide **80** engages the rear face of the lug **82**, so that when the control key **50** is depressed to move slide **80** forward, nose **84** engaging the rear face of lug **93** will rock bail **36** counterclockwise and through the medium of the four lugs **38** will pull the slides **39** forward to disable all of the enforced designation mechanisms as previously described in connection with the lock keys **55**. Slides **80** and **39** will be restored rearward by the springs **40**, thereby restoring bail **36** clockwise against the tension of spring **41**.

From the foregoing description, it will be apparent that there has been provided a calculating machine embodying a plurality of banks of designation keys, certain banks of which are combined into a group and are controlled by any one key within the group, and that one or more groups can be disabled by operation of certain other keys such as operation control keys or a conditioning key such as the subtract lever, or that the entire designation means can be disabled by operation of one or more keys or other devices and that certain control keys may be constructed to be part of the enforced designation mechanism whereas others disable all or part of the enforced designation mechanism.

It will be apparent to those skilled in the art that minor changes may be made in details of the construction without departing from the

spirit and scope of this invention as defined in the appended claims.

I claim:

1. A calculating machine having a plurality of banks of depressible keys, means for operating said machine, disconnectible connections between said operating means and said machine, means for disconnecting said connections, a bail extending across the end of said banks of keys and operatively connected to said latter means, a movable slide for each of a plurality of banks of keys, each slide having portions for restraining said bail, each of said slides being movable to release said bail therefrom upon depression of a key in its respective bank, said bail being restrained by each of said slides not moved, means connecting a predetermined portion of said slides into a group whereby depression of any key in the banks in said group will move all of the slides in said group, and means for disabling said group the remaining slides being unaffected by said disabling means.

2. A calculating machine having a plurality of banks of depressible keys including designation keys, control keys, and amount keys, means for operating said machine, and mechanisms associated with said designation keys normally operative to require the depression of a key in one or more banks of designation keys in order to operate said machine, means controlled by one of said operation control keys for disabling the mechanisms associated with predetermined designation keys without affecting others, and means controlled by another of said control keys for disabling all of said mechanisms associated with said keys required to be depressed to permit operation of said machine without depression of said keys.

3. A calculating machine having a plurality of banks of depressible keys including designation keys, operation control keys, and amount keys, means for operating said machine, and mechanisms associated with said keys normally operative to require the depression of a key in one or more banks of said designation keys in order to operate said machine, a subtract lever for conditioning said machine for subtraction, means controlled by one of said control keys for disabling predetermined mechanisms, means controlled by said subtract lever for disabling predetermined mechanisms without affecting others and a lock for disabling all of said mechanisms associated with said keys required to be depressed in order to permit operation of said machine without depression of said keys.

4. A calculating machine having a plurality of banks of depressible keys including designation keys, operation control keys, and amount keys, means for operating said machine, mechanisms associated with said designation keys normally operative to require the depression of a designation key in one or more banks thereof in order to operate said machine, said mechanisms including means connecting a plurality of said designation key banks together to compromise a group whereby depression of any one of the keys in the connected key banks will operate all of said mechanisms associated with the keys in said group, a subtract lever for conditioning said machine for subtraction, means controlled by said subtract lever for disabling the mechanisms associated with said grouped keys without affecting others, and means controlled by one of said operation control keys for disabling all of said mechanisms.

ERNEST RACZ.

CERTIFICATE OF CORRECTION.

Patent No. 2,088,434. July 27, 1937

ERNEST RACZ.

It is hereby certified that error appears in the printed specification of the above numbered patent requiring correction as follows Page 4, first column, line 21, claim 1, for the word "group" read grouped slides; and same page, second column, line 27, claim 4, for "compromise" read comprise; and that the said Letters Patent should be read with these corrections therein that the same may conform to the record of the case in the Patent Office.

Signed and sealed this 21st day of September, A. D. 1937.

(Seal)

Henry Van Arsdale
Acting Commissioner of Patents.