United States Patent [19]

Lanzillotta

[11] **3,820,551**

[45] **June 28, 1974**

[54] **HAIR DRYER AND GROOMER**

[75] Inventor: **Tony Lanzillotta,** Toronto, Ontario, Canada

[73] Assignee: **The Raymond Lee Organization, Inc.,** New York, N.Y.

[22] Filed: **June 20, 1973**

[21] Appl. No.: **371,755**

[52] **U.S. Cl.** **132/11**

[51] **Int. Cl.** **A45d 24/00**

[58] **Field of Search** 132/11, 123, 339, 149, 132/9, 7, 37; 219/39

[56] **References Cited**

UNITED STATES PATENTS

1,691,244	11/1928	Hussey	132/37
2,576,368	11/1951	Steiner	132/11
2,753,434	7/1956	Storm, Jr.	219/39
3,148,686	9/1964	Cournoyer	132/149
3,702,616	11/1972	Mercer	132/9

Primary Examiner—G. E. McNeill

Attorney, Agent, or Firm—Howard I. Podell

[57] **ABSTRACT**

A portable hair dryer which blows hot air through an outlet surrounded by individual flexible rods, the rods serving as means to curl or groom the hair while the hair is being dried by the blast of hot air. The device is compact and can be hand-held, being powered by an extension line cord.

2 Claims, 5 Drawing Figures

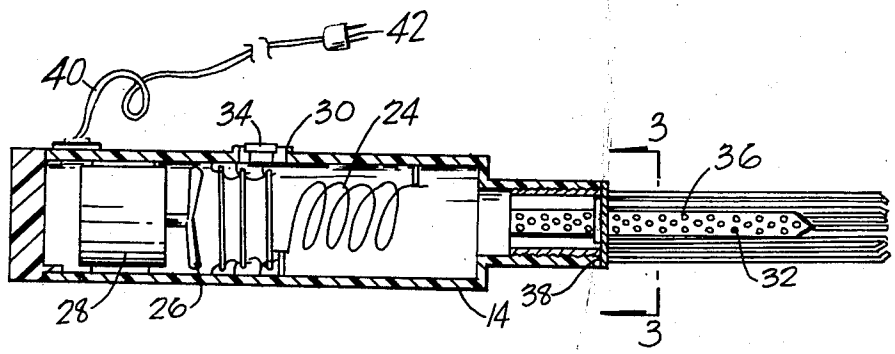

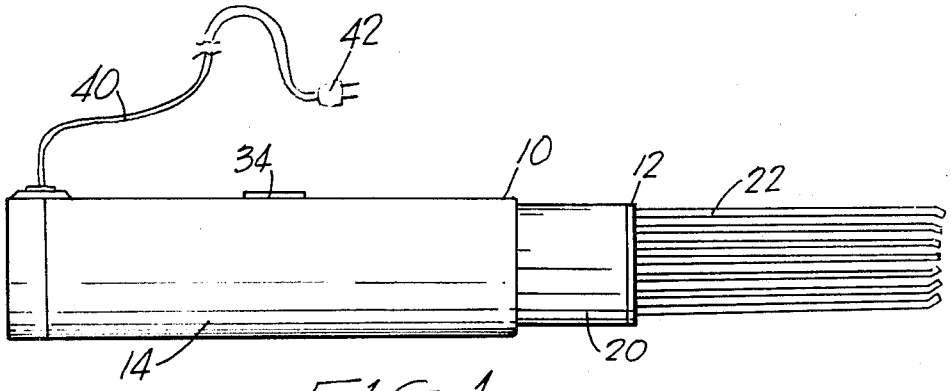

FIG. 1.

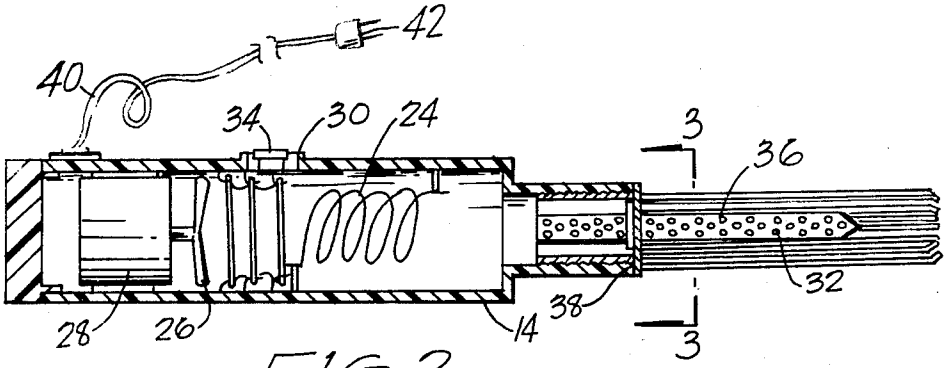

FIG. 2.

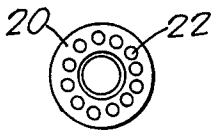

FIG. 3.

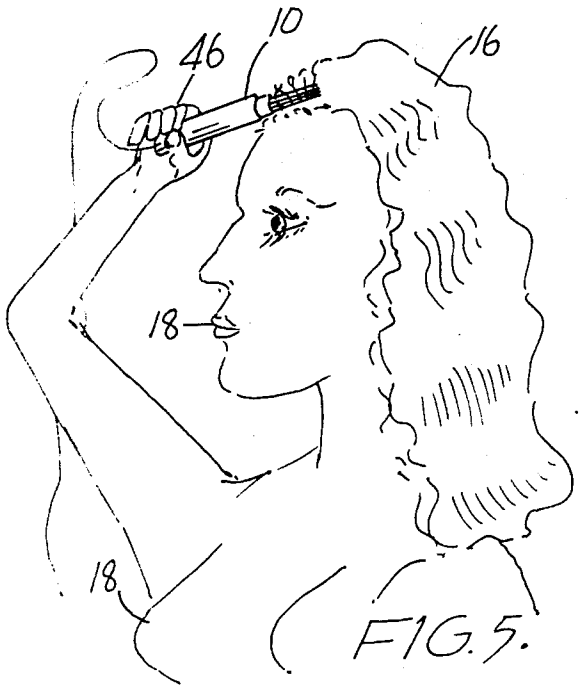

FIG. 5.

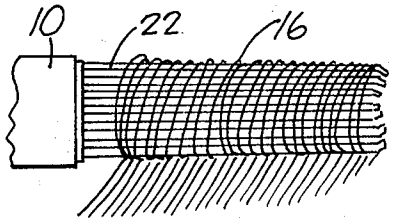

FIG. 4.

HAIR DRYER AND GROOMER

SUMMARY OF THE INVENTION

This invention relates to a compact hair dryer which can be used to groom and curl hair as the hair is being dried.

The advantage of this invention is that it may be used to curl, comb, and shape the wet hair being dried.

A further advantage of this invention is that it is compact and can be used while held in one hand.

The device is in the form of a cylindrical housing enclosing a motorized fan which maintains a flow of air over the coils and through a circular outlet duct which is surrounded by a series of thin rods. A lock of hair can be twirled around the rods surrounding the outlet for purposes of curling, combing, or shaping the hair.

BRIEF DESCRIPTION OF THE DRAWINGS

The objects and features of the invention may be understood with reference to the following detailed description of an illustrative embodiment of the invention, taken together with the accompanying drawings in which:

FIG. **1** is a side view of the device;

FIG. **2** is a cross-sectional view of the device;

FIG. **3** is a front view of a rod holder;

FIG. **4** is a side view of a rod holder attached to the device; and

FIG. **5** is a perspective view of the device in use by a user.

DESCRIPTION OF THE PREFERRED EMBODIMENT:

Turning now descriptively to the drawings, in which similar reference characters denote similar elements throughout the several views, FIG. **1–2** illustrates the combination hair dryer and groomer **10.** The device is powered by a flexible line cord **40** terminating in the conventional line plug **42** and is enclosed by a cylindrical housing **14** in which a switch **34** is mounted. A fan **26** driven by a motor **28** inside the housing **14** blows air past heater coils **24** and through a cylindrical exhaust tube **36** in which perforations **32** are fitted. A series of flexible rods **22** are fitted about the exhaust tube **36** with the rods **22** being anchored at one end in a holder unit **12** which is threadably engaged into a circular collar **20** surrounding the exhaust tube **36.** As shown in FIGS. **3–5** strands of hair **16** may be wrapped around the outside of the rods **22** to form a curl as the hot air is exhausted through the perforations **32** of exhaust tube **36** to dry the hair as the device **10** is held by a hand **46** of the user **18.**

Since obvious changes may be made in the specific embodiment of the invention described herein, such modifications being within the spirit and scope of the invention claimed, it is indicated that all matter contained herein is intended as illustrative and not as limiting in scope.

Having thus described the invention what I claim as new and desire to secure by Letters Patent of the United States is:

1. A device for grooming the hair while the hair is dried by hot air exhausted by said device unto the hair, comprising a cylindrical enclosure in which a motor and fan is mounted together with electric heating coils through which air is driven by the fan, with the air exiting through a projecting exhaust tube which is perforated about its sides, with the said exhaust tube being surrounded about its sides by a cylindrical structure of flexible rods fastened to a collar surrounding the exhaust tube, said flexible rods serving as a means to curl and comb the hair which is being dried from the exhaust air delivered by the unit, and said rods oriented in parallel configuration to each other and to the exhaust tube axis.

2. The combination as recited in claim **1** in which the flexible rods surrounding the exhaust tube are mounted at one end in the rim of a collar, said collar being fitted with threads so as to engage mating threads in a ring fastened to the housing about the exhaust tube of the unit.

* * * * *