US00D364981S

United States Patent [19]

Horvath

[11] Patent Number: Des. 364,981

[45] Date of Patent: **Dec. 12, 1995

[54] TABLE

[76] Inventor: **Wayne Horvath**, #9 - 7165 Pandora Street, Burnaby, British Columbia, Canada, V5A 1B6

[**] Term: **14 Years**

[21] Appl. No.: **27,770**

[22] Filed: **Aug. 31, 1994**

[30] **Foreign Application Priority Data**

Apr. 11, 1994 [CA] Canada 1994-0711

[52] **U.S. Cl.** **D6/486**; D6/488

[58] **Field of Search** D6/480–489, 495, D6/497, 498, 499, 511, 451; 108/150, 153, 156, 161; 248/188, 188.1, 188.7

[56] **References Cited**

U.S. PATENT DOCUMENTS

D. 164,365	8/1951	Hiebert	D6/486 X
D. 290,796	7/1987	Becker	D6/480
D. 306,107	2/1990	Grosfillex	D6/480
D. 314,680	2/1991	McCarthy et al.	D6/487

OTHER PUBLICATIONS

Interiors, Jun. 1973, p. 33, table at right.
Schoner Wohen, Apr. 1985, p. 202K.
Brown Jordan, c 1986, p. 4, table at bottom.
Brown Jordan, c 1986, p. 15, table at bottom.

Primary Examiner—Janice E. Seeger
Attorney, Agent, or Firm—Brian M. Long

[57] **CLAIM**

The ornamental design for a table, as shown and described.

DESCRIPTION

FIG. **1** is a view in perspective thereof;
FIG. **2** is a top plan view thereof;
FIGS. **3** and **4** are side elevational views of opposite sides thereof;
FIGS. **5** and **6** are front and rear elevational views thereof;
FIG. **7** is a top plan view thereof; and,
FIG. **8** is a view in perspective of a second embodiment of a table showing the new design.

1 Claim, 4 Drawing Sheets

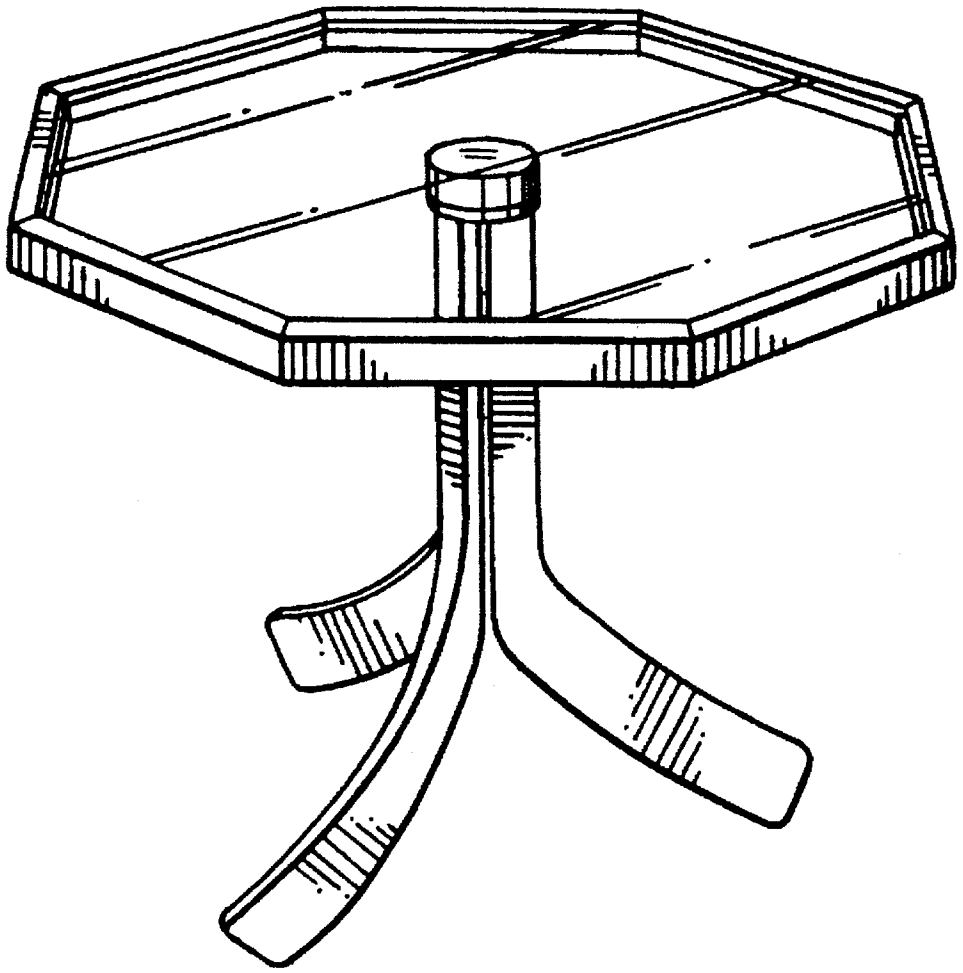

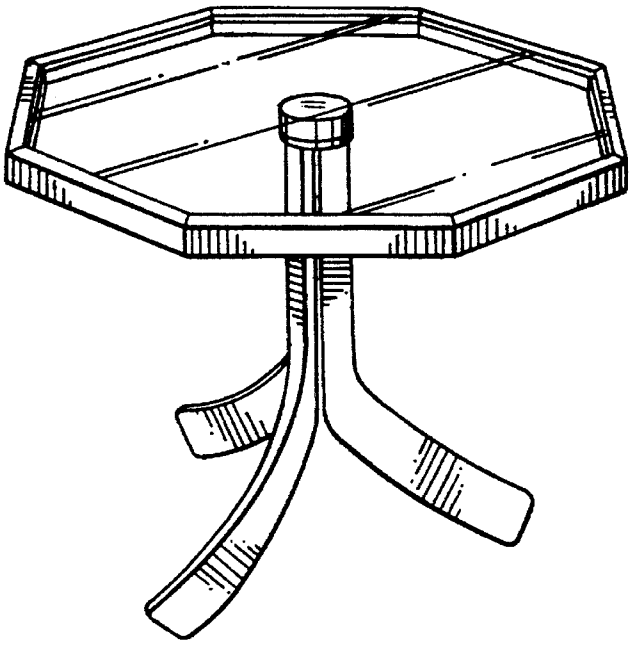

FIG. 1

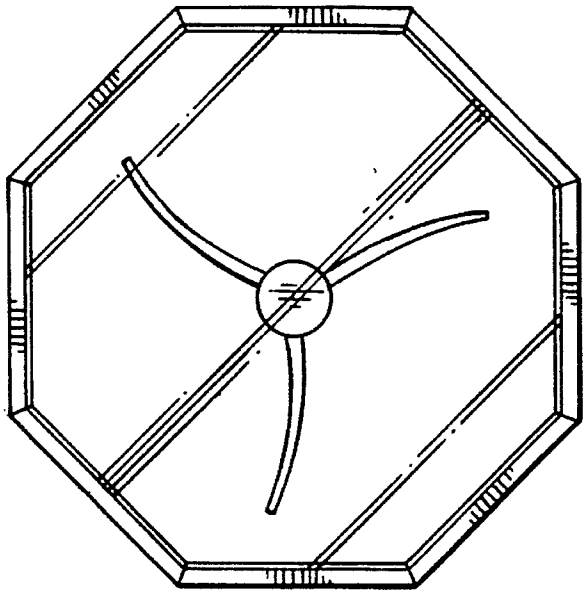

FIG. 2

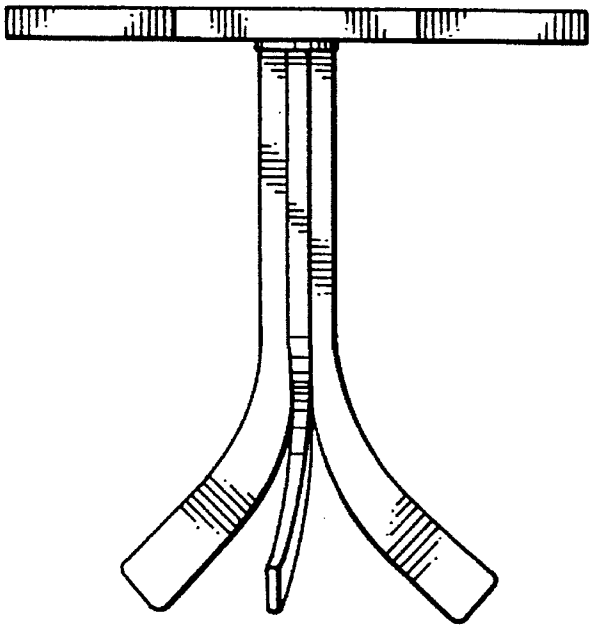

FIG. 3

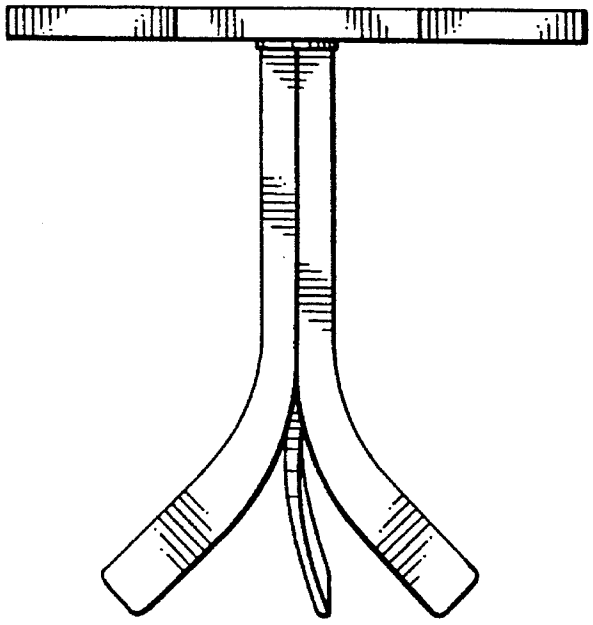

FIG. 4

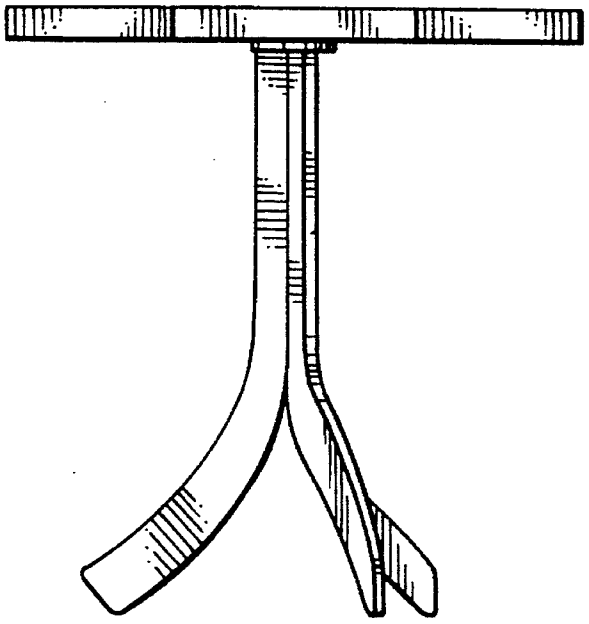

FIG. 5

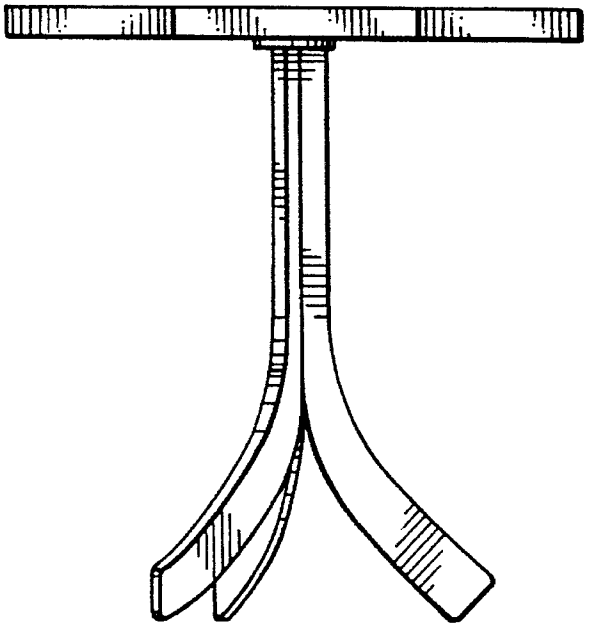

FIG. 6

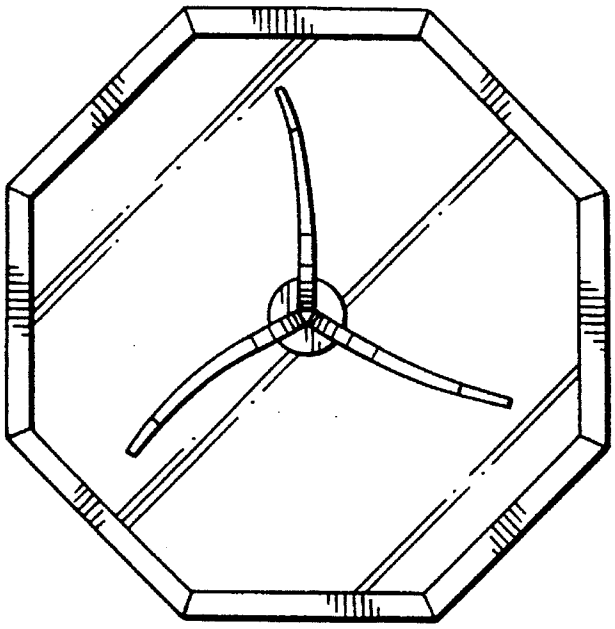

FIG. 7

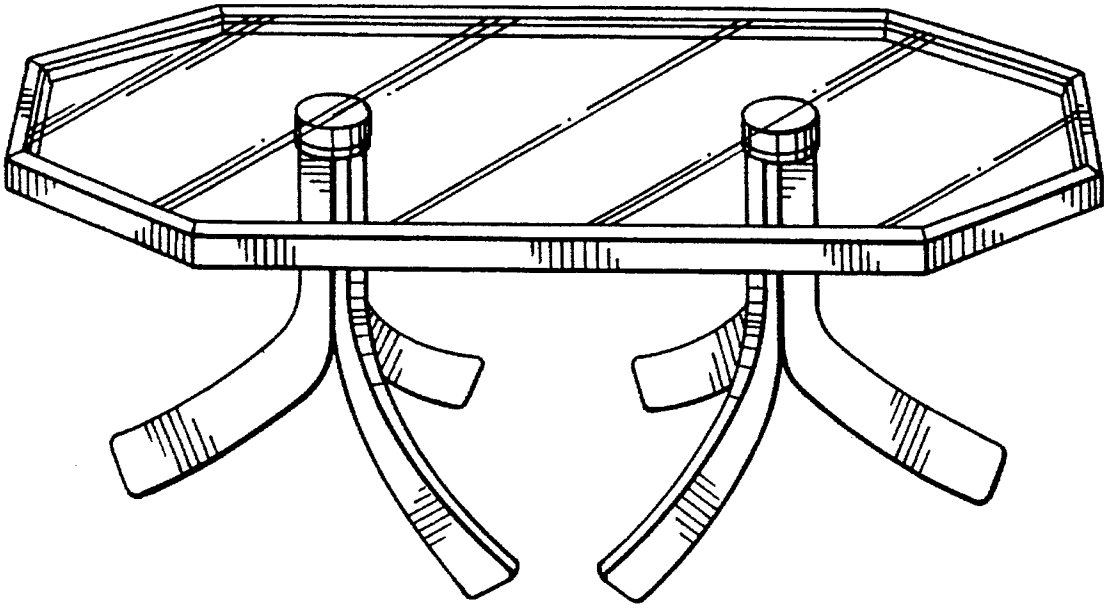

FIG. 8