May 7, 1946. W. A. DRAKE 2,399,915

EXERCISING APPARATUS

Filed Nov. 13, 1945 3 Sheets-Sheet 1

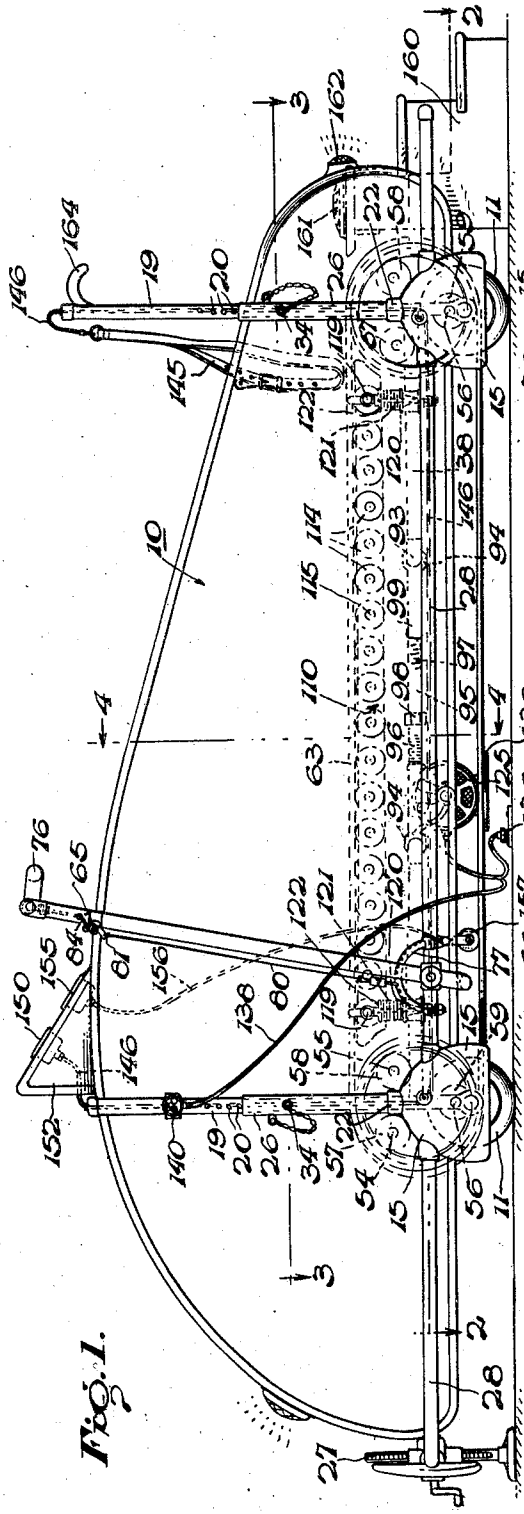

Fig. 1.

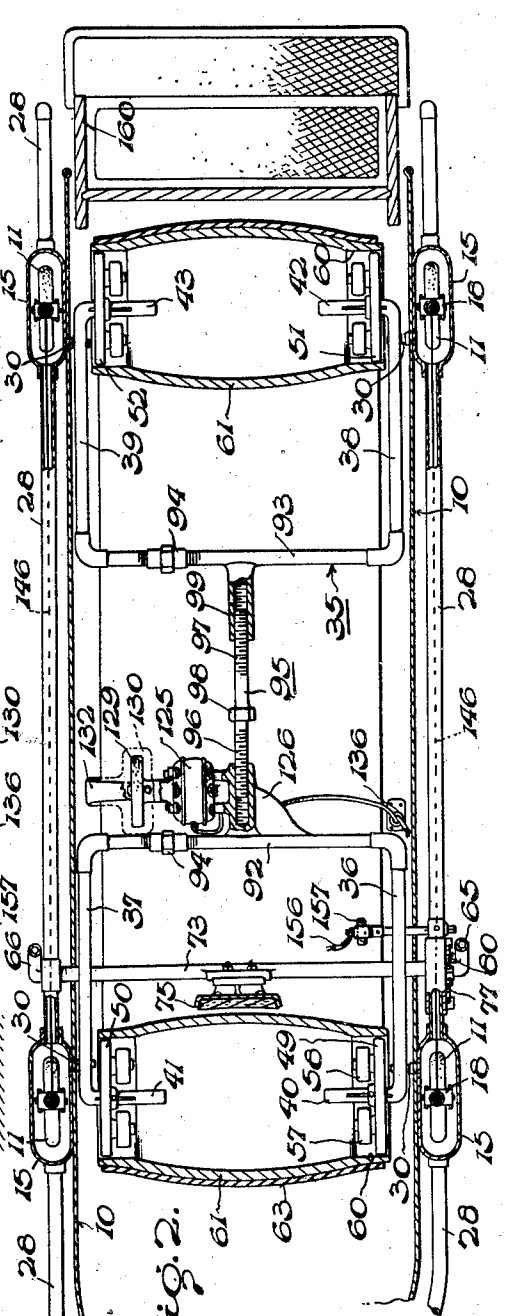

Fig. 2.

INVENTOR.
Ward A. Drake.
BY
Herbert M. Birch
Attorney

May 7, 1946. W. A. DRAKE 2,399,915

EXERCISING APPARATUS

Filed Nov. 13, 1945 3 Sheets-Sheet 2

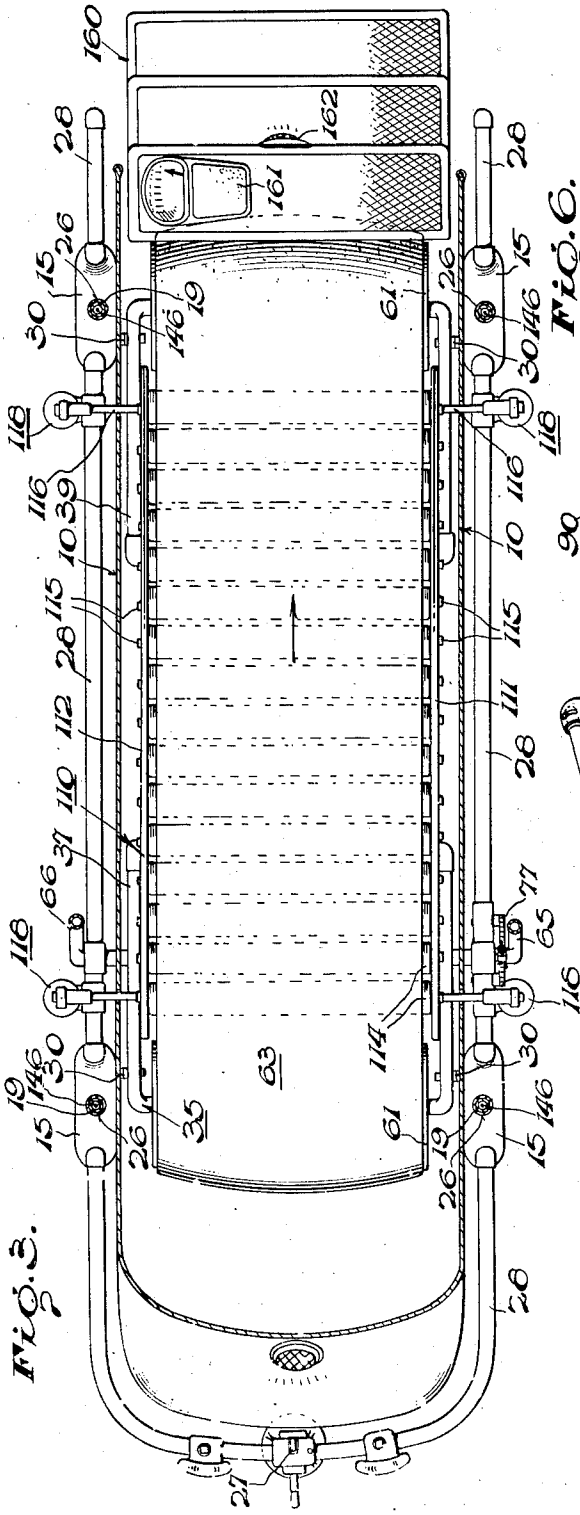

Fig. 3.

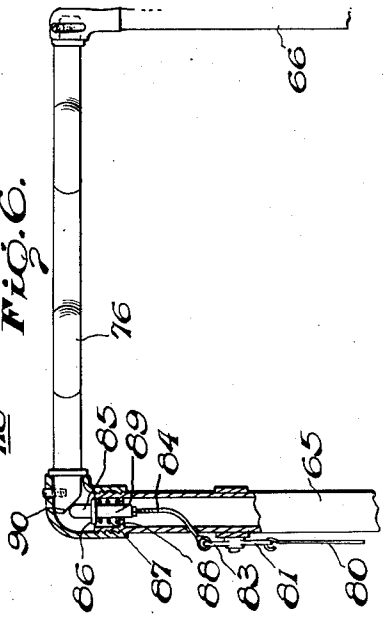

Fig. 6.

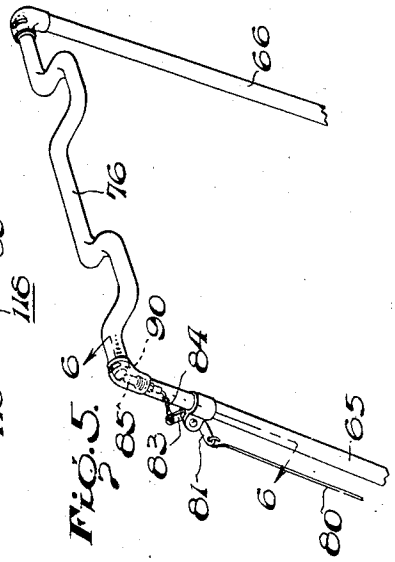

Fig. 5.

INVENTOR.
Ward A. Drake.
BY
Herbert M. Birch
Attorney

May 7, 1946. W. A. DRAKE 2,399,915

EXERCISING APPARATUS

Filed Nov. 13, 1945 3 Sheets-Sheet 3

Fig. 4.

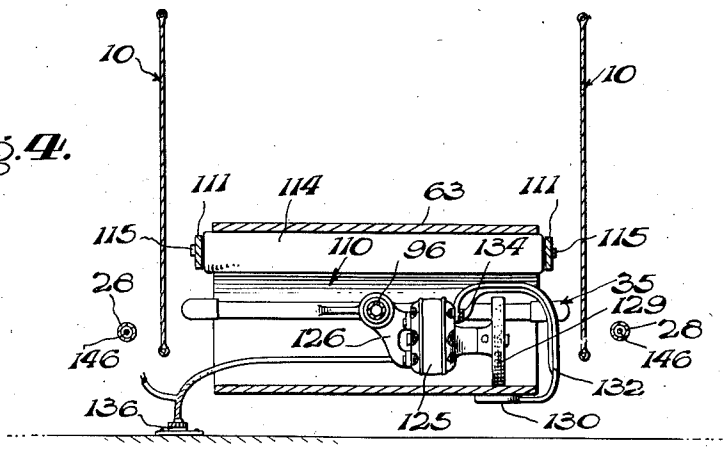

Fig. 7.

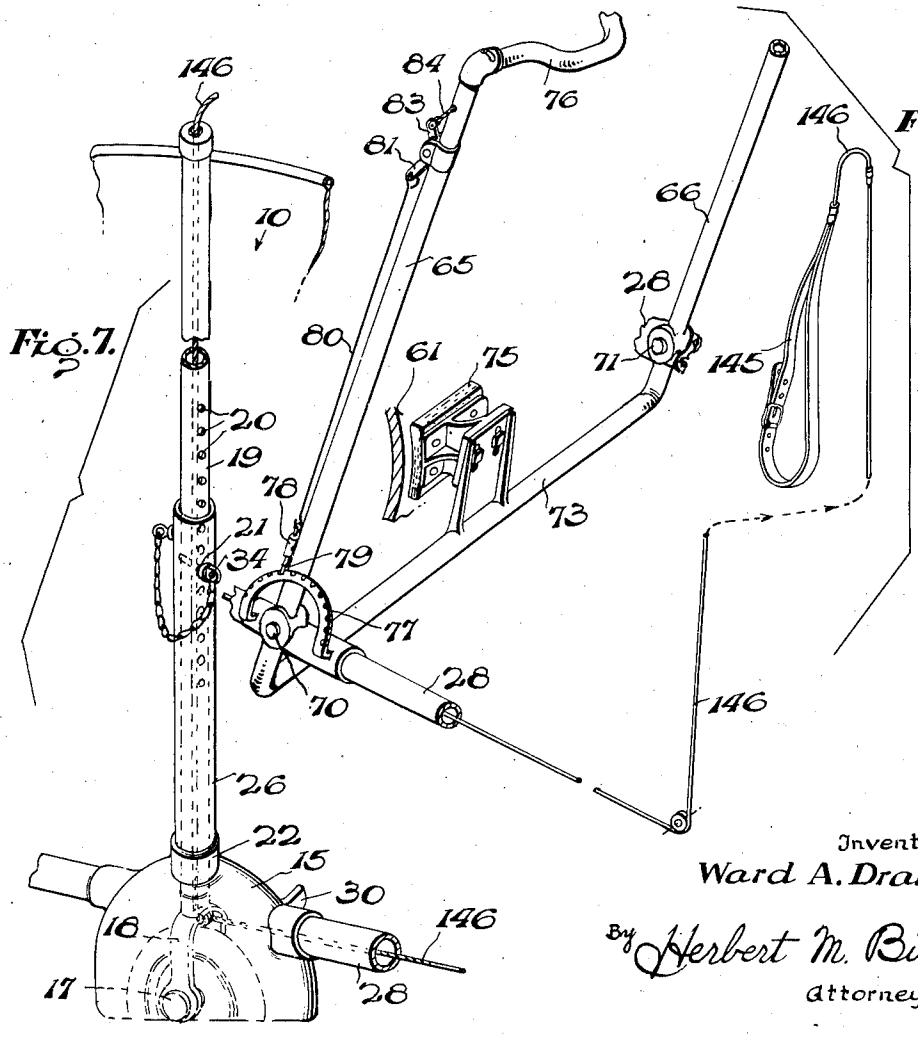

Fig. 8.

Inventor
Ward A. Drake.
By Herbert M. Birch
Attorney

Patented May 7, 1946 2,399,915

UNITED STATES PATENT OFFICE

2,399,915

EXERCISING APPARATUS

Ward A. Drake, Cleveland, Ohio

Application November 13, 1945, Serial No. 628,089

8 Claims. (Cl. 272—69)

The present invention relates to exercising apparatus, and particularly to novel improvements in treadmills or the like.

It is very important for people, both young and old, to keep physically fit. Every nation should have a reserve of vigorous and healthy men and women upon whom they can call to carry on the duties of peace and war. While the Army and the Navy in time of war may keep up reasonably strenuous training programs, there are thousands of people after they become settled in a so-called "white-collar" job, who become physically unfit from lack of proper exercise. Many of such people are hindered because they live in the city in apartments, and though on occasions after a tiring day at the office they may be able to arise early enough to walk downtown to the office the next morning, it is usually necessary to lose an extra hour or two of much needed early morning sleep. So, although a person may have good ambitions for keeping physically fit by walking to work for that much needed exercise, if business is particularly pressing requiring late hours such good ambitions soon fade away. Thus there is urgent need for an exercising device which will provide a most convenient arrangement for a reasonable amount of exercise at a time when the body is not too fatigued to absorb the full benefits thereof.

One of the most natural and beneficial forms of exercise for people in all age groups is walking. As pointed out above many people are unable to find time for this most natural form of all exercise. Accordingly, an object of the present invention is to provide an exercising apparatus, which may be conveniently stored in the bedroom or other suitable location within the house, whereby the user may derive the equivalent of a good walk of several miles each morning and evening right in his house or apartment before and after work.

For younger people, such as athletes training for track meets, football and basketball games and other strenuous sports, it is essential to go through reasonably strenuous training periods to build their physical endurance. Accordingly, another object is to provide a novel treadmill training and physical conditioning device, whereby athletes training for track, football, basketball and other strenuous sports may accurately test their endurance.

Another object is to provide an apparatus for hospitals or the like, whereby patients suffering from the results of infantile paralysis, long periods of illness and wounded war veterans may learn to walk again and regain their former confidence in their physical abilities.

Another object is to provide a treadmill exerciser which is cheap to manufacture, durable and economical to keep in good mechanical condition.

I attain the foregoing objects of the present invention by providing an attractively designed novel portable device, which broadly includes an endless belt adapted to be walked or run upon, and which as it is trod upon rotates around a pair of drums detachably and adjustably suspended in a novel supporting frame between the side walls of an enclosing ornamental casing, which casing is provided with indicating and measuring instruments and means responsive to the tread and pull of a person walking on the belt.

Other objects, advantages and uses of the present invention will appear more fully after reading the following detailed description together with reference to the accompanying drawings wherein one embodiment is shown. It is to be understood, however, that this embodiment is one example only of the apparatus and other arrangements and improvements which will now be apparent to others may be made without departing from the scope of the present invention.

In the drawings:

Figure 1 is a side elevational view of the apparatus.

Figure 2 is a longitudinal view taken along the line 2—2 of Fig. 1.

Figure 3 is a longitudinal view taken on the line 3—3 of Figure 1 and shows a jack attached to raise one end of the device.

Figure 4 is a view taken along the line 4—4 of Fig. 1.

Figure 5 is a partial perspective view of the top of a combination handle bar and brake for controlling the speed of the endless belt.

Figure 6 is a front view of the handle shown in Figure 5, and partly in section to show the brake operating connection.

Figure 7 is a pulled apart view of an arrangement for raising and lowering one end of the endless belt to provide an inclined surface for the exerciser to walk upon.

Figure 8 is a partial perspective of the lower extremity of the brake handle and brake per se with several attachments as hereinafter are described.

Referring to the several figures in detail and first with particular reference to Figure 1, there is shown a body 10 mounted on four caster wheels

11. The wheels 11 are preferably provided with rubber tires and are normally enclosed by housings, such as the hoods 15.

Within each hood is an inverted U-shaped wheel support or fork 18 with a transversely extending axle pin 17 on which a wheel 11 is journalled for rotation, see Fig. 7.

Secured to the rounded portion of each of the U-shaped wheel supports 18 is a vertical tube or hollow bar 19. This tube 19 has defined along its length a plurality of apertures 20 for the purpose hereinafter to be explained.

Around the tube 19 is a hollow elongated tube 26 having a cooperating alinable aperture 21. Tube 26 is secured by a coupling 22 to the top of each of the wheel hoods 15. The tubes extend upwardly with respect to the body 10 around the relatively longer tubes 19 and are arranged to telescope with respect to each other when the front end of the body 10 is elevated by any suitable means, such as the jack 27, see Fig. 3.

For example, as the end of body 10 is raised by the jack 27, which jack is attached to an outer surrounding frame 28 connected to each front wheel hood 15, it hoists this frame which carries with it the front hoods 15 and elevates them above the wheels 11.

Thus the wheels 11 remain in solid engagement with the floor or surface on which the apparatus may be, and the hoods 15 are raised with the tubes 26 from around the wheels 11 to any desired height and cotter pin 34 or the like may be inserted in aligned openings in tubes 19 and 26 to assist in holding the attached parts elevated.

The hoods 15 each have brackets, such as hooks 30 attached to their oppositely facing sides within the body 10. These hooks 30 serve to support and retain a novel frame arrangement 35, see Figures 2 and 3.

This frame 35, for example, may be made of pipe or rod sections welded and coupled together, so as to provide means, such as pairs of arms 36—37, 38—39, at each end. The ends of the arms are bent inwardly to provide stub axles 40—41, 42—43, and fixed to these axles are bearing members, comprising discs 49—50, and 51—52, each disc having inwardly projecting pins 54, 55 and 56, see Fig. 1. On these pins are journalled roller bearings 57, 58, and 59 arranged to engage within an annular collar 60 mounted on the ends of one of a pair of large barrel-shaped drums 61 around which an endless belt 63 is stretched.

One of these drums 61 is thus mounted on the bearings at each end of the novel frame 35, and around each drum is stretched the heavy endless belt 63, on which an exerciser or user of the apparatus is supposed to walk, as will be hereinafter more fully explained.

As the exerciser walks upon this belt 63, which as previously explained may be raised at one end by jack 27 to provide an inclined walking surface, traction is imparted to rotate the belt by his feet.

Obviously, the faster he walks the faster the belt 63 and the drums 61—61 will revolve. Accordingly, it is desirable that some means be provided to control the speed of the belt so as to provide a predetermined resistance to the traction set up by the exerciser's feet for the most practical and beneficial results. For this purpose there is a novel brake arrangement comprising a handle having side bars 65 and 66, extending angularly downward with respect to body 10 adjacent each side thereof and across and slightly below the frame 28 on each side back the front drum 61 to a medial point between the reaches of the belt 63. At each crossing point between the sides of the handle and the frame 28 are transverse pivot pins 70 and 71. Note that the side bars 65 and 66 of the handle are long enough so that the handle may be swung over to the front of the body 10 and thus serve as means to pull the unit around on its wheels 11.

Below the outer frame 28 and the novel frame 35 and pivots 70 and 70 there is joined to each lower end of side bars 65 and 66 a transverse brake bar 73, see Fig. 8. The brake bar 73 may be curved to conform to the adjacent surface of the barrel-shaped drum 61 between the reaches of the endless belt 63 and carries a brake shoe 75. The sides 65 and 66 of the brake lever extend above the top of body 10 and are joined together by a transverse handle bar 76, see Figs. 1, 5 and 6.

The handle bar 76 is intended to be gripped by the exerciser and the brake 75 may be pulled into engagement with the front drum 61 for any braking pressure desired. A pawl and ratchet arrangement may be provided for holding the brake to various adjusted "on" positions. As shown, for example, there is a curved rack with teeth 77 mounted on the top side of the surrounding tubular frame 28 coupled in the wheel hood 15.

Slidably mounted in a sleeve 78 mounted on bar 65 of the brake handle is a dog 79 adapted to snap between the rackteeth 77 as the handle bar is pulled by the exerciser to lock the brake into various brake applying positions, so as to set the belt for any desired degree of resistance to traction.

To release automatically the engageable dog 79 there is provided an operating rod 80 connected to one arm of a small bell crank lever 81. The other arm 83 of the bell crank lever is connected by a flexible cable 84 to a bolt 85, see Fig. 6. This bolt comprises a flange 86 against which is seated one end of a coiled spring 87 with the other end of the coil being supported by a washer 88 through which the bolt 85 slides.

The bolt 85 has defined thereon a key member 89 that cooperates with a key hole in the washer 88. The bolt 85 is normally held down by the eccentric end 90 of the transverse handle bar 76, so as to maintain the coiled spring compressed and the dog 79 locked between the rack teeth 77. When the handle bar is turned in its socket mountings on each end of the sides 65 and 66, the eccentric 90 is so arranged as to permit release of the dog by the spring 87, which expands against the flange 86 of the bolt 85 and rocks the bell crank about its pivot so as to pull upward on the dog 79, release rod 80 and raise dog 79 from between teeth 77.

With further reference to the novel frame 35 for supporting the endless belt and the drums 61, it is important to arrange for varying the tension of the belt, and provide for removing the drums to replace worn out belts. Accordingly, each set of arms 36—37 and 38—39 of the frame 35 are joined by transverse bars 92 and 93, and these bars are adjustable by inserted interconnecting threaded sections, see Fig. 2, such as couplings 94 or the like.

These transverse pipe rod connections join with a centrally disposed parted pipe section 99. This section likewise has an interposed left and right-hand threaded insert with a hexagonal nut fixed thereto to lengthen and shorten the distance between the transverse bars 92—93.

These inserts comprise an inserted pipe section

95 with right and left-hand threads 96 and 97 on each end and an interposed hexagonal adjusting nut 98. Lengthening of the distance between the transverse bars 92—93 by turning the hexagonal nut 98 increases the belt tension while shortening the section will decrease the tension of the belt.

The belt 63 if desired may have under it a platform 110. This platform comprises a frame having side bars 111 and 112 between which are journalled rollers 114 on shafts 115. Each end roller has a shaft 116 extended over the outer frame 28 on each side to shock absorber device 118, which is arranged to provide a yieldable support for the roller platform 110 under the upper reach of the belt 63. As the specific form of the shock absorber 118 is not the subject of this application no detailed description of the same is considered necessary other than that it comprises a bracket with a bolt 119 having fixed washer 120 on which rests a coiled spring 121, which carries a movable washer 122 adapted to yield to pressure of the extended shafts 116 of the end rollers.

The platform 110 is optional as the belt 63 on the top tread surface is convex due to the barrel-shape of the drums 61 which is usually sufficient to provide the proper resistance to the weight of a person walking on the belt.

Sometimes it may be desirable to drive the belt 61 by power means, such as an electric motor 125. The motor, for example, may be mounted from a bracket 126 on the frame 35, and it has a drive shaft on which is keyed a rubber surfaced roller 129, see Fig. 4. The roller 129 frictionally engages with the belt 63, which belt is held in proper frictional engagement by a supporting shoe or block 130 carried by a C-shaped arm 132 secured to the motor housing by suitable means, such as bolts 134.

A suitable source of electric power for the motor from an electric outlet plug 136 and a main conductor 137 to the motor is provided with a branch conductor 138 leading to a rheostat switch 140 mounted on side rod 19.

The motor 125 may thus be regulated conveniently by the rheostat for several speeds, as desired.

Provision is made for measuring the pull of a person walking on the belt, by using shoulder straps 145, suspended from cables 146 leading from uprights 148. These straps join the cables 146, which are threaded through the bores of the hollow upright bars 19, 26, frame 28, hollow bars 19 to an instrument 150 mounted in a panel board 152 across the top front of the body 10.

Also mounted in the panel board 152 is a pedometer 155 connected by a flexible drive cable 156 to a wheel 157, see Fig. 1. The wheel 157 is in engagement with belt 63 and is rotated by the belt to measure distance and speed of the belt rotation. Of course distance is relative to the time that the person walks on the belt.

Many other accessories may be provided, such as the rear steps 160, with a weighing scale 161 mounted in the top step thereof, and an electric light 162 to illuminate the scale dial and the steps.

The use and operation of the apparatus should be apparent from the foregoing description, however, the use of the apparatus will now be briefly summarized.

An exerciser walks up the steps weighs himself on the scale 161, grips the handles 164 and steps onto the belt 63. He then grasps the handle 76 and pulls it toward him. As he does this the dog 79 latches between the teeth 77 to any of the several adjusted positions.

The first position of the handle may be an "off" brake position, until he has walked on the belt 63 long enough to get a desired speed of belt rotation, assuming he is not to use the drive motor 125. After he is on the belt the shoulder straps 145 may be applied and as a desired speed is attained the brake may be adjusted to any degree of "on" position desired.

As resistance to his walking is increased there will be imparted from the shoulder straps 145 and cables 146 a movement of the indicator 150 corresponding to the pull on the straps. This pull increases as the brake 75 is applied.

A still greater pull may be caused on the shoulder straps by raising the front end of the apparatus by the jack 27 to provide a hill or incline to walk upon. Thus the machine is arranged to provide for progressively greater exertion, so as to gradually build a person's body and leg strength.

Also, as the apparatus is used the panel board is in easy view and the exerciser may observe his degree of pull on the indicator 150 and his approximate speed and mileage on the indicator 155.

Whenever the manual operation is found too violent, when a patient is beginning to first use the apparatus, then the power means or motor 125 is used to drive the belt and the patient is only required to keep up a steady stride in accordance with the speed of the belt rotation.

Thus I have provided an exercising apparatus which is simple in operation and construction. This apparatus is particularly designed for hospitals, gymnasiums, and private residences for the development of the body muscles and for teaching paralysis victims and patients from other causes how to walk again after a long illness or the like.

While I have shown and described only one embodiment of my invention, it is to be understood that various changes now likely to occur to others in design and construction may be made without departing from the scope of the present invention; and reference should be had to the appended claims to determine the scope of my invention.

What is claimed is:

1. An exercising apparatus comprising a body adapted to enclose a frame, said frame having adjustable sections at each end, said sections comprising arms with inturned ends, drums journalled on said ends and supported thereby for rotation between the arms, a flexible endless belt around said drums, and means adapted to regulate the rotation of said endless belt.

2. An exercising apparatus comprising a body adapted to enclose a frame, said frame having adjustable sections at each end, said sections comprising arms with inturned ends, drums journalled on said ends and supported thereby for rotation between the arms, a flexible endless belt around said drums, and a brake adapted to regulate the speed of rotation of said belt.

3. An exercising apparatus comprising a body adapted to enclose a frame, said frame having adjustable sections at each end, said sections comprising arms at each end, drums journalled for rotation between the arms, a flexible endless belt around said drums, a friction brake adapted to regulate the speed of rotation of said belt, and brake operating means adapted to latch the brake to different "on" positions.

4. In an exercising device, the combination

of a body, an outer hollow frame around said body, ground engaging wheels for supporting said body, vertically movable hoods normally adapted to enclose the upper part of each ground wheel, coupling means for joining said hoods to said outer frame, second hollow coupling means vertically extending from the top of said hoods, a wheel fork within each hood adapted to rotatably mount said ground wheels, a hollow rod coupled to the top of said wheel forks in each hood extending vertically upward through said hollow coupling adjacent the sides of said body, a second hollow rod telescopically arranged around said first hollow rod coupled to the top of each hood by said first coupling means, a bracket secured to said hoods extending toward each side of the body portion, an inner frame supported by said brackets, said frame being adapted to rotatably mount a drum at each end of the body, an endless flexible belt around said drums adapted to support the weight of a person walking thereon, hoist means attached to the front of said outer frame adapted to raise the front end of said belt to provide an inclined walking surface, and means adapted to secure said telescoping hollow bars to any position to which the front of said body is hoisted.

5. An exercising device including a wheel supported body, a frame secured to said body and encompassing the exterior thereof, a second removably mounted frame suspended between the wheels within the body, said frame comprising pairs of arms at each end, cross members connecting said arms together, a longitudinally extending member connected to said cross members, and a drum rotatably mounted between each pair of arms at each end of the said second frame for mounting an endless belt.

6. An exercising device including a wheel supported body, a frame secured to said body and encompassing the exterior thereof, a second removably mounted frame suspended between the wheels within the body, said frame comprising pairs of arms at each end, cross members connecting said arms together, a longitudinally extending member connected to said cross members, a drum rotatably mounted between each pair of arms at each end of the said second frame for mounting an endless belt, and means interposed in the length of said cross members and said longitudinal member adapted to adjust the lengths of the respective members, whereby the drums may be readily mounted and demounted and the tension of said endless belt may be regulated.

7. In an exercising device, the combination of a body, an outer hollow frame around said body, ground engaging wheels for supporting said body, vertically movable hoods normally adapted to enclose the upper part of each ground wheel, coupling means for joining said hoods to said outer frame, second hollow coupling means vertically extending from the top of said hoods, a wheel fork within each hood adapted to rotatably mount said ground wheels, a hollow rod coupled to the top of said wheel forks in each hood extending vertically upward through said hollow coupling adjacent the sides of said body, a second hollow rod telescopically arranged around said first hollow rod coupled to the top of each hood by said first coupling means, a bracket secured to said hoods extending toward each side of the body portion, an inner frame supported by said brackets, said frame being adapted to rotatably mount a drum at each end of the body, an endless flexible belt around said drums adapted to support the weight of a person walking thereon, hoist means attached to the front of said outer frame adapted to raise the front end of said belt to provide an inclined walking surface, means adapted to secure said telescoping hollow bars to any position to which the front of said body is hoisted, a panel board across the top front of said body having measuring instruments mounted therein, a pair of hollow uprights at the rear of said body joining with the hollow bores of said outer frame, cable means strung through the said frame on each side connected to one of said measuring instruments and having free ends protruding from the ends of said hollow upright, and harness means attached to the free ends of said cable means adapted to be placed around the shoulders of a user of the device as he trods on the endless belt.

8. An exercising apparatus comprising a body adapted to enclose a frame, said frame having adjustable sections at each end, said sections comprising spaced arms, members carried by said arms, drums rotatably mounted on said members, a flexible endless belt around said drums, an electric motor with a housing having a rotor shaft extending from it, said motor being supported on said frame, a friction wheel secured to the extended end of said rotor shaft, a curved bracket secured to the motor housing having a flat shoe on its free end under a portion of the belt adapted to hold said belt in driving contact with said friction wheel, and a rheostat switch adapted to vary the supply of current to said motor to produce different speeds of rotation of the rotor mounted friction wheel, to thereby drive the endless belt at different selected speeds.

WARD A. DRAKE.