PCT WORLD INTELLECTUAL PROPERTY ORGANIZATION
International Bureau

INTERNATIONAL APPLICATION PUBLISHED UNDER THE PATENT COOPERATION TREATY (PCT)

(51) International Patent Classification 6 : G08B 13/18, H04N 5/232	A1	(11) International Publication Number: WO 95/06303
		(43) International Publication Date: 2 March 1995 (02.03.95)

(21) International Application Number: PCT/AU94/00501

(22) International Filing Date: 25 August 1994 (25.08.94)

(30) Priority Data:
PM 0812 25 August 1993 (25.08.93) AU

(71) Applicant *(for all designated States except US)*: THE AUSTRALIAN NATIONAL UNIVERSITY [AU/AU]; Acton, ACT 2601 (AU).

(72) Inventors; and
(75) Inventors/Applicants *(for US only)*: CHAHL, Javaan, Singh [AU/AU]; 2 Prendergast Street, Curtin, ACT 2605 (AU). NAGLE, Martin, Gerard [AU/AU]; 21 Vidal Street, Richardson, ACT 2905 (AU). SRINIVASAN, Mandyam, Veerambudi [AU/AU]; 36 Challinor Crescent, Florey, ACT 2615 (AU). SOBEY, Peter, John [AU/AU]; 7 Palana Place, Giralang, ACT 2617 (AU).

(74) Agents: DUNCAN, Alan, David et al.; Davies Collison Cave, 1 Little Collins Street, Melbourne, VIC 3000 (AU).

(81) Designated States: AU, JP, US, European patent (AT, BE, CH, DE, DK, ES, FR, GB, GR, IE, IT, LU, MC, NL, PT, SE).

Published
With international search report.

(54) Title: PANORAMIC SURVEILLANCE SYSTEM

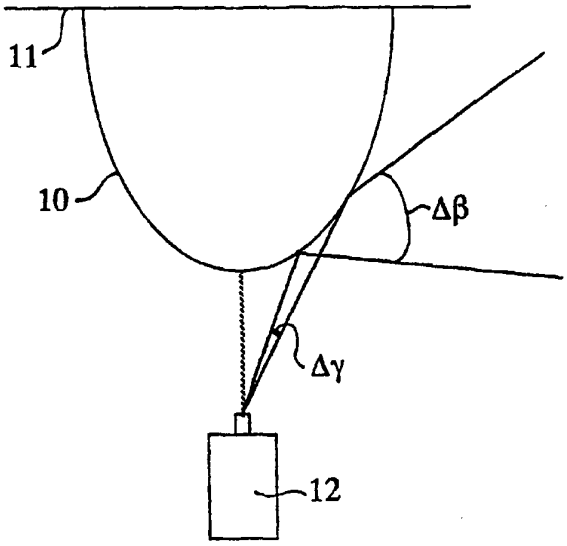

(57) Abstract

A surveillance system, for monitoring a space, comprises a single camera (12) and a dome-like, convex mirror (10). The camera (12) is mounted relative to the mirror (10) so that at least most of the surface of the mirror is within the field of view of the camera. The mirror (10) has a profile which ensures that radiation from at least most of the space is reflected by the dome-like mirror onto the image plane of the camera. Preferably the dome-like mirror is circularly symmetrical, with its axis of symmetry aligned with the optical axis of the camera. Usually, the camera will be an electronic camera having a charge couple device (CCD) sensor at its image plane, and the processed image of the space produced by the camera will be displayed on a monitor screen as either a warped image or a de-warped image. A motion sensing algorithm may be included in the image processing system of the electronic camera to generate an alarm when motion is sensed in any predetermined region of the space.

FOR THE PURPOSES OF INFORMATION ONLY

Codes used to identify States party to the PCT on the front pages of pamphlets publishing international applications under the PCT.

AT	Austria	**GB**	United Kingdom	**MR**	Mauritania
AU	Australia	**GE**	Georgia	**MW**	Malawi
BB	Barbados	**GN**	Guinea	**NE**	Niger
BE	Belgium	**GR**	Greece	**NL**	Netherlands
BF	Burkina Faso	**HU**	Hungary	**NO**	Norway
BG	Bulgaria	**IE**	Ireland	**NZ**	New Zealand
BJ	Benin	**IT**	Italy	**PL**	Poland
BR	Brazil	**JP**	Japan	**PT**	Portugal
BY	Belarus	**KE**	Kenya	**RO**	Romania
CA	Canada	**KG**	Kyrgystan	**RU**	Russian Federation
CF	Central African Republic	**KP**	Democratic People's Republic of Korea	**SD**	Sudan
CG	Congo			**SE**	Sweden
CH	Switzerland	**KR**	Republic of Korea	**SI**	Slovenia
CI	Côte d'Ivoire	**KZ**	Kazakhstan	**SK**	Slovakia
CM	Cameroon	**LI**	Liechtenstein	**SN**	Senegal
CN	China	**LK**	Sri Lanka	**TD**	Chad
CS	Czechoslovakia	**LU**	Luxembourg	**TG**	Togo
CZ	Czech Republic	**LV**	Latvia	**TJ**	Tajikistan
DE	Germany	**MC**	Monaco	**TT**	Trinidad and Tobago
DK	Denmark	**MD**	Republic of Moldova	**UA**	Ukraine
ES	Spain	**MG**	Madagascar	**US**	United States of America
FI	Finland	**ML**	Mali	**UZ**	Uzbekistan
FR	France	**MN**	Mongolia	**VN**	Viet Nam
GA	Gabon				

Title: **"PANORAMIC SURVEILLANCE SYSTEM"**

Technical field

This invention concerns surveillance systems. More particularly, it concerns systems for the panoramic surveillance of a space using a single, stationary, camera.

Background to the invention

With recent increases in the occurrence of the crimes of theft and armed robbery, it has become commonplace to install a system for the surveillance of supermarkets, shop checkout areas, banks and other spaces. Conventional surveillance systems use either multiple video cameras (each monitoring a zone of the space) or a single, mechanically scanned camera. The former of these systems requires the observer to check several image displays to monitor the entire field of view. The latter type of system displays only a narrow field of view at any instant, which reduces the value of the system as a surveillance tool.

Both of these conventional surveillance systems are quite expensive, requiring either multiple cameras and monitors or a mechanical drive for scanning the camera. Systems employing moving cameras consume more power and require more maintenance. A further disadvantage of the moving camera system is that any motion of an object that is within the image is difficult to detect from simple observation of a monitor screen, due to the apparent continual full-field image motion that is induced by the movement of the camera.

Disclosure of the present invention

It is an object of the present invention to produce a surveillance system which utilises a single camera, which requires no movement of that camera, and yet which has a panoramic field of view that can be displayed on a single monitor screen.

This objective is achieved using a suitable camera (an electronic camera - either a "still" camera or a video camera - having a charge coupled device (CCD) sensor at its image plane, being particularly suitable) and a dome-like convex mirror. Typically the dome-like convex mirror is mounted on the ceiling of a room to be monitored (though the mirror may be mounted in other locations whenever it is more appropriate to do so in view of the nature of the surveillance to be performed). The camera is mounted relative to the mirror in such a manner that a major part (if not all) of the curved surface of the mirror is within the field of view of the camera. The mirror has a profile such that it projects most - preferably all - of the environment in which the mirror is mounted onto the imaging plane of the camera.

Thus, according to the present invention there is provided a surveillance system for a space, said system comprising (i) a camera and (ii) a mirror, said system being characterised in that:

(a) the mirror is a dome-like convex mirror, having a generally smoothly curved surface;

(b) the camera is mounted relative to the mirror so that at least a major portion of the surface of the mirror is within the field of view of the camera; and

(c) the mirror has a profile such that the mirror projects radiation from at least a major part of said space onto the imaging plane of the camera.

Except when special surveillance requirements dictate the use of a mirror of a different type, the dome-like mirror will be a circularly-symmetrical mirror, with no sharp discontinuities of the profile, and the optical axis of the camera's field view (the optical axis of the camera) will be aligned with the axis of symmetry of the mirror profile.

Preferably an electronic camera having a charge coupled device (CCD) sensor at its imaging plane is used in implementations of the present invention. Such a camera (which may be a video camera or a "still" camera which produces an image in a fairly long time, of up to one minute) will produce a warped image of the space being observed, which may be displayed directly on a monitor screen. Alternatively, the signal processing of the output of the camera sensor may be modified so that the image co-ordinates are changed and a de-warped image is displayed on the monitor screen. If movement detecting software is included as part of the signal processing package, any movement within the region being monitored will be detected and the attention of an observer drawn to it (for example, by displaying the image of the zone where movement is occurring in a colour which contrasts with the colour of the remainder of the image, and preferably also by generation of an audio tone).

The significance of these and other, optional features of the present invention will become more apparent from the following description of embodiments of the invention, which is provided by way of example only. In the following description, reference will be made to the accompanying drawings.

Brief description of the accompanying drawings

Figure 1 shows one mirror and camera configuration that may be used in implementations of the present invention.

Figure 2 illustrates the polar and cartesian co-ordinate systems used in this specification when defining the profile of a mirror.

Figure 3 contains the profiles of mirrors having elevation gains (defined below) of 1, 3, 5 and 7, when the mirror and camera configuration shown in Figure 1 is adopted.

Figure 4 shows a compact form of the mirror and camera configuration, which utilises a supplementary mirror to establish the required panoramic surveillance.

Figure 5 is the monitor screen image of a square room, 2.5 metres high and with each wall 5 metres long, obtained using the mirror and camera configuration that is shown in Figure 1.

Figure 6 is the monitor screen image that is obtained when the image of Figure 5 is de-warped.

Detailed description of the illustrated embodiments

In the arrangement shown in Figure 1, a dome-like convex mirror 10, which has a circularly-symmetrical surface, is attached to the ceiling 11 of a room that is the subject of surveillance. This is expected to be the most usual way in which the surveillance system will be used but, as noted above, this invention may be used in a variety of monitoring situations, including situations where it would be inappropriate - or impossible - to mount a dome-like convex mirror on a ceiling, a high beam or a high platform. The profile of the mirror 10 may be any one of a large number of practical profiles, several of which are described in more detail below. The mirror profile will be selected according to the magnification requirements of the surveillance system.

A camera 12 is mounted directly below the mirror 10, facing upwards. That is, the camera is mounted with the axis of its field of view collinear with the axis of symmetry of the mirror profile. With this arrangement, the mirror 10 will project radiation from a large portion of the room underneath the ceiling 11 onto a circular region of the sensor at the image plane of the camera 12. Thus the image produced by the camera (a typical image being shown in Figure 5 of the accompanying drawings) represents 360° of the monitored environment in azimuth and from -90° (that is, vertically downwards in the arrangement shown in Figure 1) to positive values (that is, to above the horizontal) in elevation. In practice, the lowest elevation is determined by the size of the camera and its mount, which blocks the view directly

downwards from the central point of the mirror 10, and the highest elevation is determined by the axial length of the mirror and the shape of its profile.

In the circular image that is generated by the mirror 10, a given radial direction corresponds to a specific azimuth in the environment, and increasing radii correspond to increasing elevations. The profile of the mirror is preferably chosen to map equal changes of elevation on to equal changes of radius in the image. The elevation gain α is defined as the increase of the angle of elevation ($\Delta\beta$) per unit increase in the angle of divergence from the optical axis of the corresponding ray ($\Delta\gamma$) entering the camera through the nodal point, as illustrated in Figure 1.

The profile of the circularly symmetrical mirror 10 can be defined in polar or cartesian co-ordinates, according to any selected co-ordinate system. In this specification, the polar co-ordinates (r,θ) and the corresponding cartesian co-ordinates (x,y) for the mirror are those shown in Figure 2, where the point $(0,0)$ in each system corresponds to the point where the aperture lens of the video camera 12 is positioned.

The profile of the mirror 10 can be adjusted to obtain any desired value of elevation gain that is greater than unity. It can be shown that for any elevation gain α, the requisite profile in polar co-ordinates must satisfy the equation:

$$Sin[A+0.5(1+\alpha)\theta]=C.r.[-0.5(1+\alpha)]$$

where the origin is at the nodal point (the aperture lens of the camera), r is the distance to the mirror profile from the origin along a direction inclined at an angle θ with respect to the optical axis of the camera (see Figure 2); C is a constant whose value depends upon the nearest distance of the profile to the nodal point, and A specifies the inclination of the profile to the optical axis of the camera at the point on the profile which is nearest.

Examples of mirror profiles for a few selected values of elevation gains are given below. In each of these Examples it has been assumed that $A=90°$ (that is, that the surface of the mirror is normal to the optical axis of the camera where the axis of the camera intersects the mirror 10).

Example 1: Elevation gain = 1

Although a mirror having an elevation gain of unity would not be used in the present invention, this example is included for the sake of completeness of this description. The polar equation specifying the profile of the mirror is

$$r=\frac{r_o}{\cos\theta}$$

where r_o is the shortest distance between the profile and the nodal point. In cartesian co-ordinates, the

corresponding equation (with reference to the same origin) is

$$x=r_o, \forall y$$

where x denotes axial distance and y denotes radial distance, as illustrated in Figure 3. These equations define a plane mirror with its plane normal to the optical axis of the camera, at a distance r_o from the camera's nodal point. (Values of A other than 90° yield cones of semi-vertical angle A.)

Example 2: Elevation gain = 3

The polar equation specifying the profile of a mirror having an elevation gain of 3 is

$$r^2=\frac{r_o^2}{\cos 2\theta}$$

where r_o is the distance between the tip of the profile and the nodal point. In cartesian co-ordinates, the corresponding equation (with reference to the same origin) is

$$x^2-y^2=r_o^2$$

where x denotes axial distance and y denotes radial distance, as illustrated in Figure 3. This mirror profile is a rectangular hyperbola, whose profile asymptotically approaches that of a 90° cone as x and y approach infinity.

Example 3: Elevation gain = 5

The polar equation specifying the profile of a mirror having an elevation gain of 5 is

$$r^3=\frac{r_o^3}{\cos 3\theta}$$

where r_o is the distance between the tip of the profile and the nodal point. In cartesian co-ordinates, the corresponding equation (with reference to the same origin) is

$$x(x^2-3y^2)=r_o^3$$

where x denotes axial distance and y denotes radial distance, as illustrated in Figure 3.

Example 4: Elevation gain = 7

The polar equation specifying the profile of a mirror having an elevation gain of 7 is

$$r^4=\frac{r_o^4}{\cos 4\theta}$$

where r_o is the distance between the tip of the mirror profile and the nodal point. In cartesian co-ordinates, the corresponding equation (with reference to the same origin) is

$$(x^2+y^2)^2-8x^2y^2=r_o^4$$

where x denotes axial distance and y denotes radial distance as illustrated in Figure 3.

It should be noted that in each of the examples given above, it has been assumed that $A=90°$. If A should have a value other than 90°, a sharp point would be present at the tip of the mirror, rather than a flat surface. Such profiles (which are intended to be included within the scope of the term "dome-like" whenever this term is used in this specification) would be useful in excluding the image of the camera in the mirror, and would allow the best use to be made of the camera's imaging surface in capturing the environment.

It is also within the scope of this invention to use a dome-like mirror which has a composite mirror profile, which produces different gains at different elevations and thus serves to magnify certain elevation bands at the expense of other elevations.

As mentioned above, the circular image produced on a monitor screen by conventional processing of the output signals of a still camera (or a video camera) having a charge coupled device (CCD) sensor at its image plane, when the arrangement shown in Figure 1 is used, is usually a warped version of the monitored environment, in which the azimuth corresponds to the environmental azimuth and the radial distance corresponds to the elevation angle. An example of this warped image is shown in Figure 5, which is the image obtained with a video camera, using the arrangement of Figure 1, of a square room in which each wall has a length of 5 metres, and the floor-to-ceiling height is 2.5 metres.

To assist the interpretation of this image, it may be de-warped using modified image signal processing (with a suitably programmed computer or microprocessor) to convert it into a system of cartesian co-ordinates, $\hat{x},\hat{y}$, where the transformation between the warped image, defined on the cartesian co-ordinates (x,y), and the de-warped image, defined on the cartesian co-ordinates $(\hat{x},\hat{y})$ is defined by

$$x=k.\hat{y}.\cos(\hat{x})$$

$$y=k.\hat{y}.\sin(\hat{x}).$$

Thus, the intensities at each pixel location $(\hat{x},\hat{y})$ in the de-warped image can be obtained by reading off the corresponding intensities at locations (x,y) in the warped image, as specified by the above transformation. Since each $(\hat{x},\hat{y})$ pixel location in the de-warped image may not necessarily correspond to the centre of an (x,y) pixel location in the warped image, an interpolation procedure is necessary to compute the intensity at the appropriate location in the warped image. The conversion algorithm, therefore, implements the transformation as well as the interpolation.

The image processing algorithm for effecting the de-warping of the image may be any one of a number of known algorithms for effecting the required transformation, but skilled programmers will be able to generate their own algorithm or algorithms for this purpose.

A de-warped version of the image of Figure 5 is shown in Figure 6.

In some situations, it is impractical or undesirable to mount a camera beneath a dome-like mirror, as shown in Figure 1. In such a situation, the compact arrangement shown in Figure 4 may be adopted.

In the arrangement shown in Figure 4, the camera 12 is mounted within the shell of a hollow dome-like mirror 10 that is attached to the ceiling 11 (or other suitable structure) which forms one of the boundaries of the space to be monitored. A small opening at the lowermost point 14 of the mirror 10 permits the CCD sensor of the camera to receive radiation from a solid angle θ. A small, supplementary mirror 13 is mounted directly below the opening 14, with the reflecting surface of the mirror 13 uppermost. Radiation from the environment being monitored is directed by the dome-like mirror 10 onto the supplementary mirror 13, which reflects it through the opening 14 and onto the CCS sensor of the camera 12.

Not only does the arrangement illustrated in Figure 4 reduce the physical size of the surveillance equipment, but the blind spot below the central (lowermost) point or tip of the mirror 10 is also reduced. The elevation gain of the two-mirrors combination shown in Figure 4 is distributed between the mirrors 10 and 13.

When an electronic camera having a CCD sensor is used in an implementation of the present invention, the digital

image processing of the output signals of the video camera enables automatic motion sensing to be used with the surveillance system. With such an arrangement, motion within any part of the monitored space is sensed automatically, and an appropriate alarm is generated. As noted above, this alarm may comprise colour-coding of the region in the image which corresponds to the azimuth and elevation where motion has been sensed, and/or the generation of an audio alarm signal. This is a valuable optional feature because human observers tend to suffer from lapses of concentration when required to attend to visual tasks for extended periods. As a result, the very event that the surveillance system is designed to detect could be overlooked. The generation of a suitable alarm signal means that the surveillance system can be used effectively without the constant supervision of an operator.

The resolution of the image seen by an operator of the surveillance equipment is dictated by the quality of the imaging used in the camera of the installation. Due to the design of the reflective surfaces, resolution on the vertical axis on the user's display (elevation) is constant across the image, (that is, half of the number of lines on the CCD - the radius of the surface projected onto the cameras - represents the full range of elevation).

The de-warping process - if used - causes resolution in azimuth to be directly dependant on elevation. This is not apparent to the operator because low elevation pixels in the de-warped image are stretched to ensure that the user display is rectangular. This property may at first appear to be a major drawback of the system. However, it will be apparent that nearby objects are also those at low angles of elevation (they will be under the camera). Thus, despite the fact that near objects will be sampled by fewer pixels per degree, the near objects also subtend a greater number of degrees. In this situation, objects at longer distances will be represented in the de-warped image by a similar number of pixels to those which represent objects which are close to the camera.

Industrial Applicability

The surveillance system of the present invention has applications in a wide number of security related areas, including banks, museums, art galleries, hotels and casinos, interview rooms in police stations, government departments, shops and shopping centres, customs, security apartments and carparks. The surveillance system is also very well suited to tasks which require the detection and signalling of movement in designated areas of a room, but not in other areas, such as the region around an *objet d'art* in an art gallery. It can also be used on gantries as a collision warning device. Another potential application is in the area of time, space and motion studies of a factory floor or a supermarket. Thus, the system of the present invention is not restricted to surveillance tasks, but is

applicable more generally to tasks which require panoramic monitoring of a large area. The present invention can also be extended to measure the ranges of objects within the panoramic field of view. In this way it can be used as a surveying instrument to map the topography of the surrounding environment.

By way of summary, a brief (and not exhaustive) list of potential applications of the present invention is as follows:

- security surveillance systems (as noted above);
- traffic monitoring and control, especially at major road intersections;
- airport surveillance: panoramic monitoring of an airfield from a control tower;
- in aircraft underbellies, to enable pilots to view "blind" regions beneath the passenger compartment of an aircraft;
- in ships and aircraft carriers, mounted on a mast to provide a panoramic view of decks;
- as a panoramic periscope in submarines and elsewhere;
- as a "seeing eye" that can be mounted on a cargo container to warn of potential obstacles when the container is being moved by a crane;
- remote monitoring of industrial processes;
- monitoring of activity on workshop floors in conjunction with time and motion studies; and
- coastline surveillance.

It will be apparent from this list that although specific embodiments of the present invention are illustrated and described in this specification, modifications of those embodiments may be made without departing from the present inventive concept.

CLAIMS

1. A surveillance system for a space, said system comprising (i) a camera and (ii) a mirror, said system being characterised in that:
   (a) said mirror is a dome-like convex mirror, having a generally smoothly curved surface;
   (b) said camera is mounted relative to said mirror so that a least a major portion of the surface of the mirror is within the field of view of the camera; and
   (c) said mirror has a profile such that the mirror reflects radiation from at least a major part of said space onto the image plane of the camera.

2. A surveillance system as defined in claim 1, in which said dome-like mirror is a circularly symmetrical mirror.

3. A surveillance system as defined in claim 2, in which axis of symmetry of said dome-like mirror is aligned with the optical axis of said camera.

4. A surveillance system as defined in claim 3, in which said space is a volume, said dome-like mirror is mounted at or near the top of said volume, and said camera is mounted directly below said mirror.

5. A surveillance system as defined in claim 3, in which:

(a) said dome-like mirror is formed as a hollow shell with an opening therein at the axis of symmetry of said dome-like mirror;

(b) said camera is mounted within said shell; and

(c) a supplementary mirror is mounted outside said shell on the axis of symmetry of said dome-like mirror, with the reflective surface of said supplementary mirror facing said dome-like mirror;

whereby (i) radiation incident upon said dome-like mirror from at least a major part of said space is reflected by said dome-like mirror onto the reflective surface of said supplementary mirror which, in turn, reflects said radiation through said opening and onto the image plane of said camera; and (ii) the aperture lens of said camera has a virtual position outside said shell, said virtual position being a distance from said opening which is a function of (1) the distance between the reflective surface of said supplementary mirror and said aperture lens, (2) the reflective characteristics of said dome-like mirror and said supplementary mirror, and (3) the distance between said opening and the reflective surface of said supplementary mirror.

6. A surveillance system as defined in claim 5, in which said space is a volume and said dome-like mirror is mounted at or near the top of said volume with said aperture at the lowermost point of said dome-like mirror.

7. A surveillance system as defined in claim 4 or claim 6, in which said volume is a room with a ceiling and said dome-like mirror is mounted on said ceiling.

8. A surveillance system as defined in any preceding claim, in which said dome-like mirror has an elevation gain, α, which is greater than 1, and the profile of said dome-like mirror satisfies the relationship, in polar co-ordinates,

$$Sin[A+0.5(1+\alpha)\theta]=C.r.[-0.5(1+\alpha)]$$

where the origin of the co-ordinates is at the actual or virtual position of the aperture lens of said camera, r is the distance of a point on the mirror profile from the origin along a direction inclined at an angle θ with respect to the optical axis of the camera, C is a constant, and A specifies the inclination of the profile to the optical axis of the camera at the point on said dome-like mirror which is closest to the aperture lens of the camera.

9. A surveillance system as defined in any preceding claim, in which said camera is an electronic camera having a charge coupled device (CCD) sensor at its image plane, and the output of said sensor is connected to signal processing means which produces an image of said space on a monitor screen.

10. A surveillance system as defined in claim 9, in which said image on the monitor screen is a warped image of said space.

11. A surveillance system as defined in claim 9, in which said signal processing means is programmed to produce a de-warped image of said space on said monitor screen.

12. A surveillance system as defined in claim 9, claim 10 or claim 11, in which said signal processing means includes a motion sensing algorithm which is adapted to sense motion within said space and to provide an indication of the occurrence of said motion.

13. A surveillance system as defined in claim 12, in which said indication comprises the display of the region in said space within which motion has been sensed on said monitor screen in a colour which is different from the normal colour or colours used for said image on said monitor screen.

14. A surveillance system as defined in claim 12, in which said indication comprises the generation of an audio tone.

15. A surveillance system as defined in any one of claims 9 to 14, in which said camera is a video camera.

16. A surveillance system as defined in claim 1, substantially as hereinbefore described with reference to the accompanying drawings.

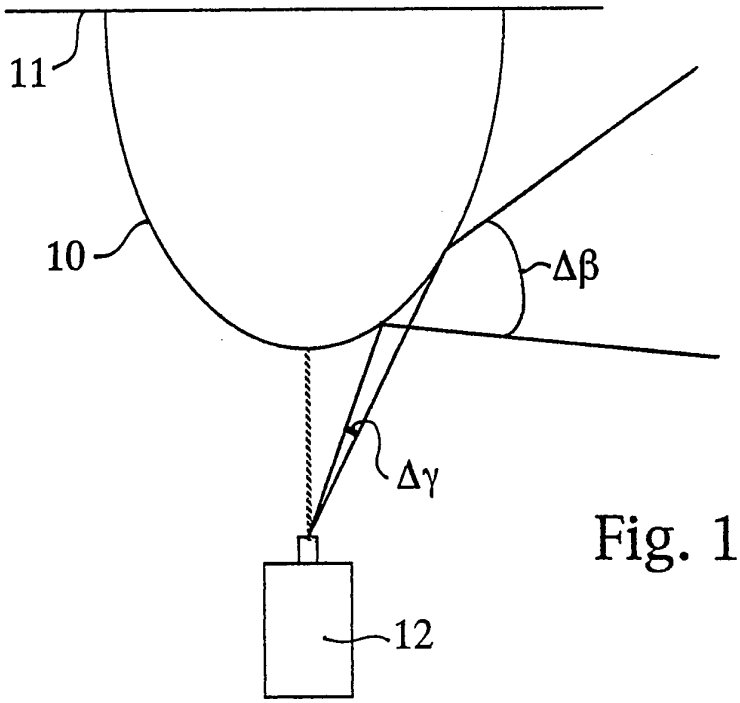

Fig. 1

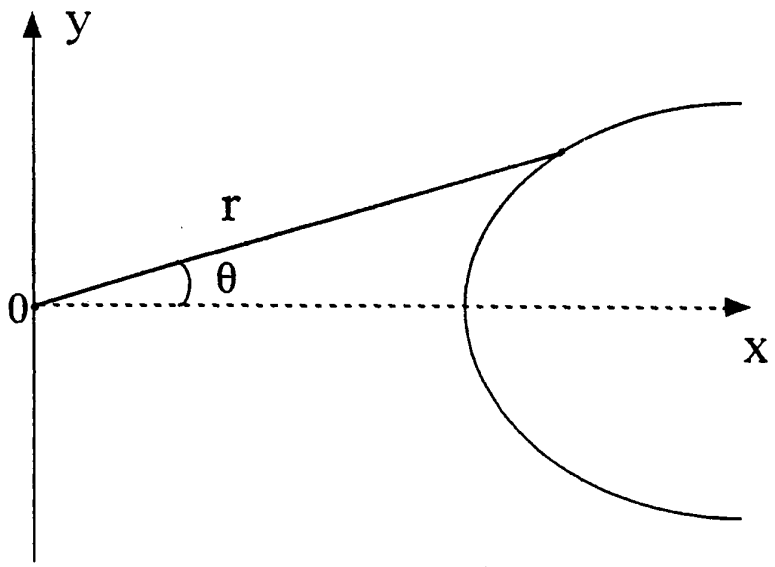

Fig. 2

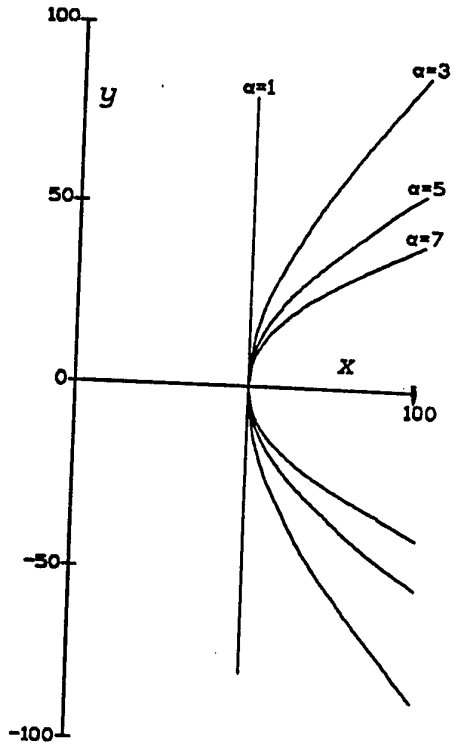

Fig. 3

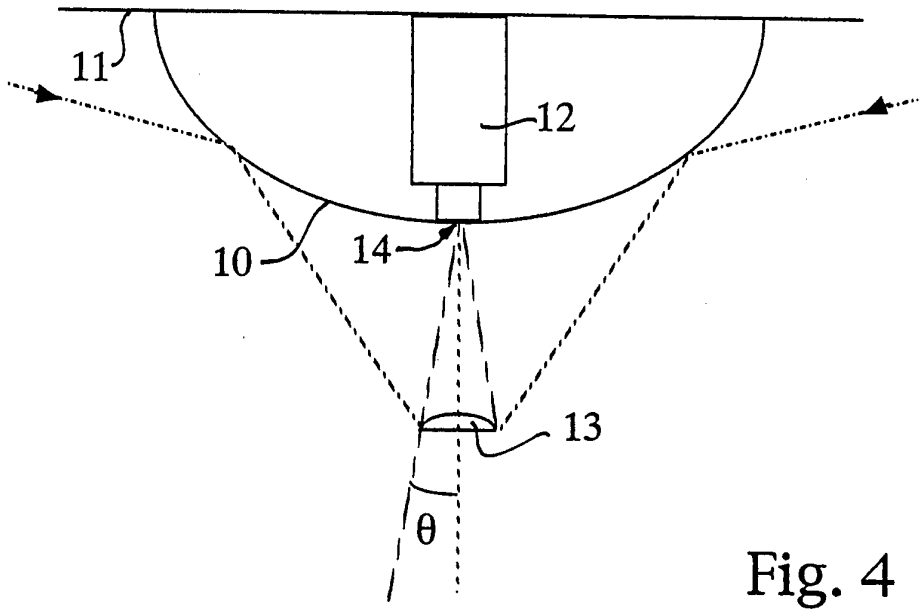

Fig. 4

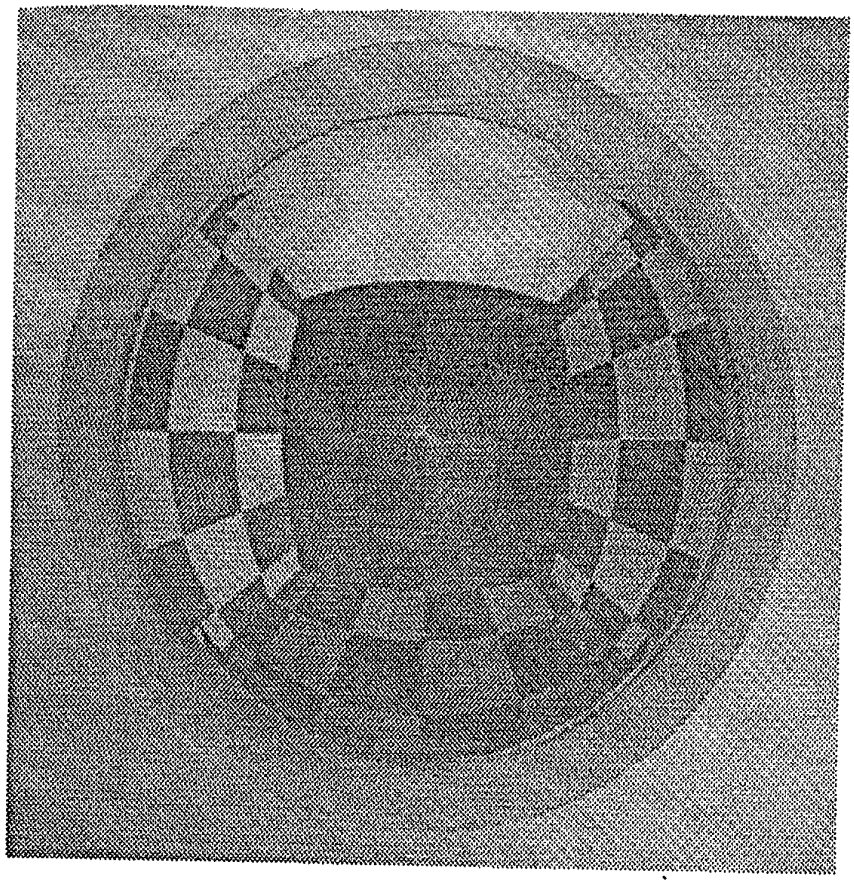

Fig. 5

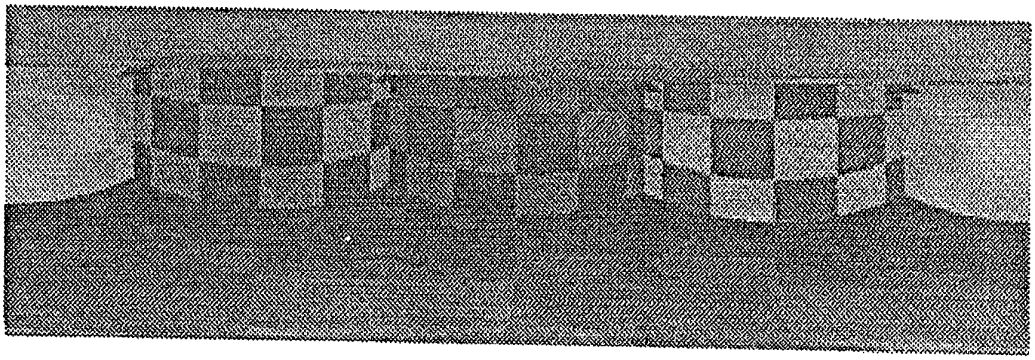

Fig. 6

INTERNATIONAL SEARCH REPORT

International application No.
PCT/AU 94/00501

A. CLASSIFICATION OF SUBJECT MATTER

Int. Cl.[6] G08B 13/18, H04N 5/232

According to International Patent Classification (IPC) or to both national classification and IPC

B. FIELDS SEARCHED

Minimum documentation searched (classification system followed by classification symbols)
IPC G08B 13/18, H04N 5/232

Documentation searched other than minimum documentation to the extent that such documents are included in the fields searched
AU : IPC as above

Electronic data base consulted during the international search (name of data base, and where practicable, search terms used)
DERWENT : MIRROR OR CAMERA OR REFLECT:
JAPIO : MIRROR OR CAMERA OR REFLECT:

C. DOCUMENTS CONSIDERED TO BE RELEVANT

Category*	Citation of document, with indication, where appropriate, of the relevant passages	Relevant to Claim No.
Y	GB,A, 2080945 (GUSCOTT) 10 February 1982 (10.02.82) See page 3 lines 5-16 and figure 9.	1-15
Y	Patents Abstracts of Japan, P 277, page 63, JP,A, 59-24228 (MATSUSHITA DENKO K.K.) 7 February 1982 (07.02.82)	1-15
Y	US,A, 4514630 (TAKAHASHI) 30 April 1985 (30.04.85) See column 1 line 56 - column 2 line 43 and figure 2.	1-15
Y	US,A, 4499490 (MORGAN) 12 FEBRUARY 1985 (12.02.85) See column 1 line 46 - column 2 line 4 and figure 1.	1-15

[X] Further documents are listed in the continuation of Box C.

[X] See patent family annex.

* Special categories of cited documents :

"A" document defining the general state of the art which is not considered to be of particular relevance

"E" earlier document but published on or after the international filing date

"L" document which may throw doubts on priority claim(s) or which is cited to establish the publication date of another citation or other special reason (as specified)

"O" document referring to an oral disclosure, use, exhibition or other means

"P" document published prior to the international filing date but later than the priority date claimed

"T" later document published after the international filing date or priority date and not in conflict with the application but cited to understand the principle or theory underlying the invention

"X" document of particular relevance; the claimed invention cannot be considered novel or cannot be considered to involve an inventive step when the document is taken alone

"Y" document of particular relevance; the claimed invention cannot be considered to involve an inventive step when the document is combined with one or more other such documents, such combination being obvious to a person skilled in the art

"&" document member of the same patent family

Date of the actual completion of the international search	Date of mailing of the international search report
6 December 1994 (06.12.94)	13 Dec 1994 (13.12.94)

Name and mailing address of the ISA/AU

AUSTRALIAN INDUSTRIAL PROPERTY ORGANISATION
PO BOX 200
WODEN ACT 2606
AUSTRALIA

Facsimile No. 06 2853929

Authorized officer

M. DIXON

Telephone No. (06) 2832194

C(Continuation). DOCUMENTS CONSIDERED TO BE RELEVANT		
Category*	**Citation of document, with indication, where appropriate of the relevant passages**	**Relevant to Claim No.**
Y	AU,B, 39249/89 (614406)(ALCATEL N.V.) 22 February 1989 (22.02.89) See page 2 lines 10-26 and figure 1.	1-15
Y	AU,B, 41163/72 (469994) (TELESPHERE TECHNOLOGY INC) 18 October 1973 (18.10.73) See page 5 lines 6-25 and figure 1.	1-15

INTERNATIONAL SEARCH REPORT
Information on patent family member.

International application No.
PCT/AU 94/00501

This Annex lists the known "A" publication level patent family members relating to the patent documents cited in the above-mentioned international search report. The Australian Patent Office is in no way liable for these particulars which are merely given for the purpose of information.

Patent Document Cited in Search Report	Patent Family Member					
GB 2080945	AU	73361/81	CA	1175525	DE	3129753
	FR	2487554	IT	1144440	JP	57057391
	US	4375034				
US 4514630	JP	57122634	WO	8202609	EP	69782
AU 39249/89	DE	3827928	SI	9300167	WO	9319751
AU 41163/72	BE	782265	CA	967279	DE	2218750
	FR	2135010	GB	1368538	NL	7205216
	US	3732368				
						END OF ANNEX