Feb. 19, 1957 L. T. MARSH ET AL 2,782,396

BURGLAR ALARM SYSTEM FOR AUTOMOBILES

Filed June 25, 1953

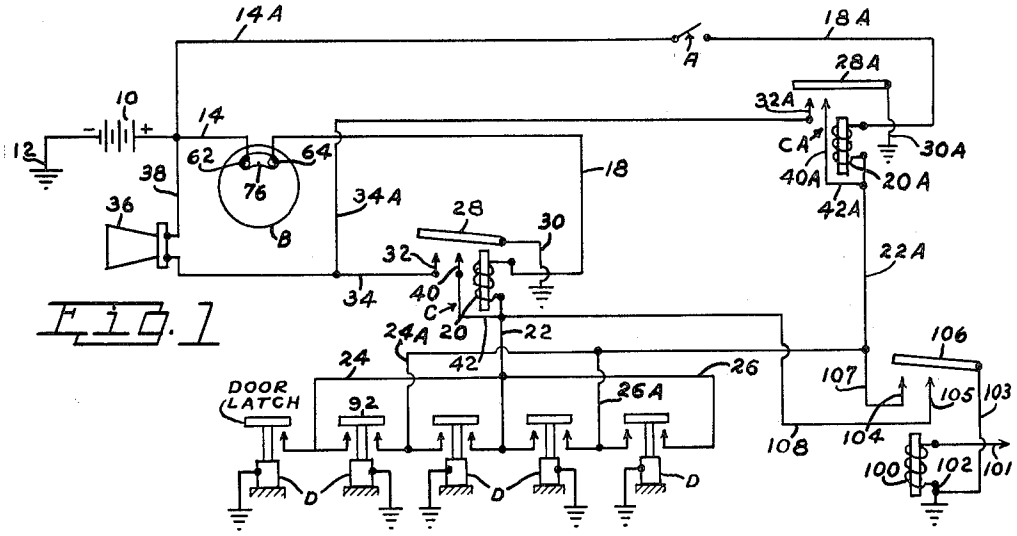

Fig. 1

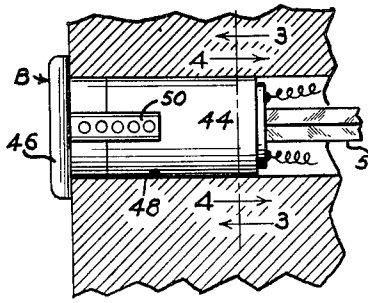

Fig. 2

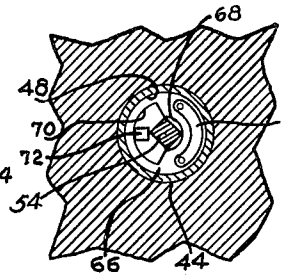

Fig. 3

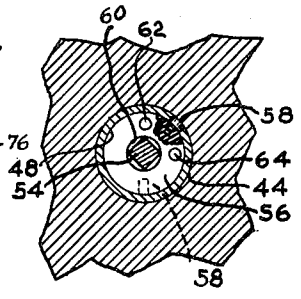

Fig. 4

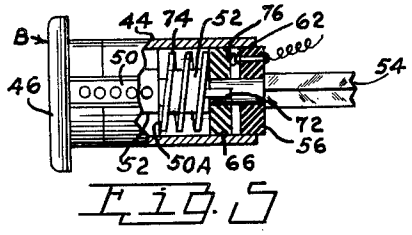

Fig. 5

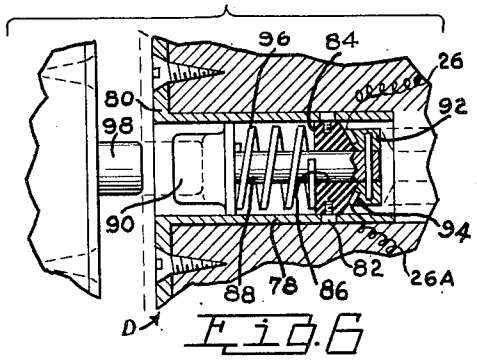

Fig. 6

INVENTORS
LESTER T. MARSH
HUGH P. MARSH

BY

J. B. Dickman Jr.
ATTORNEY

United States Patent Office 2,782,396 Patented Feb. 19, 1957

2,782,396

BURGLAR ALARM SYSTEM FOR AUTOMOBILES

Lester T. Marsh, Shenandoah, Va., and Hugh P. Marsh, Washington, D. C.

Application June 25, 1953, Serial No. 363,976

2 Claims. (Cl. 340—63)

This invention relates to a burglar alarm system adapted to be connected to the conventional electrical system of a motor driven vehicle.

The primary object of the invention is to protect the user of the vehicle against theft.

Another object is to set the system for operation by the simple act of turning off the ignition of the vehicle and/or locking a door thereof.

In the drawing:

Figure 1 is a wiring diagram showing the application of this burglar alarm to a conventional motor driven vehicle of the gasoline driven type.

Figure 2 is a fragmentary sectional view through a portion of the vehicle showing the key actuated closer of the invention.

Figure 3 is a sectional view taken substantially on the line 3—3 of Figure 2, looking in the direction of the arrows.

Figure 4 is a view similar to Figure 3 taken substantially on the line 4—4 of Figure 2, looking in the direction of the arrows.

Figure 5 is a side view partly in section of the lock shown in Figure 2, and

Figure 6 is a longitudinal, sectional view through a circuit breaker of this invention.

Referring to the drawing in detail a conventional vehicle battery 10 has one terminal grounded in a conventional manner as at 12, while its opposite plus terinal, besides being connected to a conventional master switch A in a conventional manner is connected from a normally closed point (in off position) on conventional master switch through 18A to coil 20A. A second circuit is connected from 10 through 14 to one side of master switch B located in door lock in such a way as to be closed when the door lock is turned to locked position by a key, then thru 18 to coil 20.

The contacts of the master switches B and A remote from that which is connected to the conductors 14 and 14A are connected respectively through conductors 18 and 18A with terminals of the coils 20 and 20A of relays or electro-magnetically controlled switches designated generally C and CA. The opposite terminals of coils 20 and 20A are connected through conductors 22 and 22A and branch conductors 24 and 26, and 24A and 26A with one contact of each pair of spaced contacts of each circuit maker D. The opposite contacts of each circuit maker D is grounded as shown and carried by each circuit maker D is a bridging contact which is normally held out of engagement with the spaced contacts but which does move into engagement with the spaced contacts when the portion of the vehicle protected by the respective circuit maker D is moved.

From the foregoing it will be evident that when a protected portion of a vehicle is moved a circuit maker D will be actuated to ground the terminal of the coils 20 and 20A remote from that connected to the conductors 18 and 18A, and if the master switch A is closed

and/or the master switch B is closed, electrical energy will flow through the coil 20 and/or 20A and establish a magnetic field about the coils.

Mounted adjacent the coils 20 and 20A and yieldingly held away from the coils 20 and 20A are armatures 28 and 28A which are connected through conductors 30 and 30A with ground and mounted in the path of movement of the armatures 28 and 28A as they approach the coils 20 and 20A are contacts 32 and 32A which are connected through conductors 34 and 34A respectively with one terminal of a signal 36 such as a horn. The opposite terminal of the signal 36 is connected to the source of electrical energy 10 through a conductor 38. It will thus be seen that upon the energization of the coils 20 and 20A an audible signal will be produced.

In order to sustain the signal even after the portion of the vehicle which has been tampered with has been restored to its original condition, we provide a second contact 40 and 40A which lie in the path of movement of the armatures 28 and 28A and connected through the medium of conductors 42 and 42A with the terminals of the coils 20 and 20A remote from that connected to the conductors 18 and 18A. It will thus be seen that the terminals of the coils 20 and 20A remote from that connected to the conductors 18 and 18A will be grounded through the conductors 42 and 42A, contacts 40 and 40A, armatures 28 and 28A and conductors 30 and 30A and consequently the coils 20 and 20A will remain energized until the master switch A is turned off and/or the master switch B is turned to door unlocking position.

The structure of the master switch B comprises a tubular housing 44 carrying at one end a conventional escutcheon plate 46 which cooperates with any suitable attaching means in holding the tubular body or housing in a bore 48 in the door-lock housing or a selected portion of the vehicle. Fitted into the tubular housing 44 adjacent the escutcheon plate is the barrel 50 of a conventional pin tumbler lock having a conventional key actuated cylinder 52 to which is coupled a conventional lock or switch actuating shaft 54. When this lock is employed to control the master switch B of the vehicle, the shaft 54 is coupled to the movable portion of the master switch B in such a manner that upon rotation of the cylinder the master switch B will be moved to on or off position. When the lock is employed for locking a door of the vehicle the shaft 54 is coupled to a locking bolt so that when the cylinder of the lock is turned, the bolt will be projected or retracted.

Mounted in the tubular housing 44 adjacent the end thereof remote from the escutcheon plate 46 is a disk 56 of non-conducting material which is held in said housing and against rotation by radial screws 58. Said disk 56 is provided with an axial opening 60 to accommodate the shaft 54, and carried by said disk are circumferentially spaced contacts 62 and 64. Mounted within the tubular housing 44 for rotation about the shaft 54 adjacent the disk 56 is a disk 66 of non-conducting material having an axial opening 68 extending therethrough for accommodating the shaft 54. Extending through the disk 66 and communicating with the axial opening 68 is a segmental opening 70 for receiving an actuating lug 72 carried by the cylinder 52. A compression coiled spring 74 is contained within the housing 44 and one end thereof bears on the flange 50A of barrel 50 while its opposite end bears on the disk 66 so as to urge the disk 66 into contact with the disk 56. A bridging contact 76 is carried by the disk 66 on the side thereof adjacent the disk 56 for engaging and bridging the contacts 62 and 64 in one position of the cylinder 52 while disengaging said contacts in another position of said cylinder. In no instance is either of the contacts 62, 64

or 76 connected to the ground but when in use the contacts 62 and 64 of the master switch B are connected in bridge 76.

Each circuit closer D comprises a tubular body 78 carrying adjacent one end an escutcheon plate 80 which is adapted to be attached to a portion of the vehicle to be protected. Mounted in the tubular body 78 intermediate the ends thereof as by screws 82 is a disk 84 of non-conducting material having an axial opening 86 extending therethrough. A plunger 88 is mounted to move through the opening 86 and carried adjacent the ends of the tubular housing 78 adjacent the escutcheon plate 80 and a head 90. A collar 92 of conducting material is carried by the plunger 88 adjacent the end thereof remote from the head 90 and carried by the disk 84 on the side thereof adjacent the collar 92 are contact points 94 which are adapted to be connected through conductors 26 and 26A, thence to 22 and 22A to the coils 20 and 20A of the relays C and CA. The collar 92 is grounded through the plunger 88, head 90 and tubular housing 78. A compression coiled spring 96 encircles the plunger 88 and bears on the disk 84 and head 90 to yieldingly urge the head toward the escutcheon plate 80 and the collar 92 into engagement with the contact points 94. Carried by a cooperating element of the protected portion of the vehicle is a presser element 98 which when the protected portion of the vehicle is in normal position enters the tubular housing 78 and engages the head 90 to move the plunger 98 and collar 92 against the effort of the spring 96 and hold the collar 92 out of engagement with the contact ring 94. Thus it will be seen that even though the circuit is enclosed through the master switch A or through the master switch B no signal will be given until a collar 92 of one of the contact makers D engages the contact points 94 of its respective contact maker. As soon however as a presser element 98 is disengaged from the head 90 of its respective contact maker D, a circuit through the coils 20 and 20A will be completed, thereby moving the armatures 28 and 28A and closing the circuit through the signal horn 36. Simultaneously with the closing of the circuit through the signal horn 36, contact is made between the contacts 40 and 40A and armatures 28 and 28A, thus grounding the coils 20 and 20A through the conductors 30 and 30A and holding the coils grounded until the circuit is broken by operating either the master switch B or master switch A.

The combination door-lock and master switch B are so constructed as subsequent action on the part of bar 54 (without use of key) does not in any way open master switch B.

A relay 100 in the circuits serve the same as contact makers D to ground the systems, conductor 101 contacts the relay 100 to the coil of the motor at the ignition switch terminal, the relay being grounded by conductors 102 and 103. Contact point 104 is connected by conductor 107 to 22A, contact point 105 being connected to conductor 108 to conductor 22.

When current is supplied to coil of motor by connecting wires, relay 100 is energized through conduit 101. This causes the bar 106 to be drawn in contact with contacts 104 and 105, thus grounding both circuits, the signal will be sounded if master switch A and/or B is in closed position.

From the above description it can be seen that:

1. The two circuits give double protection in that they work independently of each other even though they protect the same points by using separate terminals in the same contact maker D.

2. In case of mechanical failure of one circuit intentional or otherwise, the other is not affected as to operation.

3. Failing to lock door (master switch) does not affect the protection provided by the act of removing key from master switch (ignition).

4. If entry is made without opening locked doors or other protected point, the door circuit offers protection to all points even though the wires to the master switch (ignition) are severed.

Obvious changes in detail and construction may be made without departing from the spirit of the invention.

What is claimed is:

1. In a burglar alarm for a motor vehicle having a battery, a door lock, an ignition switch lock and a plurality of closure means, an alarm, an alarm circuit connected to said battery for operation of said alarm through two parallel grounding branches, a manual setting switch and a relay switch in series in one grounding branch, an automatic setting switch responsive to operation of said door lock to locking position and a second relay switch in series in said other grounding branch, a switch operated by each of said closure means having a contact connected in parallel to each of said relay switches for simultaneous operation of both relay switches in response to opening of any closure, said branches being in parallel, will operate the alarm circuit independently whenever their setting switch is set.

2. A burglar alarm system as defined in claim 1, and a third relay switch having a contact connected to each of said two relay switches in parallel with said other contacts for operating said relay switches in response to shorting of the locked ignition switch.

References Cited in the file of this patent

UNITED STATES PATENTS

1,905,110	Kulicke	Apr. 25, 1933
2,022,991	Walter	Dec. 3, 1935
2,121,671	Schwarze	June 21, 1938
2,238,246	Chapel	Apr. 15, 1941
2,515,044	Kappel	July 15, 1941
2,594,196	Moledsky	Apr. 22, 1952