Dec. 29, 1936. W. H. MAYNARD 2,066,118

WINDOW VENTILATOR

Original Filed Oct. 11, 1934

Fig. 1

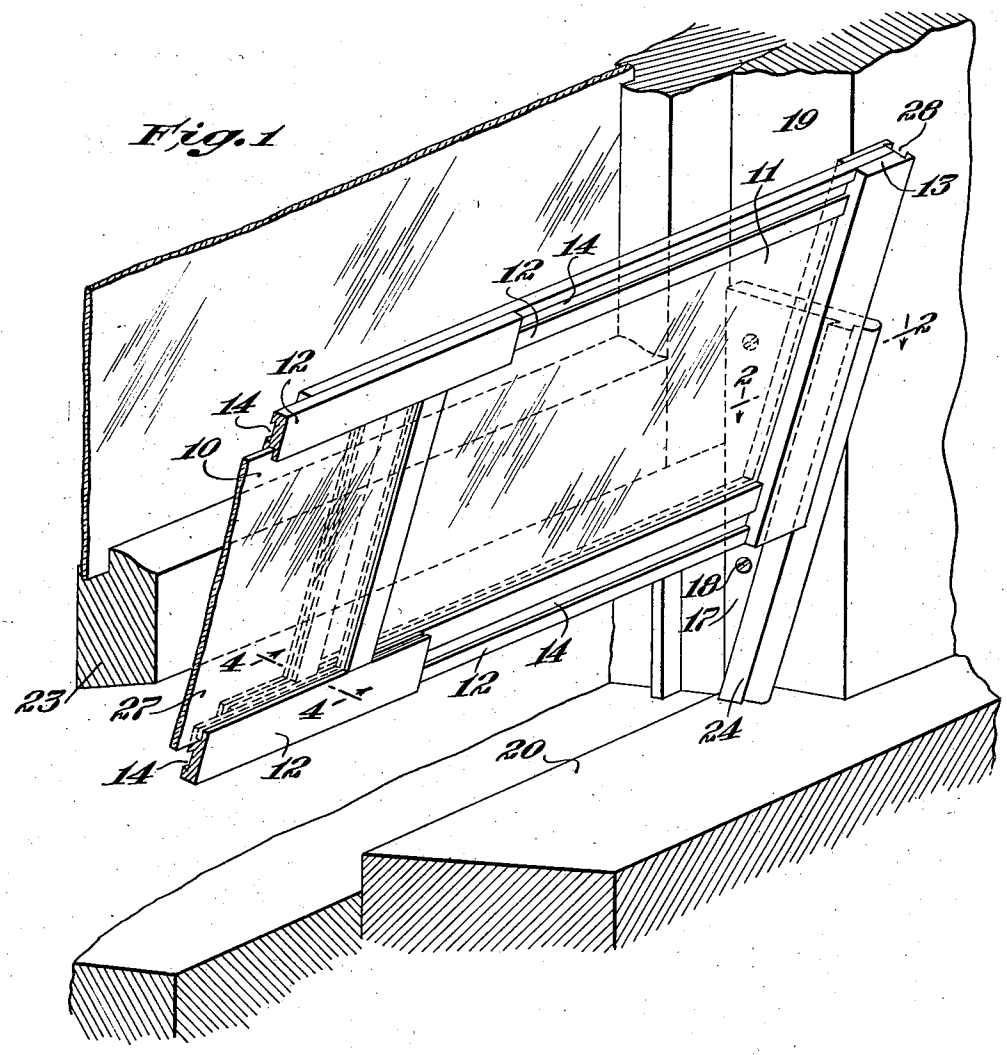

Fig. 2

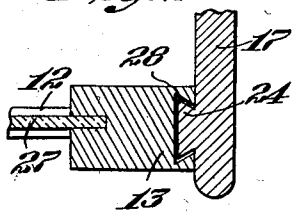

Fig. 3

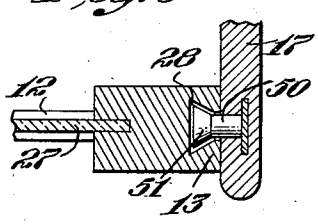

Fig. 4

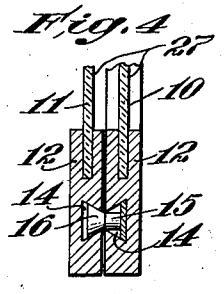

Inventor
William H. Maynard
by Roberts, Cushman & Woodberry
Att'ys.

Patented Dec. 29, 1936 2,066,118

UNITED STATES PATENT OFFICE

2,066,118

WINDOW VENTILATOR

William H. Maynard, Winooski, Vt., assignor to Porter Screen Company, Winooski, Vt., a corporation of Vermont

Original application October 11, 1934, Serial No. 747,908. Divided and this application July 19, 1935, Serial No. 32,204

3 Claims. (Cl. 98—99)

My invention relates to extensible window ventilators and more particularly to novel and efficient means for removably supporting such ventilators in a window opening, this application being a division of my copending application Serial No. 747,908, filed October 11, 1934, now matured into Patent No. 2,014,974.

An adjustable window ventilator of the type illustrated in Fig. 1 of the accompanying drawing is disclosed and described in my Patent No. 2,014,454, application for which was filed October 6, 1933. Such a ventilator comprises two connected sliding sections which are arranged for relative movement so that the structure may be extended or collapsed to fit any size window or opening, and when not in use the structure may be entirely collapsed for storage. It is desirable to provide means for supporting such a ventilator in an opening so that it will not and can not be accidentally collapsed to fall away from its supporting means.

The principal object of my invention is to provide supporting means adapted to prevent accidental collapsing of the sliding sections of an extensible window ventilator.

A further object of my invention is to provide supporting means adapted to prevent accidental collapsing of an extensible ventilator and also adapted to permit the ventilator to be removed from the window or other opening when not in use.

A further object is to provide supporting means for an extensible window ventilator.

Other objects relate to the construction and mode of operation and will be apparent from a consideration of the following description and the accompanying drawing which exemplifies different embodiments chosen for the purpose of illustration.

In the drawing:

Fig. 1 is a perspective view of an extensible window ventilator and one form of supporting means embodying my invention;

Fig. 2 is an enlarged section taken on the line 2—2 of Fig. 1, with parts broken away;

Fig. 3 is a sectional view similar to Fig. 2, but showing another embodiment of supporting means with parts broken away; and

Fig. 4 is an enlarged section taken on the line 4—4 of Fig. 1.

In the embodiment herein shown for the purpose of illustration the extensible ventilator is comprised of two relatively movable sections 10 and 11 in sliding face-to-face relation. The frame of each section is formed of two longitudinal frame elements 12—12 with a transverse frame element 13 at its outer end. Each section holds a pane of glass 27 so that the ventilator will not exclude light from the room. The inner faces of the longitudinal frame elements 12—12 are each provided with undercut grooves 14 (see Figs. 1 and 4).

The two sections of the ventilator are slidably secured to each other by means of a stud 15 (see Fig. 4), one end of which is firmly secured in the groove 14 of one longitudinal frame element, the other end of the stud 15 has an enlarged head 16 adapted to slide freely in the undercut groove 14 of the opposite longitudinal frame element of the other section. Ordinarily at least four such studs are used, one near each end of each longitudinal frame element of one section. A ventilator thus assembled provides an efficient, easily operable extensible structure.

A pair of end-supporting members or end plates 17 are firmly secured by means of screws 18 to the inner sides 19 of the window casing with their lower ends resting on the window-sill 20. Only one of these supporting members is shown in Fig. 1 since only part of the window is shown.

A longitudinal undercut groove 28 is provided on the outer face of each of the transverse frame elements 13 of each ventilator section.

In the embodiment illustrated in Figs. 1 and 2 of the drawing, a dovetail shaped connecting member 24 is provided on the inner face of each end-supporting member 17. These connecting members are of such a cross section that they will freely slide in the respective adjacent longitudinal undercut grooves 28.

In the embodiment illustrated in Fig. 3 of the drawing, a stud 50, having an outstanding enlarged head 51, is secured to the inner face of each end-supporting member. The enlarged heads 51 of the studs are of such a size that they will freely slide in the respective adjacent longitudinal undercut grooves 28. Preferably two or more of such enlarged headed studs are secured to the inner faces of each end-supporting member.

In operation the end-supporting members 17 are fastened to the inner faces 19 of the window frame. The ventilator is extended or collapsed to fit the width of the particular window in which it is to be used, and the connecting members 24 or 50 and 51 are then started in the lower ends of the respective adjacent longitudinal undercut grooves 28 of the transverse frame elements 13; the ventilator is then slowly guided

into place until the lower edge thereof rests upon the window-sill 20, the connecting members during this operation sliding within said longitudinal undercut grooves. In the final position the dovetail shaped connecting members 24 or the enlarged heads 51 of the studs 50 are located within the longitudinal undercut grooves 28 of the transverse frame elements 13 and cooperate therewith to prevent relative face-to-face movement of the movable sections of the ventilator. Air which enters under the open lower sash of the window 23 is directed inwardly and upwardly over the ventilator into the room.

The present disclosure is for the purpose of illustration only, and this invention includes all modifications and equivalents, which fall within the scope of the appended claims.

I claim:

1. An extensible window ventilator comprising end plates for attachment in face-to-face relationship with the inner sides of a window casing, two relatively movable sections in sliding face-to-face relation bridging the space between said plates, said sections comprising side and end frame members fast together at the corners, the outer end frame member of each section having an undercut groove in its outer end face forming overhanging lips therein, said undercut groove extending longitudinally of said outer end face and between and substantially parallel to the planes of the side faces of said outer end frame member, each of said end plates having a connecting member extending from the face thereof adjacent the outer end of the adjoining ventilator section, said connecting member having enlarged portions adjacent said free end, said enlarged portions being adapted to slide in the undercut groove of the adjacent ventilator section and to slidably engage the respective adjacent inner faces of the overhanging lips of said undercut groove.

2. An extensible window ventilator comprising end plates for attachment in face-to-face relationship with the inner sides of a window casing, two relatively movable sections in sliding face-to-face relation bridging the space between said plates, said sections comprising side and end frame members fast together at the corners, the outer end frame member of each section having an undercut groove in its outer end face forming overhanging lips therein, said undercut groove extending longitudinally of said outer end face and between and substantially parallel to the planes of the side faces of said outer end frame member, each of said end plates having a dovetail shaped connecting member extending from the face thereof adjacent the outer end of the adjoining ventilator section, the dove-tail wings of said connecting member being adapted to slide in the undercut groove of the adjacent ventilator section and to slidably engage the respective adjacent inner faces of the overhanging lips of said undercut groove.

3. An extensible window ventilator comprising end plates for attachment in face-to-face relationship with the inner sides of a window casing, two relatively movable sections in sliding face-to-face relation bridging the space between said plates, said sections comprising side and end frame members fast together at the corners, the outer end frame member of each section having an undercut groove in its outer end face forming overhanging lips therein, said undercut groove extending longitudinally of said outer end face and between and substantially parallel to the planes of the side faces of said outer end frame member, each of said end plates having enlarged headed studs extending from the face thereof adjacent the outer end of the adjoining ventilator section, the enlarged heads of said studs being adapted to slide in the undercut groove of the adjacent ventilator section, and to slidably engage the respective adjacent inner faces of the overhanging lips of said undercut groove.

WILLIAM H. MAYNARD.