J. A. HARDEL.

GAS HEATING APPARATUS.

APPLICATION FILED NOV. 26, 1920.

1,410,806.

Patented Mar. 28, 1922.

2 SHEETS—SHEET 1.

Fig. 1

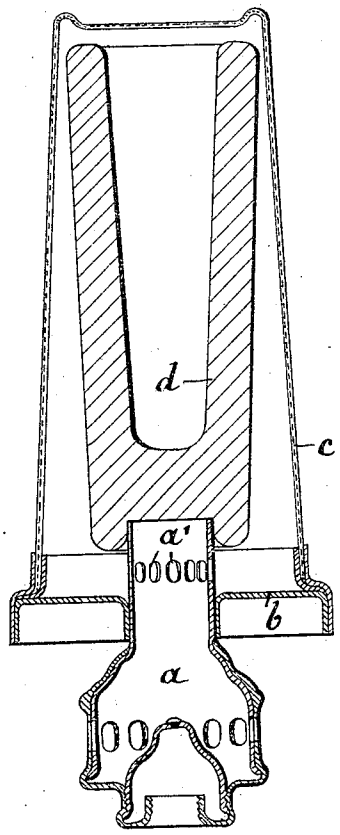

Fig. 2

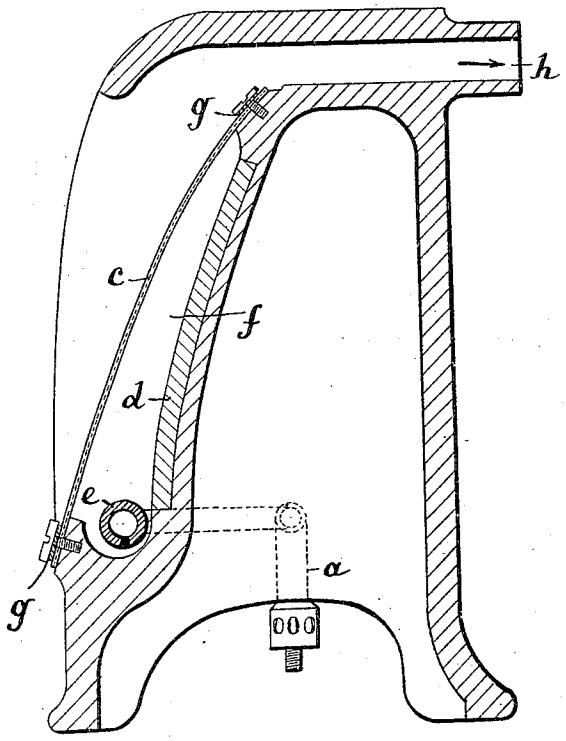

Inventor
Jean Amedee Hardel
by Henry Orth Jr
HHJ

J. A. HARDEL.

GAS HEATING APPARATUS.

APPLICATION FILED NOV. 26, 1920.

1,410,806.

Patented Mar. 28, 1922.

2 SHEETS—SHEET 2.

Fig. 3

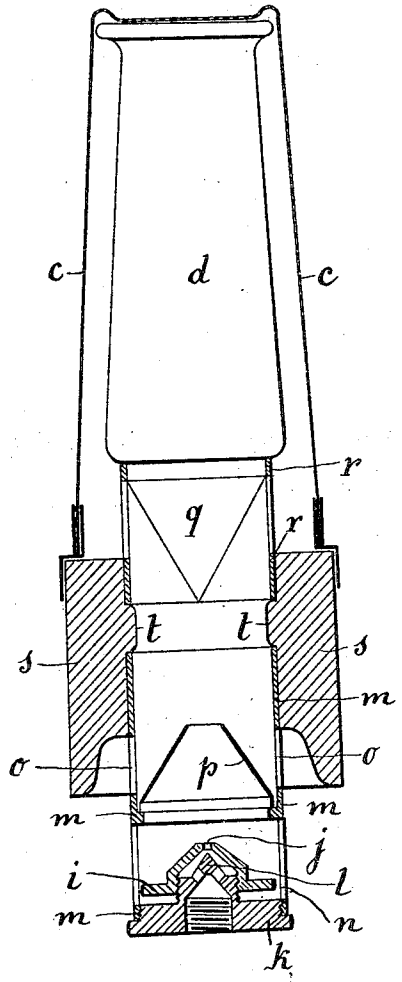

Inventor
Jean Amedee Hardel
by Henry Orth & Sons
Attys

UNITED STATES PATENT OFFICE.

JEAN AMEDEE HARDEL, OF PARIS, FRANCE.

GAS HEATING APPARATUS.

1,410,806. Specification of Letters Patent. Patented Mar. 28, 1922.

Application filed November 26, 1920. Serial No. 426,475.

To all whom it may concern:

Be it known that I, JEAN AMEDEE HARDEL, engineer, citizen of the Republic of France, residing in Paris, France, (and whose post-office address is 63 Boulevard Malesherbes,) have invented certain new and useful Improvements in Gas Heating Apparatus; and I do hereby declare the following to be a full, clear, and exact description of the invention, such as will enable others skilled in the art to which it appertains to make and use the same, reference being had to the accompanying drawings, and to letters or figures of reference marked thereon, which form a part of this specification.

The known gas heating devices have among other inconveniences that of affording a very small radiating surface as compared with the amount of gas consumed, and in the case of apparatus provided with an off-take passage, the products of combustion are caused to draw off a considerable quantity of heat. With devices having no such passage, the products of combustion rise to the upper part of the room; and in both cases the apparatus will radiate but little heat upon its own level.

Moreover, with the greater part of such devices the combustion is incomplete, whereby they are rendered inconvenient and even dangerous, and this circumstance has hitherto prevented the widespread use of this method of heating.

This invention relates to a new form of gas heating apparatus wherein the radiating surface is of a very extensive nature, while at the same time it affords a complete combustion, in such manner that the major part of the heat produced is given out in the form of radiation, whereby the apparatus will give rise to a powerful and efficient heating action around the same.

This invention is characterized in principle in that the combustion takes place at the surface of a wire gauze member, acting as part of the wall of an intake chamber for gas and air mixture, said wire gauze being heated to incandescence and forming the radiating surface of the apparatus.

The accompanying drawing shows embodiments of this invention by way of example.

Fig. 1 is a vertical section of a form of construction of the apparatus.

Fig. 2 is a like section showing a modified form of the same.

Fig. 3 is a section representing an improved apparatus according to this invention.

As shown in the drawings, the apparatus represented in Fig. 1 comprises a Bunsen burner a of the current type, having mounted thereon a washer b; this latter supports a truncated cone or cylinder c of wire gauze, identical with like members employed for miners' safety lamps. The Bunsen burner is caused to enter into said truncated cone shaped member, and it is provided with a set of apertures a^1 of variable form through which the gas may issue from the Bunsen burner. Upon said burner is disposed a member d the shape whereof is clearly shown in Fig. 1, and it is preferably constructed of refractory material.

The operation of this device is as follows:

The mixture of gas and air supplied by said Bunsen burner issues from said apertures a^1 and occupies the interior of the truncated cone c, being guided and distributed over the entire surface of said wire gauze member by the member d. If therefore a lighted match it presented to the outer part of the wire gauze c, the gas will be lighted and it is observed that the combustion will take place in a uniform manner upon the entire surface. It is also remarked that said wire gauze is immediately raised to incandescence and produces an energetic radiation around the same, even where the consumption of gas is very small.

The hereinbefore described apparatus may be employed in an isolated manner, and it has the great advantage that it may be instantly mounted upon the support or tube-shaped extremity supplying the gas to a lighting fixture of any kind, the burner thereof being temporarily removed. Such devices may also be mounted in a row upon the different outlet necks of a gas feeding range. It is especially applicable to gas radiators which are already installed, by substituting the present device for the usual refractory heating members, and this will afford a considerable increase in the heating power of such apparatus.

Fig. 2 relates to another form of construction, affording a radiator of special disposition. In this case the apparatus comprises a gas feeding range e provided with apertures and supplied at one or at both ends thereof by a Bunsen burner a. The said feeding range is disposed within the

chamber *f* the bottom and sides whereof being constituted by the framework of the apparatus and the front part by a wire gauze sheet *c*. This latter is secured in place by means of the strips *g* and suitable screws. Tight fitting can be obtained by the use of asbestos bands. This method of mounting permits of readily replacing the wire gauze member.

An outlet neck *h* provides for the discharge of the burnt gases. The surface *d* of the main framework is disposed in such manner as to secure an even distribution of gas upon the entire surface of the wire gauze. It may be made separately and for instance of moulded refractory earth.

The apparatus thus constructed will operate in the same manner as the device shown in Fig. 1, and it possesses a heating power which is much superior to that afforded by known apparatus, by reason of the considerable incandescent surface which is here provided. On the other hand, the entire combustion is effected upon a surface which is directed towards the side to be heated, thus still further increasing the radiating power. This apparatus can be caused to produce heat with a small consumption of gas.

Fig. 3 represents an improved device having the following characteristics:

Firstly: the gas inlet orifice is adjustable at will by means of milled cap *i* provided with a central orifice *j* and screwed upon the bottom plug *k* which terminates in the pointed portion or needle valve *l*.

In this manner, the milled cap *i* may be operated to control the section of the outlet constituted by the annular space between the orifice *j* in the cap *i* and the needle portion *l*.

Secondly, the tube *m* is provided with two rows of superposed apertures *n* and *o* between which is disposed the truncated cone shaped member *p*. This arrangement has the effect of mixing the gas and air twice in succession, and this mixture is agitated a third time when impinging upon the conical end *q* of member *d* which latter has the form indicated in Fig. 3 and is supported by a tube *r* having therein a plurality of large apertures.

Both the tube *m* and the tube *r* are engaged in a refractory earth body *s* provided with a shoulder *t*. This arrangement has the effect of preventing the heating of the tube *m* so that the fingers can thus come in contact with the milled cap at all times without inconvenience.

It will be understood that the cone *c* could also be made of wire gauze of any appropriate metal, such as iron, copper, nickel, etc.

This invention is not limited to the use of wire gauze properly so called and any suitable perforated surface having an equivalent function may be substituted for the same. In this case the nature of the orifices in the surface is not indifferent; a surface of this kind must operate in the same manner as wire gauze, and without permitting the flame to expand in the interior, and consequently the orifices must be very small.

The apparatus according to this invention may operate not only with illuminating gas, but also with all other suitable combustible gases such as acetylene, water gas, alcohol, gasoline and the like.

The hereinbefore mentioned arrangements are given only by way of example, and all necessary modifications may be made as concerns the shape, size, material or details of construction without departing from the principle of this invention.

I claim—

1. A gas heating device comprising in combination a burner of the Bunsen type, a refractory member mounted above said burner and wire gauze spaced from said refractory member forming a chamber between said member and gauze into which said burner discharges, combustion taking place on the exterior surface of said gauze.

2. A gas heating device comprising in combination a burner, a member of refractory material above the burner, a wire gauze surrounding the refractory material and spaced therefrom, said burner discharging into the chamber between said gauze and member.

3. A gas heating apparatus comprising an external wire gauze casing in form of a reversed cap, a nozzle for the admission of gas, a milled cap screwed on the nozzle for regulating the supply of gas, a tube with two superposed ranges of apertures for the admission of the air, a throttling cone between the two rows of air apertures for intimately mixing the air and the gas, a refractory earth body disposed centrally of the wire gauze casing, a cone at the bottom of the said refractory earth body, and an inlet chamber for the air and gas between the wire gauze casing and the central refractory body.

4. A gas heating apparatus comprising an external wire gauze casing, a nozzle for the admission of gas, regulating means on the said nozzle for varying the admission of gas, a tube located upon said nozzle and provided with two superposed rows of apertures for the supply of air, a throttling member between the two rows of air apertures, a refractory earth ring resting upon the said apertured tube, a second tube with apertures carried by the refractory earth ring, a central refractory earth body inside the wire gauze casing, a cone at the bottom of said body, and an inlet chamber for the air and gas between the refractory earth body and the wire gauze casing.

5. A gas heating device comprising a gas

burner, a frusto-conical member of non-combustible material having its smaller end mounted on the top of said burner a frusto-conical wire net surrounding said member and a support on said burner for the lower larger end of said net, said burner discharging into the tapering chamber between the net and member where the combustion gases are additionally mixed and heated, the combustion taking place on the outer surface of said net.

In testimony that I claim the foregoing as my invention, I have signed my name.

JEAN AMÉDÉE HARDEL.