(19) Europäisches Patentamt
European Patent Office
Office européen des brevets

(11) EP 0 896 110 A2

(12) EUROPEAN PATENT APPLICATION

(43) Date of publication:
10.02.1999 Bulletin 1999/06

(51) Int. Cl.[6]: **E04D 3/36**

(21) Application number: **98114834.9**

(22) Date of filing: **06.08.1998**

(84) Designated Contracting States:
AT BE CH CY DE DK ES FI FR GB GR IE IT LI LU MC NL PT SE
Designated Extension States:
AL LT LV MK RO SI

(30) Priority: **07.08.1997 DE 19734256**
19.02.1998 DE 19807016
27.05.1998 FR 9806661

(71) Applicant: **ISOVER SAINT-GOBAIN**
92400 Courbevoie (FR)

(72) Inventors:
- **Rüchel, Frank Dipl.,-Ing.**
  69221 Dossenheim (DE)
- **Geissels, Alexander Dipl.-Ing.**
  68626 Ladenburg (DE)

(74) Representative:
Bockhorni, Josef, Dipl.-Ing.
Patentanwälte
Herrmann-Trentepohl
Grosse - Bockhorni & Partner,
Forstenrieder Allee 59
81476 München (DE)

(54) Double-layer sheet-metal roof with intermediate thermal insulation out of roll felts

(57) In a double-layer sheet-metal roof with intermediate heat insulation out of roll felts, with a sheet-metal profile support, a sealing layer disposed thereon - if required, insulation material disposed thereon, preferably in form of a roll felt out of mineral wool, and with a sheet-metal profile cover layer disposed thereabove, with spacer profiles between which the roll felts are arranged in cassette-like manner being arranged between said sheet-metal profile support and sheet-metal profile cover layer, said spacer profiles comprise web flanges spaced to said sheet-metal profile cover layer and protruding laterally, which for the purpose of mounting substantially free of heat and/or cold bridge are in knife-like or claw-like engagement through the roll felt side wall directly into the material of the roll felt having no recesses in this area.

EP 0 896 110 A2

Description

[0001] The present invention pertains to a double-layer sheet-metal roof in accordance with the preamble of patent claim 1 as well as to a roll felt for use in a double-layer sheet-metal roof.

[0002] In industrial buildings mainly sheet-metal roofs in double-layer construction are used for reason of their comparatively simple and quick assembly as well as manufacture, and namely in rafter or purlin construction being thermally insulated in that insulation material, roll felts made from mineral wool in particular, is inserted between the two layers of the sheet-metal construction. Sheet-metal roofs of this kind mostly are constructed of sheet-metal profile supports which are fixed to support girders and carry a sealing layer located thereabove, the insulation material and the sheet-metal profile layer as upper layer. Spacer profiles are provided between sheet-metal profile support and sheet-metal profile cover layer, in order to limit the gap between the two layers, in which the insulation material is accommodated. It is disadvantageous that the spacer profiles bridging the two sheet-metal layers create thermal bridges, this essentially worsening the total insulating value of the roof construction. Attempts were made to overcome this problem by using suitable profiles in the bearing or support area of the spacer profiles with respect to the sheet-metal profile cover layer and the sheet-metal profile support, this ,however, causing corresponding mounting expenditure in situ. In addition, in case of unprofessional assembly it is not guaranteed that thermal bridges are safely avoided by means of these auxiliary measurements.

[0003] It is the object of the present invention to create a double-layer thermally insulated sheet-metal roof, for industrial buildings in particular, in which the thermal insulation at most simple assembly and economical manufacture has a construction to a great extent being free of thermal bridges.

[0004] In accordance with the present invention this object is solved by the features contained in the characterizing clause of claim 1, preferred further developed embodiments of the invention being characterized by the features claimed in the subclaims.

[0005] In accordance with the present invention, a construction considerably free of thermal bridges, of the insulation materials located on the roof is guaranteed in that by means of suitable flange formations on spacer profiles a knife-like or claw-like engagement connection with the insulation material is effected by the flange formations directly engaging with the material of the roll felts used preferably. Herein, the roll felts need not be prepared. Rather is the engagement into the soft insulation material effected by displacement of the latter, wherein in a preferred embodiment it is, however, meaningful to provide for a cut without removal of material in order to permit controlled engagement of the flange formations acting as claw. In this case, it is advantageous to mark the position or the presence, respectively, of the cut which can hardly or only with difficulty be seen with the naken eye, by at least one marking line on one of the external surfaces of the roll felt for simplification of assembly. The web flanges herein end with a distance below the sheet-metal profile cover layer so that the insulation material of the roll felt which with its lateral surface is in claw-like engagement with the corresponding flange formation of the spacer profile, in terms of thickness protrudes over the upper web flange. Thereby, also compression of the insulation material between sheet-metal profile cover layer and sheet-metal profile support can be checked and/or controlled, respectively. It is particularly advantageous for this purpose to insert spacer members which may be selectively provided over the length of the spacer profiles and/or web flanges, respectively, and which extend between web flange and sheet-metal profile cover layer and also are screwed on both sides. These spacer members preferably are made from a material having low thermal conductivity, from synthetic material in particular. Because of the different heights of the spacer members, the degree of compression of the insulation materials between the two layers of the sheet metal can be adjusted. Depending on the kind o fuse, it can be meaningful to make the roll felt multi-layered, in particular with different solidity per layer, adjustment of solidity advantageously being effected using the bulking density of the corresponding layer. In a particularly preferable embodiment the distance between sheet-metal profile cover layer and sheet-metal profile support is defined by special screws having a threaded front section with a subsequent thread-free section of greater thickness, having a stop determining the distance as well as behind this further threaded section wiht larger subsequent thread than the threaded front section, serving as abutment for the sheet metal profile layer.

[0006] In the following preferred embodiments of the present invention will be described with reference to the drawing. In the drawing:

Fig. 1	shows a perspective partial view of a double-layer roof of sheets with trapezoidal corrugations of conventional construction as purlin roof, where in the right-hand side of the view the invention is shown.
Fig. 2	shows an enlarged sectional view under line II-II of Fig. 1.
Fig. 3	shows a sectional view through an embodiment with a further spacer element in the form of a special screw, in schematical representation.
Figs. 4 and 5	show views of the special screw of Fig. 3, for the sheet-metal roof in accord-

ance with the present invention.

[0007] Fig. 1 serves for elucidation of the general construction of a double-layer sheet-metal roof in the manner of a roof of sheets with trapezoidal corrugations, referred to as purlin roof. Said roofs consists of sheet-metal profile supports 2 disposed on double T profile girders 1 and preferably screwed therewith or welded thereto, said supports being formed by sheets having spaced trapezoidal reinforcement beads. On this sheet-metal profile support 2 a sealing layer 3 acting as vapor barrier, onto which insulation material 4 is applied in form of mineral wool runs preferably with bulking densities below 50 kg/m^3, in particular in the range of 8 to 40 kg/m^3. The upper end of the sheet-metal roof is formed by the sheet-metal profile cover layers 5 which in analogy with the sheet-metal profile cover 2 are provided as sheets having spaced beads here of trapezoidal shape, below which - if applicable - a further sealing layer 6 can be disposed. Furthermore, said sheet-metal profile cover layer 5 usually is supported with respect to the sheet-metal profile support 2 using Z-shaped spacer profiles 7. Said spacer profiles 7 are screwed to the sheet-metal profile support 2 or the sheet-metal profile cover layer 5, respectively, using their Z flanges. The insulation material 4 for which mainly roll felts are used fills the space between said cover layer 5 and said support 2 and is chambered in cassette-like manner between adjacent spacer profiles 7', of which on the left-hand side only a traditional Z profile is shown.

[0008] In the embodiment shown on the left-hand side under Fig. 1, however, it is disadvantageous that a spacer profile of this kind forms a heat and/or cold bridge, respectively, between said sheet-metal profile cover layer and said sheet-metal profile support, this causing worsening of the over-all thermal insulation value of the roof.

[0009] The view on the right-hand side of Fig. 1 and that of Fig. 2, however, show a double-layer roof of sheets with trapezoidal corrugation, improved in accordance with the present invention, in non-aerated construction and in rafter construction. Herein, for constructionally identical components identical reference numerals as in the conventional embodiment under Fig. 1 have been used. Herein, the spacer profiles ö7 also are made Z-shaped and are fastened with respect to the sheet-metal profile support 2 by screwing of their lower web flange 9. At the upper end of the central web denominated with 11, of the spacer profile 7, which ends with a distance below the sheet-metal profile cover layer 5, the further web flange 12 protrudes in parallel alignment with the sheet-metal profile support 2 and the sheet-metal profile cover layer 5. Said web flange 12 also disposed with a distance below the sheet-metal profile cover layer 5, in the manner of a knife or claw directly engages with the material of the roll felt 4, starting from its lateral surface 13, the roll felt thereby being solidly fixed between adjacent spacer profiles 7. It can be seen that the insulation material or the roll felt 4, respectively, has excess thickness with respect to the height of the spacer profile 7 such that above said spacer profile 7 still insulation material of roll felt 4 is located, which on top reaches above said web flange 12. Thereby it is guaranteed by this kind of fixation of the insulation material that no heat or cold bridge, respectively, will be given between the sheet-metal profile cover layer 5 and the sheet-metal profile support 2. As due to the material the cut is badly visible, it is sensible for assembly purposes to mark the material-internal end of the cut form the outside with a marking. Here it is recommendable to use at least one burnt-in marking line produced on the outside of a surface of the roll felt using hot nozzles.

[0010] The embodiment under Fig. 1 for the sake of elucidation shows a roll felt with uniform material density and solidity, however, also insulation materials, roll felts in particular, having different solidities can be used, the different solidities preferably being effected using differently adjusted bulking densities in corresponding layers of the insulation material. Herein, in particular the area of the insulation material protruding over said web flanges 12 and/or being adjacent thereto is built with increased bulking density and thus increased solidity, whereby the area of increased solidity - if applicable - quasi can serve as spacer between the web flange 12 and the sheet-metal profile cover layer 5. In case of comparatively low bulking density of the entire roll felt 4, however, it is particularly meaningful to bridge the distance between the upper end of said web flange 12 and said sheet-metal profile cover layer 5 using a spacer member 14 which preferably is made from a material with low thermal conductivity, synthetic material in particular. Such a spacer member is shown in enlarged view in Fig. 2 and has a stud or screw sleeve 10 with laterally protruding abutments 16 by which the sheet-metal profile cover layer 5 is supported, the spacer member 14 being screwed with the web flange 12 and the sheet-metal profile cover layer 5. Thus it is guaranteed that the insulation material located above said web flange 12 cannot be compressed and thus again a heat or cold bridge is created. In place of these abutments, also other suitable anchorings can be used, e.g. a cylindrical sleeve penetrated by a stud, for supporting the cover layer.

[0011] In the sense of action control it is advantageous to provide the roll felt 4 with a cut 15 in the area of the engagement of the flange 12, however, without removing material in doing so. This cut preferably is produced using a rotating knife and in its depth is adapted to the width of the flange 12, wherein the upper side of the roll felt can be particularly marked (e.g. print/markings) in the area of the cut (also in case of different solidity).

[0012] By a corresponding adaptation in height of the spacer member 14 it moreover is possible to check and to control compression of the section externally extend-

ing over the web flanges 12, of the roll felt 4, this again having positive effect on the insulation value of the construction.

[0013] Fig. 3 shows a partial section of the sheet-metal roof in purely schematical representation, wherein the spacer member is formed by a screw 17. Said screw 17 herein keeps the sheet-metal profile cover layer 5 at a given distance to the web flange 12 of the spacer profile 7. Further particulars of the special screw 17 herein result from Figs. 4 and 5.

[0014] In accordance with Fig. 4 the screw has a threaded front section 17a which is followed by a thread-free section 17b of greater thickness, which forms a stop shoulder 17c. Between the thread-free section 17b and the screw head 17d provided with a washer 17e, a further threaded section 17f of larger thread thickness than the threaded front section 17a is located. The washer 17e advantageously is captively provided with sealing material. Sealing may also be performed by a separate sealing or washer ring by which a metal to metal contact is avoided. Advantageously, the screw is a self-tapping screw so that no opening must be bored.

[0015] For mounting purposes the sheet-metal profile cover layer 5 is screwed to the web flange 12 using the screw 17. Herein, at first the threaded front section 17a is screwed into the web flange 12, namely up to the stop 17c, wherein at the same time due to the further threaded section 17f the sheet-metal profile cover layer 5 is fixed to a given distance which is determined by the axial distance of the stop 17c to the washer 17e.

[0016] Advantageously, the threaded front section is made longer than the thick threaded section 17f, namely preferably with 1.5 to 2 times the length, the section 17b thickened with respect to the threaded front section 17a having about half the length of the thicker threaded section 17f. In the shown embodiment the head of the screw 17d is embodied as cap bolt, however, also any other screw head is conceivable, e.g. hexagon socket or the like.

Claims

1. A double-layer sheet-metal roof with intermediate heat insulation out of roll felts (4), with a sheet-metal profile support (2), a sealing layer (3) disposed thereon - if required, insulation material disposed thereon, preferably in form of a roll felt out of mineral wool, and with a sheet-metal profile cover layer (5) disposed thereabove, spacer profiles (7) between which the roll felts (4) are arranged in cassette-like manner being arranged between said sheet-metal profile support (2) and sheet-metal profile cover layer (5), characterized in that said spacer profiles (7) comprise web flanges (12) spaced to said sheet-metal profile cover layer (5) and protruding laterally, which for the purpose of mounting substantially free of heat and/or cold bridge are in knife-like or claw-like engagement through the roll felt side wall (13) directly into the material of the roll felt having no recesses in this area.

2. The sheet-metal roof as defined in claim 1, characterized in that the top side of said roll felt (4) is specially marked (prints/markings) in the area of engagement of said web flanges (13).

3. The sheet-metal roof as defined in claim 1 or 2, characterized in that spacer members (14) bridging the distance to said sheet-metal profile cover layer (5) and made from a material preferably with low thermal conductivity are arranged on said web flanges (12), said spacer members preferably being spacer screws.

4. The sheet-metal roof as defined in claim 3, characterized in that said spacer members (14) have laterally protruding abutments (16).

5. The sheet-metal roof as defined in one of the preceding claims, characterized in that said spacer profiles (7) formed with said web flanges (12) are built as Z profiles which with the lower Z flange preferably are screwed to said sheet-metal profile support (2).

6. The sheet-metal roof as defined in one of the preceding claims, characterized in that said roll felts (4) are made with areas of different solidity, namely preferably with two or several layers extending perpendicularly to the central webs (11) of said spacer profiles (7), of preferably different bulking density, and that preferably the area protruding over the horizontal extension of said web flanges (12), of said roll felts (4) is made as area of increased stability.

7. The sheet-metal roof as defined in one of the preceding claims, characterized in that said roll felts (4) have a cut (15) without removal of material in an area of flange engagement.

8. The sheet-metal roof as defined in one of the preceding claims, characterized in that said spacer member is a screw (14, 17) whose threaded front section is followed by a thread-free section of larger diameter, forming a spacer stop.

9. A screw for use in the double-layer sheet-metal roof in accordance with one of the preceding claims, characterized in that said screw (17) comprises a threaded front section (17a) followed by a thread-free section (17b) which forms a stop shoulder (17c), of larger diameter, behind which preferably a further threaded section (17f) with larger thread than the threaded front section (17a) is arranged,

which preferably is followed by the screw head (17d) equipped with a washer (17e).

10. A roll felt out of mineral wool for use in the sheet-metal roof as defined in one of claims 1 to 9, characterized in that said roll felt (4) at least at one lateral marginal surface comprises a cut (5) without removal of material for an engagement connection with a web flange (12).

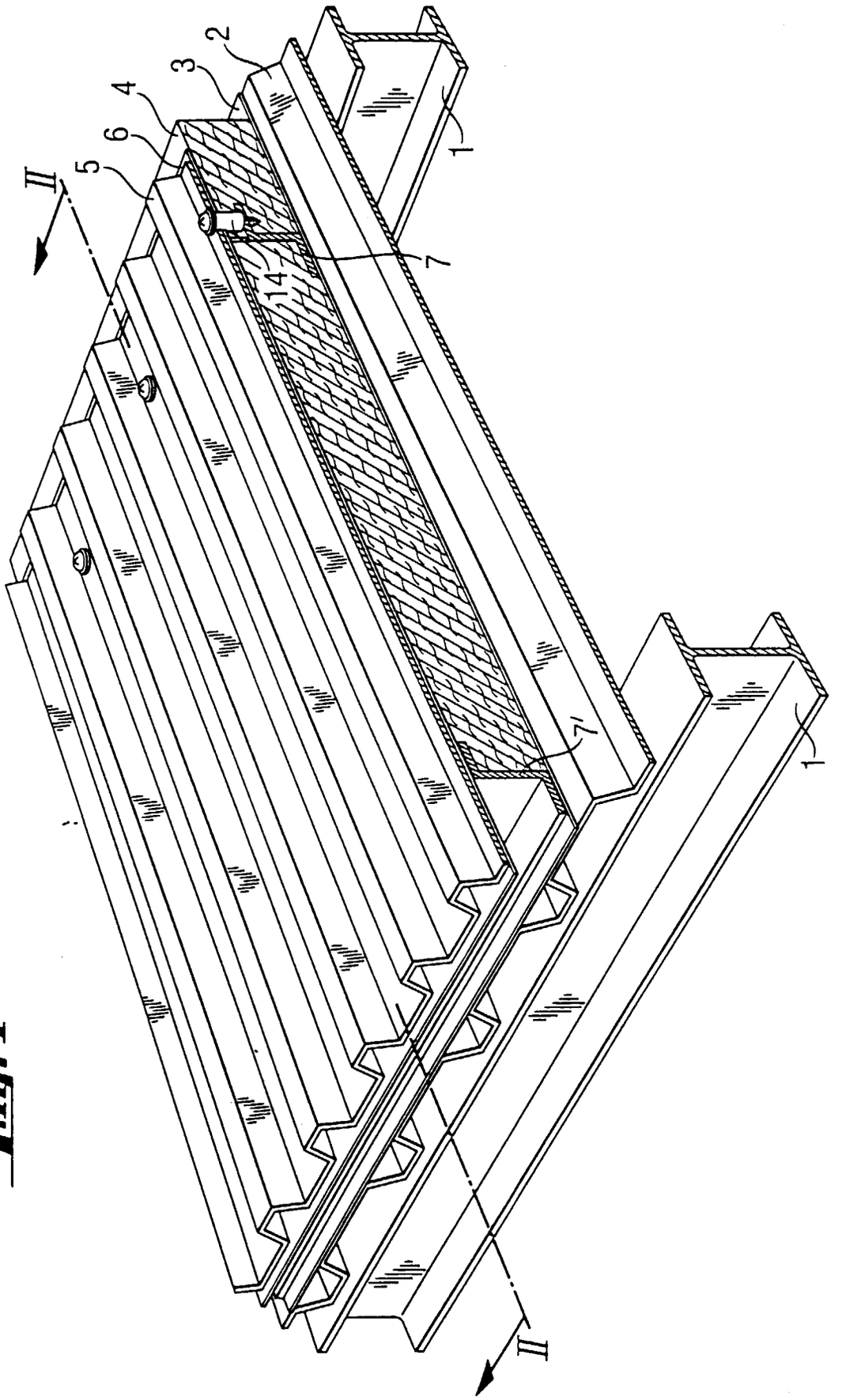

Fig. 1

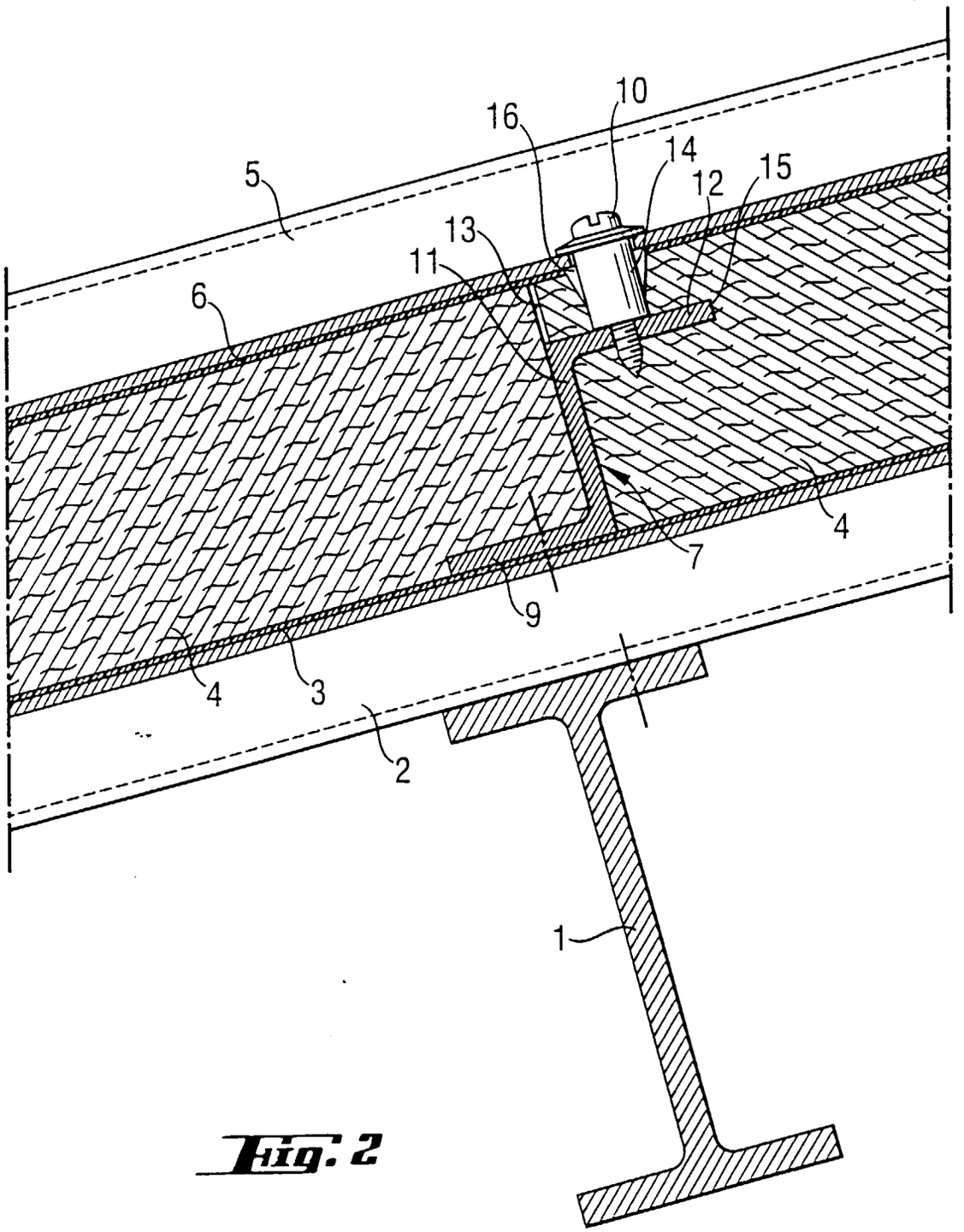

Fig. 2

Fig. 3

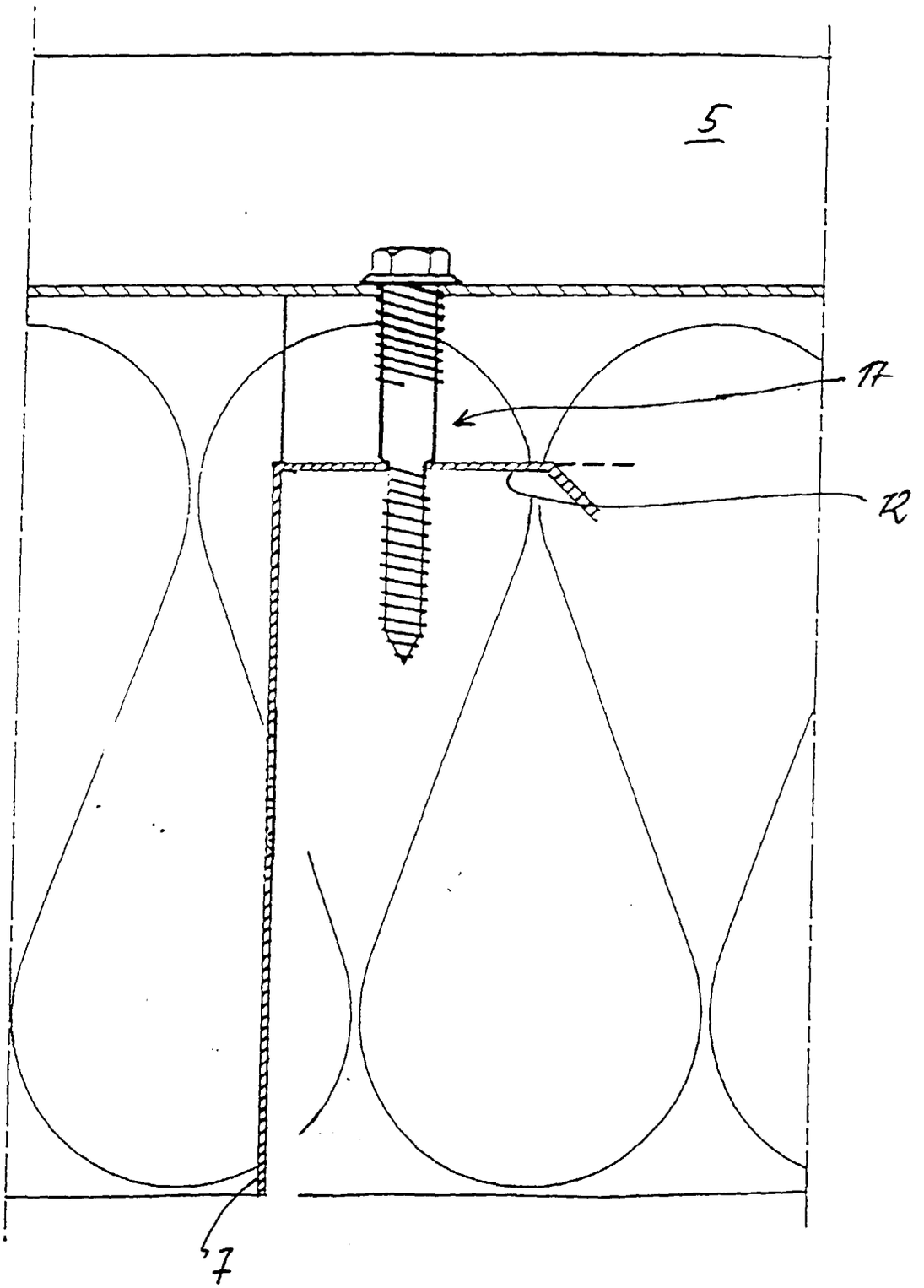

Fig. 4

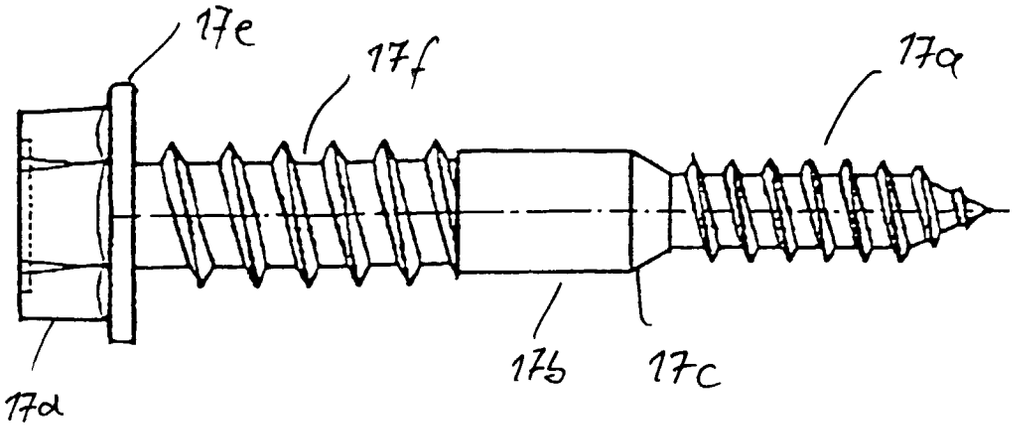

Fig. 5

